ATE New Parts
ATE Neuteile

12/2021

Brakethrough Technology

Erstklassig
First-class

Besser ist besser

Wenn es um Qualität geht, genügt uns ein „sehr gut" noch lange nicht. Wir erfüllen hohe Ansprüche an das Qualitätsmanagement und die europäische Sicherheitsnorm ECE-R90 wird von ATE sogar übertroffen. Zudem führen wir zahlreiche zusätzliche Tests durch, unter anderem zu Verschleiß und Wärmeleistung.

Auch Nachhaltigkeit ist uns wichtig: Wir stellen die Mischungen für ATE Bremsbeläge auf kupferfreie Materialien um und setzen bei ATE Ceramic auf geringen Abrieb. Nutzen ausschließlich umweltfreundliches Material für die Beschichtung von Bremsscheiben. Und bereiten Produkte wie Bremssättel wieder auf.

Better is better

When it comes to quality, "very good" is simply not good enough for us. We meet high standards of quality management – and ATE even exceeds the European safety standard ECE-R90. We also perform many additional tests, including wear and thermal performance.

Sustainability is also important to us: we convert the compounds for ATE brake pads to copperfree materials and opt for low abrasion with ATE Ceramic. We only use environmentally friendly material for the coating of brake discs – and we remanufacture products like brake callipers.

© 2022 Continental Aftermarket & Services GmbH

Höchste Qualität für optimale Leistung.

NEU: SUPER DOT 5.1

Neue Premium-Flüssigkeit ATE SUPER DOT 5.1 mit bester Funktionalität bei heißen wie kalten Einsatzbedingungen: 5 °C höherer Nasssiedepunkt und höheres Wechselintervall als ATE SL.6 bei gleich guter Viskosität, ideal für Fahrzeuge mit modernen Fahrerassistenzsystemen wie ESP®, ABS und ASR.

Große Auswahl für alle Einsatzgebiete

- ATE SL als bewährter DOT 4 Typ, ATE TYP 200 für Rennsportbegeisterte und ATE DOT 3 G für Oldtimer und Fahrzeuge, wo die Verwendung einer DOT 3-Flüssigkeit vom Fahrzeughersteller vorgeschrieben ist
- ATE SL.6 ist optimal für ESP®, ABS und ASR: dünnflüssig auch bei niedrigen Temperaturen, schnelle Reaktionszeit
- Siedepunkte und Viskosität übertreffen gesetzliche und technische Anforderungen
- Schutz vor Korrosion durch hochwertige Additive

Die Eigenschaften von ATE Bremsflüssigkeiten

	Siedepunkt	Nasssiedepunkt	Viskosität bei –40 °C	Wechselintervall
ATE SUPER DOT 5.1	min. 265 °C	min. 180 °C	max. 750 mm²/s	bis 3 Jahre
ATE TYP 200 DOT 4 Racing-Qualität	min. 280 °C	min. 198 °C	max. 1.400 mm²/s	bis 3 Jahre
ATE SL.6 DOT 4 Ideal für ESP®, ABS, ASR	min. 265 °C	min. 175 °C	max. 700 mm²/s	bis 2 Jahre
ATE SL DOT 4	min. 260 °C	min. 165 °C	max. 1.400 mm²/s	bis 1 Jahr
ATE G DOT 3	min. 245 °C	min. 150 °C	max. 1.500 mm²/s	bis 1 Jahr

Zur Erhaltung der Funktionssicherheit der Bremsanlage muss Bremsflüssigkeit entsprechend der vom Fahrzeughersteller vorgegebenen Qualität und in den angegebenen Wechselintervallen ausgetauscht werden.

© 2022 Continental Aftermarket & Services GmbH

Servicegeräte

Natürlich bieten wir auch Geräte für Tests, Entlüftung und Entsorgung von Bremsflüssigkeiten an. Sie arbeiten exakt und zuverlässig, sind leicht zu bedienen und technologisch auf dem neuesten Stand.

Erfahren Sie mehr über ATE Bremsflüssigkeiten auf www.ate.de/bremsfluessigkeit sowie über unsere Servicegeräte auf www.ate-info.de

Typ		ATE Sachnummer	EAN-Nr. 4006633	Gebinde	Paletteneinheit
SUPER DOT 5.1	SAE-Spezifikation, J1704-FMVSS 116/DOT 5.1 ISO Klasse 5-1 – **niedrigviskos**	**706602** 03.9901-6602.2	45757 6	1 l	600 Kannen[2]
		706603 03.9901-6603.2	45759 0	5 l	400 Kannen[3]
		706611 03.9901-6611.2	45761 3	20 l	36 Kannen
TYP 200	SAE-Spezifikation, J1704-FMVSS 116/DOT 4	**706202** 03.9901-6202.2	10825 6	1 l	600 Kannen[2]
		706203 03.9901-6203.2	12166 8	5 l	400 Kannen[3]
		706220 03.9901-6220.2	12780 6	30 l	22 Kannen
SL.6	SAE-Spezifikation, J1704-FMVSS 116/DOT 4 ISO-Klasse 6 – **niedrigviskos**	**706402** 03.9901-6402.2	20746 1	1 l	600 Kannen[2]
		706403 03.9901-6403.2	20748 5	5 l	400 Kannen[3]
		706411 03.9901-6411.2	20750 8	20 l	36 Kannen
		706420 03.9901-6420.2	23120 6	30 l	22 Kannen
		706414 03.9901-6414.2	23005 6	50 l	12 Kannen
		706405 03.9901-6405.2	23121 3	200 l	1 Stück
SL	SAE-Spezifikation, J1704-FMVSS 116/DOT 4	**705801** 03.9901-5801.2	49001 6	1/2 l	1.200 Kannen[1]
		705802 03.9901-5802.2	49002 3	1 l	600 Kannen[2]
		705803 03.9901-5803.2	49003 0	5 l	400 Kannen[3]
		705811 03.9901-5811.2	29907 7	20 l	12 Kannen
		705820 03.9901-5820.2	10824 9	30 l	22 Kannen
		705814 03.9901-5814.2	10366 4	50 l	12 Kannen
		705805 03.9901-5805.2	49005 4	200 l	1 Stück
G	SAE-Spezifikation, J1703-FMVSS 116/DOT 3	**705302** 03.9901-5302.2	10199 8	1 l	600 Kannen[2]
		705303 03.9901-5303.2	10201 8	5 l	400 Kannen[3]

Abweichende Artikelnummern für Lieferländer außerhalb Deutschlands möglich.

Paletteneinheit:
[1] 20 Kannen je Karton
[2] 10 Kannen je Karton
[3] 4 Kannen je Karton

© 2022 Continental Aftermarket & Services GmbH

Top quality for optimum performance.

NEW: SUPER DOT 5.1

The new premium ATE SUPER DOT 5.1 brake fluid with optimum performance in both hot and cold conditions: 5 °C higher wet boiling point than ATE SL.6, same excellent viscosity, longer change interval, ideal for vehicles with advanced driver assistance systems like ESP®, ABS and ASR.

Wide selection for all applications

- ATE SL as a proven DOT 4 grade, ATE TYPE 200 for racing enthusiasts and ATE DOT 3 G for classic cars and vehicles for which the manufacturer specifies a DOT 3 brake fluid
- ATE SL.6 is optimal for ESP®, ABS and ASR: low viscosity even at low temperatures, with a fast reaction time
- Boiling points and viscosities are better than in statutory and technical regulations
- Protection from corrosion by high-grade additives

Properties of ATE brake fluids

	Boiling point	Wet boiling point	Viscosity at –40 °C	Change interval
ATE SUPER DOT 5.1	min. 265 °C / 509 °F	min. 180 °C / 356 °F	max. 750 mm²/s	up to 3 years
ATE TYPE 200 DOT 4 Racing quality	min. 280 °C / 536 °F	min. 198 °C / 388 °F	max. 1,400 mm²/s	up to 3 years
ATE SL.6 DOT 4 Ideal for ESP®, ABS, ASR	min. 265 °C / 509 °F	min. 175 °C / 347 °F	max. 700 mm²/s	up to 2 years
ATE SL DOT 4	min. 260 °C / 500 °F	min. 165 °C / 329 °F	max. 1,400 mm²/s	up to 1 year
ATE G / ATE Blue DOT 3	min. 245 °C / 473 °F	min. 150 °C / 302 °F	max. 1,500 mm²/s	up to 1 year

To maintain the operational reliability and safety of the brake system, you must change the brake fluid in accordance with the vehicle manufacturer's recommendations on quality and at the specified change intervals.

© 2022 Continental Aftermarket & Services GmbH

Service units

Of course we also offer devices for testing, bleeding and disposing of brake fluids. The devices work accurately and reliably, are easy to use and their technology is state-of-the-art.

To learn more about ATE brake fluids go to www.ate.de/bremsfluessigkeit. Information on our service units is available at www.ate-info.de

Type	ATE item code		Language variations	Container	Pallet unit
SUPER DOT 5.1 SAE specification, J1704-FMVSS 116/DOT 5.1 ISO Class 5-1 – **low viscosity**	**706602**	03.9901-6602.2	DE, EN, ES, PT, CN, FR, IT, AR, SE, NL, JP, TH, GR	1 L	600 cans[2]
	706612	03.9901-6612.2	PL, RU, CZ, SK, SLO, HU, BG, KA, HR, SR, RO	1 L	600 cans[2]
	706603	03.9901-6603.2	DE, EN, ES, PT, CN, FR, IT, AR, SE, NL, JP, TH, GR, PL, RU, CZ, SK, SLO, HU, BG, KA, HR, SR, RO	5 L	400 cans[3]
	706611	03.9901-6611.2	DE, EN, ES, PT, CN, FR, IT, AR, SE, NL, JP, TH, GR, PL, RU, CZ, SK, SLO, HU, BG, KA, HR, SR, RO	20 L	36 cans
TYP 200 SAE specification, J1704-FMVSS 116/DOT 4	**706202**	03.9901-6202.2	DE, EN, ES, PT, CN, FR, IT, AR, SE, NL, JP, TH, GR	1 L	600 cans[2]
	706212	03.9901-6212.2	PL, RU, CZ, SK, SLO, HU, BG, KA, HR, SR, RO	1 L	600 cans[2]
	706203	03.9901-6203.2	DE, EN, PL, ES, CN, FR, IT, RO, AR, SE, RU, HR, SR, CZ, SK, SLO, GR, HU, JP, TH, BG, NL, PT, KA, DK, FI, SQ, TR, LV, NO, LT, MS, HY	5 L	400 cans[3]
	706220	03.9901-6220.2	DE, EN, PL, ES, CN, FR, IT, RO, AR, SE, RU, HR, SR, CZ, SK, SLO, GR, HU, JP, TH, BG, NL, PT, KA, DK, FI, SQ, TR	30 L	22 cans
SL.6 SAE specification, J1704-FMVSS 116/DOT 4 ISO Class 6 – **low viscosity**	**706402**	03.9901-6402.2	DE, EN, ES, PT, CN, FR, IT, AR, SE, NL, JP, TH, GR	1 L	600 cans[2]
	706432	03.9901-6432.2	PL, RU, CZ, SK, SLO, HU, BG, KA, HR, SR, RO	1 L	600 cans[2]
	706403	03.9901-6403.2	DE, EN, PL, ES, CN, FR, IT, RO, AR, SE, RU, HR, SR, CZ, SK, SLO, GR, HU, JP, TH, BG, NL, PT, KA, DK, FI, SQ, TR, LV, NO, LT, MS, HY	5 L	400 cans[3]
	706411	03.9901-6411.2	DE, EN, PL, ES, CN, FR, IT, RO, AR, SE, RU, HR, SR, CZ, SK, SLO, GR, HU, JP, TH, BG, NL, PT, KA, DK, FI, SQ, TR, LV	20 L	36 cans
	706420	03.9901-6420.2	DE, EN, PL, ES, CN, FR, IT, RO, AR, SE, RU, HR, SR, CZ, SK, SLO, GR, HU, JP, TH, BG, NL, PT, KA, DK, FI, SQ, TR	30 L	22 cans
	706414	03.9901-6414.2	DE, EN, PL, ES, CN, FR, IT, RO, AR, SE, RU, HR, SR, CZ, SK, SLO, GR, HU, JP, TH, BG, NL, PT, KA, DK, FI, SQ, TR	50 L	12 cans
	706405	03.9901-6405.2	DE, EN, PL, ES, CN, FR, IT, RO, AR, SE, RU, HR, SR, CZ, SK, SLO, GR, HU, JP, TH, BG, NL, PT, KA, DK, FI, SQ, TR	200 L	1 item
SL SAE specification, J1704-FMVSS 116/DOT 4	**705801**	03.9901-5801.2	DE, EN, ES, AR, TH, CN	1/2 L	1,200 cans[1]
	705831	03.9901-5831.2	PL, RO, RU, HR, SLO, KA	1/2 L	1,200 cans[2]
	705802	03.9901-5802.2	DE, EN, ES, PT, CN, FR, IT, AR, SE, NL, JP, TH, GR	1 L	600 cans[2]
	705832	03.9901-5832.2	PL, RU, CZ, SK, SLO, HU, BG, KA, HR, SR, RO	1 L	600 cans[2]
	705803	03.9901-5803.2	DE, EN, PL, ES, CN, FR, IT, RO, AR, SE, RU, HR, SR, CZ, SK, SLO, GR, HU, JP, TH, BG, NL, PT, KA, DK, FI, SQ, TR, LV, NO, LT, MS, HY	5 L	400 cans[3]
	705811	03.9901-5811.2	DE, EN, PL, ES, CN, FR, IT, RO, AR, SE, RU, HR, SR, CZ, SK, SLO, GR, HU, JP, TH, BG, NL, PT, KA, DK, FI, SQ, TR, LV	20 L	12 cans
	705820	03.9901-5820.2	DE, EN, PL, ES, CN, FR, IT, RO, AR, SE, RU, HR, SR, CZ, SK, SLO, GR, HU, JP, TH, BG, NL, PT, KA, DK, FI, SQ, TR	30 L	22 cans
	705814	03.9901-5814.2	DE, EN, PL, ES, CN, FR, IT, RO, AR, SE, RU, HR, SR, CZ, SK, SLO, GR, HU, JP, TH, BG, NL, PT, KA, DK, FI, SQ, TR	50 L	12 cans
	705805	03.9901-5805.2	DE, EN, PL, ES, CN, FR, IT, RO, AR, SE, RU, HR, SR, CZ, SK, SLO, GR, HU, JP, TH, BG, NL, PT, KA, DK, FI, SQ, TR	200 L	1 item
G SAE specification, J1703-FMVSS 116/DOT 3	**705302**	03.9901-5302.2	–	1 L	600 cans[2]
	705303	03.9901-5303.2	–	5 L	400 cans[3]
BLUE SAE specification, J1703-FMVSS 116/DOT 3	**700301**	03.9901-0301.2	–	1/2 L	1,200 cans[2]
	700302	03.9901-0302.2	–	1 L	600 cans[2]

Item codes may be different for countries of delivery other than Germany.

Pallet unit: [1] 20 cans per box, [2] 10 cans per box, [3] 4 cans per box

© 2022 Continental Aftermarket & Services GmbH

EN Table of contents

Index of vehicles	8
Product details	17
Applications of vehicles	71
Technical translations	636

DE Inhaltsverzeichnis

Herstellerverzeichnis	8
Produktdetails	17
Fahrzeugverwendungen	71
Technische Übersetzungen	636

ES Índice

Índice de véhiculos	8
Descripción del producto	17
Aplicaciones	71
Traducciones tecnicas	636

FR Table des matières

Liste des véhicules	8
Présentation du produit	17
Applications	71
Traductions techniques	636

IT Sommario

Indice autovetture	8
Panoramica prodotti	17
Applicazioni autoveicoli	71
Traduzioni tecniche	636

© 2022 Continental Aftermarket & Services GmbH

EN Index of vehicles

DE Herstellerverzeichnis

ES Índice de véhiculos

FR Liste des véhicules

IT Indice autovetture

12/2021

© 2022 Continental Aftermarket & Services GmbH

ABARTH 72
PUNTO 72
PUNTO EVO 72

ALFA ROMEO 72
159 (939_) 72
159 Sportwagon (939_) 72
BRERA (939_) 72
GIULIETTA (940_) 72
GIULIETTA Hatchback Van (940_) 72
SPIDER (939_) 72

AUDI 72
100 C3 Avant (445, 446) 73
100 C3 Saloon (443, 444) 73
100 C4 Avant (4A5) 73
100 C4 Saloon (4A2) 74
80 B3 Saloon (893, 894, 8A2) 72
90 B3 (893, 894, 8A2) 73
A1 (8X1, 8XK) 74
A1 CITY CARVER (GBH) 75
A1 Sportback (8XA, 8XF) 76
A1 Sportback (GBA) 77
A2 (8Z0) 77
A3 (8L1) 78
A3 (8P1) 78
A3 (8V1, 8VK) 80
A3 Convertible (8P7) 84
A3 Convertible (8V7, 8VE) 84
A3 Limousine (8VS, 8VM) 88
A3 Limousine (8YS) 94
A3 Sportback (8PA) 95
A3 Sportback (8VA, 8VF) 97
A3 Sportback (8YA) 102
A4 Allroad B8 (8KH) 103
A4 Allroad B9 (8WH, 8WJ) 103
A4 B5 (8D2) 103
A4 B5 Avant (8D5) 104
A4 B6 (8E2) 104
A4 B6 Avant (8E5) 105
A4 B6 Convertible (8H7) 105
A4 B7 (8EC) 105
A4 B7 Avant (8ED) 105
A4 B7 Convertible (8HE) 106
A4 B8 (8K2) 106
A4 B8 Avant (8K5) 106
A4 B9 (8W2, 8WC) 107
A4 B9 Avant (8W5, 8WD) 108
A5 (8T3) 109
A5 (F53, F5P) 109
A5 Convertible (8F7) 110
A5 Convertible (F57, F5E) 110
A5 Sportback (8TA) 110
A5 Sportback (F5A, F5F) 110
A6 Allroad C6 (4FH) 111
A6 Allroad C8 (4AH) 111
A6 C4 (4A2) 111
A6 C4 Avant (4A5) 112
A6 C5 (4B2) 112
A6 C5 Avant (4B5) 112
A6 C6 (4F2) 113
A6 C6 Avant (4F5) 113
A6 C8 (4A2) 114
A6 C8 Avant (4A5) 114
A7 Sportback (4KA) 114
A8 D2 (4D2, 4D8) 115
A8 D3 (4E2, 4E8) 115
ALLROAD C5 (4BH) 115
CABRIOLET B3 (8G7) 115
COUPE B3 (89, 8B3) 115
Q2 (GAB, GAG) 115
Q3 (8UB, 8UG) 118
Q3 (F3B) 119
Q3 Sportback (F3N) 120
Q5 (FYB, FYG) 122
Q5 Sportback (FYT) 123
Q5 Van (FYB, FYG) 123
Q7 (4LB) 123
Q7 Van (4LB) 123

AUDI 72
TT (8J3) 124
TT (8N3) 124
TT (FV3, FVP) 124
TT Roadster (8J9) 126
TT Roadster (8N9) 126
TT Roadster (FV9, FVR) 127

AUTOBIANCHI 128
Y10 128

BMW 128
1 (E81) 128
1 (E87) 129
1 Convertible (E88) 129
1 Coupe (E82) 129
2 Active Tourer (F45) 130
2 Active Tourer Van (F45) 130
2 Coupe (F22, F87) 130
2 Coupe (G42) 130
2 Gran Tourer (F46) 130
3 (E30) 130
3 (E36) 131
3 (E46) 131
3 (E90) 131
3 (F30, F80) 133
3 (G20, G80, G28) 133
3 Compact (E36) 134
3 Compact (E46) 135
3 Convertible (E30) 135
3 Convertible (E36) 135
3 Convertible (E46) 135
3 Convertible (E93) 135
3 Coupe (E36) 136
3 Coupe (E46) 136
3 Coupe (E92) 137
3 Gran Turismo (F34) 138
3 Touring (E30) 138
3 Touring (E36) 138
3 Touring (E46) 138
3 Touring (E91) 139
3 Touring (F31) 140
3 Touring (G21, G81) 141
3 Touring Van (F31) 142
3 Touring Van (G21) 142
4 Convertible (F33, F83) 142
4 Convertible (G23, G83) 143
4 Coupe (F32, F82) 143
4 Coupe (G22, G82) 143
4 Gran Coupe (F36) 144
4 Gran Coupe (G26) 144
5 (E28) 145
5 (E34) 145
5 (E39) 146
5 (E60) 147
5 (F10) 148
5 (G30, F90) 149
5 Gran Turismo (F07) 150
5 Touring (E34) 151
5 Touring (E39) 151
5 Touring (E61) 152
5 Touring (F11) 153
5 Touring (G31) 154
5 Touring Van (G31) 154
6 (E24) 155
6 (E63) 155
6 Convertible (E64) 155
6 Convertible (F12) 155
6 Coupe (F13) 155
6 Gran Coupe (F06) 156
6 Gran Turismo (G32) 156
7 (E23) 156
7 (E32) 156
7 (E38) 157
7 (E65, E66, E67) 157
7 (F01, F02, F03, F04) 158
7 (G11, G12) 158
8 (E31) 159
8 Convertible (G14, F91) 159

BMW 128
8 Coupe (G15, F92) 159
8 Gran Coupe (G16, F93) 159
i4 (G26) 160
iX (I20) 160
iX3 (G08) 160
X1 (E84) 160
X2 (F39) 161
X3 (E83) 161
X3 (G01, F97) 161
X3 Van (G01) 162
X4 (G02, F98) 162
X5 (E53) 162
X5 (E70) 162
X5 (F15, F85) 162
X5 (G05, F95) 163
X5 Van (G05) 163
X6 (E71, E72) 163
X6 (F16, F86) 164
X6 (G06, F96) 164
X7 (G07) 164
Z1 Roadster 164
Z3 Coupe (E36) 164
Z3 Roadster (E36) 164
Z4 Coupe (E86) 165
Z4 Roadster (E85) 165
Z4 Roadster (E89) 165
Z4 Roadster (G29) 165
Z8 Roadster (E52) 165

CHEVROLET 165
AVEO Hatchback (T300) 165
AVEO Saloon (T300) 166
COBALT 166
CORSA Estate 166
CRUZE Saloon 166
LACETTI (J200) 166
LACETTI Estate (J200) 166
LACETTI Saloon (J200) 166
NUBIRA Estate 166
NUBIRA Saloon 166
ZAFIRA (F75) 167

CHRYSLER 167
DELTA 167
YPSILON 167

CITROËN 167
AMI (9A_) 167
BERLINGO / BERLINGO FIRST Box Body/MPV (M_) 167
BERLINGO / BERLINGO FIRST MPV (MF_, GJK_, GFK_) 168
BERLINGO (ER_, EC_) 169
BERLINGO Box Body/MPV (B9) 169
BERLINGO Box Body/MPV (K9) 170
BERLINGO MULTISPACE (B9) 170
BERLINGO Platform/Chassis (B9) 171
C1 II (PA_, PS_) 171
C2 (JM_) 171
C2 ENTERPRISE (JG_) 171
C3 AIRCROSS II (2R_, 2C_) 174
C3 AIRCROSS II Van (2C_, 2R_) 174
C3 I (FC_, FN_) 172
C3 II (SC_) 172
C3 II Hatchback Van (SC_) 173
C3 III (SX) 173
C3 III Van (SX_, SY_) 174
C3 PICASSO (SH_) 175
C3 Pluriel (HB_) 175
C4 CACTUS 177
C4 CACTUS Van (0B_, 0P_) 178
C4 Coupe (LA_) 178
C4 GRAND PICASSO I (UA_) 179
C4 GRAND PICASSO II (DA_, DE_) 179
C4 I (LC_) 175
C4 I Hatchback Van (LR_) 176
C4 II (NC_) 176

© 2022 Continental Aftermarket & Services GmbH

CITROËN 167

C4 II Hatchback Van (NC_) 176
C4 III (BA_, BB_, BC_) 177
C4 II Saloon (NC_) 177
C4 PICASSO II 180
C4 PICASSO II Van (DD_) 180
C4 PICASSO I MPV (UD_) 180
C4 SPACETOURER (3D_) 181
C4 SPACETOURER Van (3D_) 181
C5 AIRCROSS 182
C5 I (DC_) 181
C5 II (RC_) 181
C5 III (RD_) 181
C5 III Break (RW_) 182
C6 (TD_) 183
C-ELYSEE (DD_) 183
DS3 (SA_) 183
DS3 Convertible 184
DS4 (NX_) 184
DS5 185
EVASION MPV (22, U6) 185
GRAND C4 SPACETOURER (3A_, 3E_) 186
GRAND C4 SPACETOURER Van (3A_, 3E_) 186
JUMPER Bus (230P) 186
JUMPER Bus (244, Z_) 186
JUMPER Platform/Chassis (230) 187
JUMPER Platform/Chassis (244) 187
JUMPER Van (230L) 187
JUMPER Van (244) 187
NEMO Box Body/MPV (AA_) 187
NEMO MPV 187
SAXO (S0, S1) 188
XSARA (N1) 188
XSARA Break (N2) 188
XSARA Coupe (N0) 189
XSARA Estate Van 189
XSARA Hatchback Van (N3_) 190
XSARA PICASSO (N68) 190
ZX Break (N2) 191

CUPRA 191

ATECA (KH7, KHP) 191
BORN (K11) 192
FORMENTOR (KM7) 192
LEON (KL1) 193
LEON Sportstourer (KL8) 194

DACIA 195

DOKKER Express Box Body/MPV 195
DOKKER MPV (KE_) 196
DUSTER (HM_) 197
DUSTER (HS_) 198
DUSTER SUV Van 199
LODGY (JS_) 200
LOGAN EXPRESS (FS_) 202
LOGAN II 201
LOGAN MCV (KS_) 203
LOGAN MCV II 203
LOGAN Pickup (US_) 204
SANDERO 204
SANDERO II 205
SANDERO III 205

DAEWOO 206

ESPERO (KLEJ) 206
GENTRA Saloon 206
KORANDO (KJ) 206
KORANDO Cabrio (KJ) 206
LACETTI Hatchback (KLAN) 206
LACETTI Saloon 206
LACETTI Saloon (J200) 206
LANOS (KLAT) 206
LANOS Saloon (KLAT) 206
NEXIA 207
NEXIA Saloon 207
NUBIRA (J100) 207
NUBIRA Saloon (J100) 207

DAEWOO 206

NUBIRA Saloon (J200) 207
NUBIRA Wagon (J100) 207
NUBIRA Wagon (J200) 207
RACER Hatchback 207

DAIHATSU 207

CUORE V (L7_) 207
CUORE VI (L251, L250_, L260_) 208
CUORE VII (L275_, L285_, L276_) 208
MATERIA (M4_) 208
MOVE (L9_) 208
NAKED 208
SIRION (M1) 208
SIRION (M3_) 208
TREVIS 209
YRV (M2) 209

DS 209

DS 3 (SA_) 209
DS 3 Convertible (SB_) 209
DS 3 CROSSBACK (UR_, UC_, UJ_) 210
DS 4 / DS 4 CROSSBACK (NX_) 210
DS 5 (KF_) 210
DS 7 Crossback (J_) 211

FERRARI 211

208/308 Coupe 211
328 GTB 211
328 GTS 211
MONDIAL 211
MONDIAL Convertible 211

FIAT 211

500 (312_) 211
500 C (312_) 212
500e (332_) 212
500e Convertible (332_) 212
500L (351_, 352_) 212
500X (334_) 212
CROMA (194_) 212
CROMA Estate Van (194_) 213
DOBLO Box Body/MPV (223_) 213
DOBLO Bus (263_) 213
DOBLO Cargo (263_) 213
DOBLO MPV (119_, 223_) 213
DOBLO Platform/Chassis (263_) 213
DUCATO Bus (230_) 214
DUCATO Bus (244_) 214
DUCATO Platform/Chassis (230_) 214
DUCATO Platform/Chassis (244_) 215
DUCATO Van (230_) 215
DUCATO Van (244_) 215
FIORINO Box Body/MPV (225_) 215
FIORINO MPV (225_) 215
FULLBACK Pickup (502_, 503_) 215
GRANDE PUNTO (199_) 216
GRANDE PUNTO Van (199_) 216
IDEA (350_) 216
IDEA Van (350_) 216
LINEA (323_, 110_) 216
PANDA (141_) 216
PANDA (169_) 217
PANDA (312_, 319_) 217
PANDA Hatchback Van (141_) 217
PANDA Hatchback Van (169_) 217
PANDA VAN (312_, 519_) 217
PUNTO (188_) 217
PUNTO (199_) 217
PUNTO EVO (199_) 218
PUNTO EVO Hatchback Van (199_) 218
PUNTO Hatchback Van (199_) 218
QUBO (225_) 218
SEDICI (189_) 219
TIPO Estate (356_) 219
TIPO Hatchback (356_) 219

FIAT 211

TIPO Saloon (356_) 219
ULYSSE (220_) 219
UNO (146_) 220
UNO Van (146_) 220

FORD 220

B-MAX (JK) 220
B-MAX Van (JK) 220
C-MAX (DM2) 220
C-MAX II (DXA/CB7, DXA/CEU) 221
C-MAX II Van 222
COUGAR (EC_) 222
ECOSPORT 223
ESCORT III (GAA) 223
ESCORT III Convertible (ALD) 223
ESCORT III Express (AVA) 223
ESCORT III Turnier (AWA) 223
ESCORT II Turnier 223
ESCORT IV (GAF, AWF, ABFT) 223
ESCORT IV Convertible (ALF) 224
ESCORT IV Express (AVF) 224
ESCORT IV Turnier (AWF, AVF) 224
ESCORT V (AAL, ABL) 224
ESCORT V Convertible (ALL) 224
ESCORT VI (GAL, AAL, ABL) 224
ESCORT VI Convertible (ALL) 224
ESCORT V Turnier (ANL) 224
FIESTA Box Body/MPV (F3L, F5L) 227
FIESTA Box Body/MPV (J5_, J3_) 227
FIESTA Box Body/MPV (JV_) 227
FIESTA Hatchback Van (FVD) 227
FIESTA Hatchback Van (WFVT) 227
FIESTA I (GFBT) 224
FIESTA II (FBD) 225
FIESTA III (GFJ) 225
FIESTA IV (JA_, JB_) 225
FIESTA Saloon 227
FIESTA V (JH_, JD_) 225
FIESTA VI (CB1, CCN) 226
FIESTA VII (HJ, HF) 226
FIESTA VII Van 227
FIESTA VI Van 226
FIESTA V Van 225
FOCUS C-MAX (DM2) 237
FOCUS I (DAW, DBW) 228
FOCUS I Estate Van (DNW) 228
FOCUS II (DA_, HCP, DP) 228
FOCUS II Convertible 229
FOCUS II Estate Van 229
FOCUS III 231
FOCUS III Estate Van 232
FOCUS III Hatchback Van 233
FOCUS III Saloon 233
FOCUS III Turnier 234
FOCUS II Saloon (DB_, FCH, DH) 230
FOCUS II Turnier (DA_, FFS, DS) 230
FOCUS I Saloon (DFW) 228
FOCUS I Turnier (DNW) 228
FOCUS IV (HN) 236
FOCUS IV Saloon (HM) 236
FOCUS IV Turnier (HP) 237
FUSION (JU_) 238
GALAXY I (WGR) 238
GALAXY II (WA6) 238
GALAXY MK II VAN (WA6) 238
GALAXY MK I VAN (WGR) 238
GRAND C-MAX (DXA/CB7, DXA/CEU) 238
GRAND C-MAX Van 239
KA 240
KA (RB_) 240
KA (RU8) 240
KA Van (RB) 240
KUGA I 240
KUGA II (DM2) 241
KUGA III (DFK) 242
KUGA II VAN 241
KUGA I VAN 240
MONDEO I (GBP) 242
MONDEO II (BAP) 242

© 2022 Continental Aftermarket & Services GmbH

FORD 220

MONDEO II Saloon (BFP) 242
MONDEO II Turnier (BNP) 243
MONDEO I Saloon (GBP) 242
MONDEO I Turnier (BNP) 242
MONDEO IV (BA7) 243
MONDEO IV Saloon (BA7) 243
MONDEO IV Turnier (BA7) 243
MONDEO IV Van 244
ORION I (AFD) 244
ORION II (AFF) 244
ORION III (GAL) 244
PUMA (EC_) 244
PUMA (J2K, CF7) 244
RANGER (ER, EQ, R_) 244
RANGER (ET) 245
RANGER (TKE) 245
SCORPIO I (GAE, GGE) 245
SCORPIO II (GFR, GGR) 246
SCORPIO II Turnier (GNR, GGR) 246
SCORPIO I Saloon (GGE) 245
SCORPIO I Turnier (GGE) 246
SIERRA I Hatchback (GBC) 246
SIERRA II (GBG, GB4) 246
SIERRA II Hatchback (GBC, GBG) 247
SIERRA II Turnier (BNG) 247
SIERRA Turnier (BNC) 247
S-MAX (WA6) 247
S-MAX VAN (WA6) 248
STREET KA (RL2) 248
TOURNEO CONNECT 248
TOURNEO CONNECT / GRAND TOURNEO CONNECT V408 MPV 248
TOURNEO COURIER B460 MPV 248
TRANSIT CONNECT (P65_, P70_, P80_) 249
TRANSIT CONNECT MPV 249
TRANSIT CONNECT V408 Box Body/MPV 249
TRANSIT COURIER B460 Box Body/MPV 250
TRANSIT COURIER B460 MPV 250
TRANSIT V363 Bus (FAD, FBD) 250
TRANSIT V363 Platform/Chassis (FED, FFD) 250
TRANSIT V363 Van (FCD, FDD) 251

HONDA 251

ACCORD Hatchback (TF) 253
ACCORD IV (CB) 251
ACCORD IV Aerodeck (CB) 251
ACCORD IV Coupe (CB, CC) 251
ACCORD V (CC, CD) 251
ACCORD V (CE, CF_, CD) 251
ACCORD V Aerodeck (CE) 251
ACCORD V Coupe (CD) 251
ACCORD VI (CK, CG, CH, CF) 252
ACCORD VI Coupe (CG) 252
ACCORD VII (CL, CN) 252
ACCORD VII (CM) 252
ACCORD VII Tourer (CM, CN) 252
AVANCIER (TA) 253
CIVIC IX Saloon (FB) 254
CIVIC VI Aerodeck (MB, MC) 253
CIVIC VI Fastback (MA, MB) 253
CIVIC VI Hatchback (EJ, EK) 253
CIVIC VII Coupe (EM2) 254
CIVIC VII Hatchback (EU, EP, EV) 254
CIVIC VIII Hatchback (FN, FK) 254
CIVIC VIII Saloon (FD, FA) 254
CIVIC VII Saloon (ES, ET) 254
CIVIC VI Saloon (EJ, EK) 253
CONCERTO (HW, MA) 254
CONCERTO Saloon (HWW) 255
CR-V I (RD) 255
CR-V II (RD_) 255
CR-V III (RE_) 255
CR-V IV (RM_) 255
CR-V V (RW_, RT_) 255
ELEMENT (YH) 255
ELYSION (RR) 256
FR-V (BE) 256
INSIGHT (ZE_) 256

HONDA 251

INTEGRA Coupe (DC2, DC4) 256
INTEGRA Coupe (DC5) 256
JAZZ III (GE_, GG_, GP_, ZA_) 256
LEGEND II (KA) 256
LEGEND II Coupe (KA) 256
LEGEND III (KA) 257
ODYSSEY (RL1, RA6, RA_) 257
ODYSSEY MPV (RA_) 257
PRELUDE IV (BB_) 257
PRELUDE V (BB_) 257
S2000 (AP) 257
SHUTTLE (RA) 257
STEPWGN (DBA-RG_) 258
STEPWGN (DBA-RK_) 258
STEPWGN (LA-RF_, UA-RF_) 258
STREAM (RN) 258

HYUNDAI 258

ACCENT IV (RB) 258
ACCENT IV Saloon (RB) 259
ACCENT V Saloon (HC) 259
BAYON (BC3) 259
COUPE I (RD) 259
ELANTRA III (XD) 259
ELANTRA III Saloon (XD) 259
ELANTRA V Coupe (JK) 260
ELANTRA V Saloon (MD, UD) 260
GRAND SANTA FÉ 260
H-1 Cargo (TQ) 260
H-1 Travel (TQ) 260
i10 I (PA) 260
i10 II (BA, IA) 260
i10 III (AC3, AI3) 261
i10 II Saloon 261
i20 ACTIVE (IB, GB) 262
i20 I (PB, PBT) 261
i20 II (GB, IB) 261
i20 II Coupe (GB) 261
i20 II Hatchback Van (GB, IB) 262
i20 III (BC3, BI3) 262
i30 (GD) 263
i30 (PDE, PD, PDEN) 263
i30 Coupe 263
i30 Estate (GD) 263
i30 Estate (PDE) 263
i30 FASTBACK (PDE, PDEN) 263
i30 Hatchback Van (GDE) 264
i30 Hatchback Van (PDE) 264
i30 Kombi Van (GDE, GD) 264
i30 Kombi Van (PDE) 264
i40 I (VF) 264
i40 I CW (VF) 264
i40 I Kombi Van (VF) 265
IONIQ (AE) 265
ix35 (LM, EL, ELH) 265
KONA (OS, OSE, OSI) 265
KONA SUV Van (OS, OSE, OSI) 265
LANTRA I (J-1) 265
LANTRA II (J-2) 265
LANTRA II Estate (J-2) 265
MATRIX (FC) 266
SANTA FÉ II (CM) 266
SANTA FÉ III (DM, DMA) 266
SANTA FÉ II SUV Van (CM) 266
SOLARIS Saloon (HCR) 266
SONATA II (Y-2) 266
SONATA III (Y-3) 266
SONATA IV (EF) 266
TUCSON (TL, TLE) 267
TUCSON SUV Van (TLE) 267
VELOSTER (FS) 267

INFINITI 267

EX 267
FX 267
G Convertible 267
G Coupe 267
G Saloon 268

INFINITI 267

M (Y51) 268
M35 268
M37 268
M45 268
Q50 268
Q60 Convertible 269
Q60 Coupe 269
Q70 (Y51) 269
QX50 I 269
QX50 II 269

ISUZU 269

AXIOM SUV 269
TROOPER II (UB) 270
TROOPER III 270
TROOPER III Open Off-Road Vehicle 270
TROOPER II Open Off-Road Vehicle (UB) 270
VEHICROSS (_U_) 270

JAGUAR 270

E-PACE (X540) 270
F-PACE (X761) 271
I-PACE (X590) 271
XE (X760) 271
XF II (X260) 271
XF SPORTBRAKE (X260) 271
XJ (X300, X330) 272
XJ (X308) 272
XK 8 Coupe (X100) 272

JEEP 272

COMPASS (MP, M6) 272
GRAND CHEROKEE II (WJ, WG) 272
RENEGADE SUV (BU, B1, BV) 272

KIA 272

CADENZA I (VG) 272
CARENS IV 272
CARENS IV Van (A4) 273
CEE'D (JD) 273
CEE'D Combi Van (JD) 273
CEE'D Sportswagon (JD) 273
CEED (CD) 273
CEED Combi Van (CD) 273
CEED Hatchback Van (CD) 273
CEED Sportswagon (CD) 274
JOICE (MTE1P) 274
NIRO (DE) 274
NIRO VAN (DE) 274
OPTIMA (FSGDS6B) 274
OPTIMA (JF) 274
OPTIMA Sportswagon (JF) 274
PICANTO (TA) 275
PRO CEE'D (JD) 275
PRO CEE'D Hatchback Van (JD) 275
PROCEED (CD) 275
PROCEED Combi Van (CD) 275
RIO III (UB) 275
RIO III Hatchback Van (UB) 276
RIO III Saloon (UB) 276
RIO IV (YB, SC, FB) 276
RIO IV Hatchback Van (YB, SC, FB) 277
RIO IV Saloon (SC, FB) 277
SEPHIA (FA) 277
SEPHIA Saloon (FA) 277
SORENTO II (XM) 277
SORENTO II SUV Van (XM) 278
SOUL II (PS) 278
SOUL III (SK3) 278
SOUL III Cargo (SK3) 278
SPORTAGE IV (QL, QLE) 278
SPORTAGE IV VAN (QL, QLE) 279
STONIC (YB) 279
STONIC Hatchback Van (YB) 279
XCEED (CD) 279

© 2022 Continental Aftermarket & Services GmbH

KIA 272
XCEED Van (CD) 279

LANCIA 279
DELTA III (844_) 279
MUSA (350_) 280
Y10 (156_) 280
YPSILON (312_) 280
ZETA (22_) 280

LAND ROVER 280
DEFENDER Station Wagon (L663) 280
DEFENDER Van (L663) 281
DISCOVERY SPORT (L550) 281
DISCOVERY SPORT VAN (L550) 282
DISCOVERY V (L462) 281
DISCOVERY V VAN (L462) 281
FREELANDER 2 (L359) 282
FREELANDER 2 VAN (L359) 282
RANGE ROVER EVOQUE (L538) 282
RANGE ROVER EVOQUE (L551) 282
RANGE ROVER EVOQUE Convertible (L538) 283
RANGE ROVER IV (L405) 282
RANGE ROVER SPORT II (L494) 283
RANGE ROVER VELAR (L560) 283

MASERATI 283
228 283
BITURBO (69, 78, AF3, AM 332) 283
BITURBO Coupe (AM 331) 283
BITURBO Spider (AM 333) 283
KARIF 283

MAZDA 283
121 III (JASM, JBSM) 286
2 (DY) 284
3 (BK) 284
3 (BL) 284
3 Saloon (BK) 285
3 Saloon (BL) 285
5 (CR19) 285
5 (CW) 286
BONGO VAN Van (SK_) 286
B-SERIE (UF) 286
B-SERIE (UN) 286
BT-50 II Pickup (B22, B32, UP, UR) 287
BT-50 Pickup (CD, UN) 287
BT-50 Platform/Chassis (CD, UN) 287

MERCEDES-BENZ 287
/8 (W114) 287
/8 (W115) 287
/8 Coupe (W114) 287
123 Coupe (C123) 287
123 Saloon (W123) 287
123 T-Model (S123) 288
CABRIOLET (W111, W112) 288
C-CLASS (W202) 288
C-CLASS (W204) 288
C-CLASS (W205) 289
C-CLASS Convertible (A205) 289
C-CLASS Coupe (C204) 290
C-CLASS Coupe (C205) 290
C-CLASS T-Model (S202) 290
C-CLASS T-Model (S204) 290
C-CLASS T-Model (S205) 291
CITAN Box Body/MPV (W415) 291
CITAN Box Body/MPV (W420) 291
CITAN Mixto (Double Cabin) (W415) 292
CITAN MPV (W415) 292
CITAN Tourer (W420) 292
CLK (C208) 292
CLK Convertible (A208) 292
CLS (C218) 292

MERCEDES-BENZ 287
CLS (C219) 293
CLS Shooting Brake (X218) 293
COUPE (W111, W112) 293
E-CLASS (W210) 293
E-CLASS (W211) 294
E-CLASS (W212) 294
E-CLASS Convertible (A207) 294
E-CLASS Coupe (C207) 294
E-CLASS T-Model (S210) 295
E-CLASS T-Model (S211) 295
E-CLASS T-Model (S212) 295
eSPRINTER Van (B910) 296
G-CLASS (W461) 296
G-CLASS (W463) 296
G-CLASS Cabrio (W463) 296
GLC (X253) 296
GLC Coupe (C253) 296
GL-CLASS (X164) 297
HECKFLOSSE (W111, W112) 297
M-CLASS (W164) 297
PAGODE (W113) 297
R-CLASS (W251, V251) 297
S-CLASS (W116) 298
S-CLASS (W126) 298
S-CLASS (W220) 298
S-CLASS (W221) 298
S-CLASS Coupe (C126) 299
S-CLASS Coupe (C216) 299
S-CLASS Saloon (W108, W109) 299
SL (R107) 299
SL (R230) 299
SL Coupe (C107) 300
SLK (R170) 300
SPRINTER 2-t Bus (B901, B902) 300
SPRINTER 2-t Platform/Chassis (B901, B902) 300
SPRINTER 2-t Van (B901, B902) 300
SPRINTER 3,5-t Bus (B906) 301
SPRINTER 3,5-t Platform/Chassis (B906) 301
SPRINTER 3,5-t Platform/Chassis (B907, B910) 301
SPRINTER 3,5-t Tourer Bus (B907) 301
SPRINTER 3,5-t Van (B906) 302
SPRINTER 3,5-t Van (B907, B910) 302
SPRINTER 3-t Bus (B903) 302
SPRINTER 3-t Bus (B906) 303
SPRINTER 3-t Platform/Chassis (B903) 303
SPRINTER 3-t Platform/Chassis (B906) 303
SPRINTER 3-t Platform/Chassis (B910, B907) 303
SPRINTER 3-t Tourer Bus (B907) 303
SPRINTER 3-t Van (B903) 303
SPRINTER 3-t Van (B906) 304
SPRINTER 3-t Van (B910) 304
SPRINTER 4,6-t Platform/Chassis (B906) 304
SPRINTER 4,6-t Van (B906) 304
SPRINTER 4-t Bus (B904) 304
SPRINTER 4-t Platform/Chassis (B904) 305
SPRINTER 4-t Platform/Chassis (B907, B910) 305
SPRINTER 4-t Tourer Bus (B907) 305
SPRINTER 4-t Van (B904) 305
SPRINTER 4-t Van (B907, B910) 306
SPRINTER 5-t Platform/Chassis (B907) 306
SPRINTER 5-t Van (B907) 306
SPRINTER CLASSIC 3,5-t Van (B909) 306
SPRINTER CLASSIC 4,6-t Bus (B909) 306
SPRINTER CLASSIC 4,6-t Van (B909) 307
V-CLASS (638/2) 307
VITO Bus (W638) 307
VITO Van (W638) 307
X-CLASS (470) 307
X-CLASS Platform/Chassis (470) 307

MG 307
EXPRESS Hatchback Van 307
MG ZR 307

MINI 307
MINI (F55) 307
MINI (F56) 307
MINI (R50, R53) 308
MINI CLUBMAN (F54) 308
MINI Convertible (F57) 308
MINI Convertible (R52) 308
MINI COUNTRYMAN (F60) 308

MITSUBISHI 308
ASX (GA_W_) 308
ASX Van (GA_W_) 308
ECLIPSE Convertible (D5_A) 308
ECLIPSE III (D5_A) 308
GRANDIS (NA_W) 308
L200 / TRITON (KA_T, KB_T) 309
L200 / TRITON (KJ_, KK_, KL_) 309
L200 / TRITON Platform/Chassis (KA_T, KB_T) 309
L200 Platform/Chassis (MQ) 309
LANCER VII (CS_A, CT_A) 309
LANCER VIII (CY_A, CZ_A) 309
LANCER VIII Sportback (CX_A) 310
PAJERO CLASSIC (V2_W) 311
PAJERO II (V3_W, V2_W, V4_W) 310
PAJERO II (V3_W) 310
PAJERO II Canvas Top (V2_W, V4_W) 310
PAJERO III (V7_W, V6_W) 310
PAJERO III Canvas Top (V6_W, V7_W) 310
PAJERO IV (V8_W, V9_W) 310
PAJERO IV Van (V9_, V8_, V8_V) 311
PAJERO PININ I (H6_W, H7_W) 311
PAJERO SPORT II (KH_, KG_) 311
ZINGER MPV (KB0_A) 311

NISSAN 311
100NX (B13) 311
200SX (S13) 311
300ZX (Z31) 312
ALMERA I (N15) 312
ALMERA I Hatchback (N15) 312
ALMERA II (N16) 312
ALMERA II Hatchback (N16) 312
ALTIMA (L30) 313
ALTIMA (L31) 313
AVENIR (W11) 313
BLUEBIRD (T72 , T12, U12) 313
BLUEBIRD (U11) 313
BLUEBIRD (U13, U14) 313
BLUEBIRD Hatchback (T72, T12) 314
BLUEBIRD Station Wagon (WU11) 314
BLUEBIRD SYLPHY / SYLPHY III (B17) 314
CEDRIC X (Y34) 314
CEFIRO III Saloon (A33) 314
CUBE (Z12) 314
DATSUN 140Y Estate (HLB310) 314
DATSUN 160J (710, A10) 315
DATSUN 180B (PL810) 315
ELGRAND (E50) 315
ELGRAND (E51) 315
ELGRAND (E52) 315
JUKE (F15) 315
JUKE (F16_) 315
JUKE Van (F15) 315
KUBISTAR Van (X76) 315
LAUREL (JC32) 316
MAXIMA / MAXIMA QX IV (A32) 316
MAXIMA / MAXIMA QX IV Station Wagon (A32) 316
MAXIMA / MAXIMA QX V (A33) 316
MURANO I (Z50) 316
MURANO II (Z51) 316
MURANO II VAN (Z51) 316
NAVARA (D21) 317
NAVARA (D22) 317
NP300 NAVARA (D40) 317
NP300 NAVARA Pickup (D23) 317
NP300 NAVARA Platform/Chassis (D40) 317
PATHFINDER III (R51) 317

© 2022 Continental Aftermarket & Services GmbH

NISSAN 311

PATHFINDER III VAN (R51_) 317
PICK UP (720) 317
PICK UP (D21) 318
PRAIRIE (M10, NM10) 318
PRAIRIE PRO (M11) 318
PRIMERA (P10) 318
PRIMERA (P11) 318
PRIMERA (P12) 318
PRIMERA Estate (WP12) 319
PRIMERA Hatchback (P10) 319
PRIMERA Hatchback (P11) 319
PRIMERA Hatchback (P12) 319
PRIMERA Traveller (W10) 319
PRIMERA Traveller (WP11) 320
PULSAR Hatchback (C13) 320
QASHQAI / QASHQAI +2 I (J10, NJ10, JJ10E) 320
QASHQAI / QASHQAI +2 I VAN (J10, JJ10E) 320
QASHQAI II SUV (J11, J11_) 321
QASHQAI II VAN (J11_) 321
QUEST (E52) 321
SENTRA V (B15) 321
SENTRA VII (B17) 321
SERENA (C24) 322
SILVIA (S12) 322
SKYLINE (V36) 322
SUNNY (140Y, 150Y) 322
SUNNY III Hatchback (N14) 322
SUNNY III Liftback (N14) 322
SUNNY Traveller (140Y, 150Y) 322
TEANA I (J31) 322
TIIDA Hatchback (C11) 322
TIIDA Hatchback (C12) 322
TIIDA Saloon (SC11) 322
VANETTE Bus (C22) 322
VANETTE CARGO Van (HC 23) 323
VANETTE Van (C22) 323
X-TRAIL (T32RR) 323
X-TRAIL I (T30) 323
X-TRAIL III (T32_, T32R, T32RR) 323
X-TRAIL III (T32R) 324
X-TRAIL VAN (T32) 324

OPEL 324

ADAM (M13) 324
ASCONA C (J82) 324
ASCONA C Hatchback (J82) 324
ASTRA F (T92) 325
ASTRA F CLASSIC Estate (T92) 325
ASTRA F CLASSIC Hatchback (T92) 325
ASTRA F CLASSIC Saloon (T92) 325
ASTRA F Convertible (T92) 325
ASTRA F Estate (T92) 325
ASTRA F Estate Van (T92) 326
ASTRA F Hatchback (T92) 326
ASTRA G CLASSIC (T98) 326
ASTRA G CLASSIC Caravan (F35) 327
ASTRA G CLASSIC Saloon (T98) 327
ASTRA G Convertible (T98) 327
ASTRA G Coupe (T98) 327
ASTRA G Estate (T98) 327
ASTRA G Estate Van (F70) 327
ASTRA G Hatchback (T98) 328
ASTRA G Saloon (T98) 328
ASTRA H (A04) 328
ASTRA H CLASSIC Estate (A04) 329
ASTRA H CLASSIC Hatchback (A04) 329
ASTRA H CLASSIC Saloon (A04) 329
ASTRA H Estate (A04) 329
ASTRA H Estate Van (L70) 330
ASTRA H GTC (A04) 330
ASTRA H Saloon (A04) 330
ASTRA H TwinTop (A04) 331
ASTRA K (B16) 331
ASTRA K Estate Van 331
ASTRA K Hatchback Van 331
ASTRA K Sports Tourer (B16) 331
CALIBRA A (C89) 332

OPEL 324

COMBO Box Body/MPV 332
COMBO Box Body/MPV (71_) 332
COMBO Box Body/MPV (K9) 332
COMBO Box Body/MPV (X12) 332
COMBO E Tour / Life (K9) 333
COMBO Tour 333
COMBO Tour (X12) 333
CORSA A Hatchback (S83) 333
CORSA A Hatchback Van (S83) 333
CORSA A TR (S83) 334
CORSA B (S93) 334
CORSA B Estate (S93) 334
CORSA B Hatchback Van (S93) 334
CORSA C (X01) 334
CORSA C Hatchback Van (X01) 334
CORSA D (S07) 334
CORSA D Hatchback Van (S07) 335
CORSA E (X15) 335
CORSA E Hatchback Van (X15) 336
CORSA F 336
CORSA F Hatchback Van 336
CROSSLAND X / CROSSLAND (P17, P2QO) 336
CROSSLAND X Van 336
FRONTERA A (U92) 337
FRONTERA A Sport (U92) 337
FRONTERA B (U99) 337
GRANDLAND / GRANDLAND X (A18, P1UO) 337
GRANDLAND X Van 338
INSIGNIA B Country Tourer (Z18) 338
INSIGNIA B Grand Sport (Z18) 338
INSIGNIA B Sports Tourer (Z18) 338
INSIGNIA B Sports Tourer Combi Van (Z18) 338
KADETT E (T85) 339
KADETT E Convertible (T85) 339
KADETT E Estate (T85) 339
KADETT E Estate Van (T85) 339
KADETT E Hatchback (T85) 339
KARL (C16) 339
MERIVA A MPV (X03) 339
MERIVA B MPV (S10) 339
MERIVA B VAN (S10) 339
MOKKA 340
MONTEREY A (M92) 340
MONTEREY B (M98) 340
MONZA A (22_) 340
OMEGA A (V87) 340
OMEGA A Estate (V87) 340
OMEGA B (V94) 341
OMEGA B Estate (V94) 341
ROCKS-E 341
SENATOR A (29_) 341
SENATOR B (V88) 341
SIGNUM Hatchback (Z03) 341
TIGRA (S93) 342
VECTRA A (J89) 342
VECTRA A Hatchback (J89) 343
VECTRA B (J96) 343
VECTRA B Estate (J96) 343
VECTRA B Hatchback (J96) 344
VECTRA C (Z02) 344
VECTRA C Estate (Z02) 345
VECTRA C GTS (Z02) 346
ZAFIRA / ZAFIRA FAMILY B (A05) 347
ZAFIRA A MPV (T98) 347
ZAFIRA B Box Body/MPV (A05) 347
ZAFIRA TOURER C (P12) 347
ZAFIRA TOURER C VAN (P12) 347

PEUGEOT 348

1007 (KM_) 367
106 I (1A, 1C) 348
106 II (1A_, 1C_) 348
106 Van I Hatchback Van (1S_) 348
108 348
2008 I (CU_) 367
2008 II (UD_, US_, UY_, UK_) 367
2008 I Van (CU_) 367

PEUGEOT 348

205 I Convertible (741B, 20D) 348
205 II (20A/C) 348
206 CC (2D) 348
206 Hatchback (2A/C) 348
206 Saloon 349
206 SW (2E/K) 349
207 (WA_, WC_) 349
207 Hatchback Van (WA_, WC_) 350
207 Saloon 351
207 SW (WK_) 351
207 SW Estate Van (WK_) 351
208 Hatchback Van (CR_) 354
208 I (CA_, CC_) 351
208 II (UB_, UP_, UW_, UJ_) 353
3008 MPV (0U_) 368
3008 SUV (MC_, MR_, MJ_, M4_) 368
3008 Van (0U_) 368
3008 Van (MR_, MC_, MJ_) 368
301 354
306 (7B, N3, N5) 355
306 Break (7E, N3, N5) 355
306 Convertible (7D, N3, N5) 356
306 Estate Van (N_, 7_) 356
306 Hatchback (7A, 7C, N3, N5) 356
306 Hatchback Van 357
307 (3A/C) 357
307 Break (3E) 359
307 CC (3B) 359
307 Saloon 359
307 SW (3H) 359
307 SW Estate Van (3E_, 3H_) 360
308 CC (4B_) 361
308 Hatchback Van (LB_) 361
308 I (4A_, 4C_) 360
308 II (LB_, LP_, LW_, LH_, L3_) 360
308 III (FB_, FH_, FP_, F3_) 361
308 SW I (4E_, 4H_) 361
308 SW I Estate Van (4E_) 362
308 SW II (LC_, LJ_, LR_, LX_, L4_) 362
308 SW II Estate Van (LC_) 363
308 SW III (FC_, FJ_, FR_, F4_) 363
405 II (4B) 363
406 (8B) 363
406 Break (8E/F) 364
406 Coupe (8C) 364
407 (6D_) 364
407 Coupe (6C_) 364
407 SW (6E_) 364
407 SW Estate Van (6E_) 364
5008 (0U_, 0E_) 369
5008 II (MC_, MJ_, MR_, M4_) 369
5008 II Van (MC_, MJ_) 370
5008 I Van (0U_) 369
508 I (8D_) 364
508 II (FB_, FH_, F3_) 365
508 SW Estate Van (8E_) 366
508 SW I (8E_) 365
508 SW II (FC_, FJ_, F4_) 366
605 (6B) 366
607 (9D, 9U) 366
806 (221) 366
BIPPER (AA_) 370
BIPPER TEPEE 370
BOXER Bus (230P) 370
BOXER Bus (244, Z_) 370
BOXER Platform/Chassis (244) 370
BOXER Platform/Chassis (ZCT_) 371
BOXER Van (230L) 371
BOXER Van (244) 371
PARTNER Box Body/MPV 371
PARTNER Box Body/MPV (5_, G_) 372
PARTNER Box Body/MPV (K9) 373
PARTNER MPV (5_, G_) 373
PARTNER ORIGIN Box Body/MPV (G_) 374
PARTNER ORIGIN MPV (G_) 375
PARTNER Platform/Chassis 375
PARTNER Platform/Chassis (5_, G_) 375
PARTNER TEPEE 375
RCZ 376
RIFTER 376

© 2022 Continental Aftermarket & Services GmbH

PIAGGIO 376
PORTER Bus 376
PORTER Platform/Chassis 376
PORTER Van 377

POLESTAR 377
POLESTAR 1 (P) 377
POLESTAR 2 (P) 377

PORSCHE 377
718 BOXSTER (982) 377
718 BOXSTER Spyder (982) 377
718 CAYMAN (982) 377
911 (991) 377
911 (992) 377
911 Convertible (991) 378
911 Convertible (992) 378
911 Speedster (991) 378
911 Targa (991) 378
911 Targa (992) 378
918 Spyder 378
928 378
BOXSTER (981) 378
BOXSTER Spyder (981) 378
CAYENNE (92A) 379
CAYENNE (9PA) 378
CAYENNE (9YA) 379
CAYENNE Coupe (9YB) 379
CAYMAN (981) 380
PANAMERA (971) 380
PANAMERA Sport Turismo (971) 380
TAYCAN (Y1A, Y1B) 380
TAYCAN Cross Turismo (Y1B) 380

RENAULT 380
ARKANA I (LCM_) 381
CAPTUR I (J5_, H5_) 381
CAPTUR II 382
CLIO IV (BH_) 382
CLIO IV Grandtour (KH_) 383
CLIO IV Hatchback Van (BH_) 383
CLIO V (B7_) 384
DOKKER 384
DUSTER (HM_) 384
DUSTER (HS_) 385
ESPACE IV (JK0/1_) 385
ESPACE V (JR_) 385
EXPRESS Box Body/MPV 386
FLUENCE (L3_) 386
GRAND SCÉNIC II (JM0/1_) 386
GRAND SCÉNIC III (JZ0/1_) 387
GRAND SCÉNIC IV (R9_) 387
KADJAR (HA_, HL_) 387
KANGOO / GRAND KANGOO II (KW0/1_) 387
KANGOO (KC0/1_) 388
KANGOO BE BOP (KW0/1_) 389
KANGOO Express (FC0/1_) 389
KANGOO Express (FW0/1_) 389
KANGOO III Box Body/MPV 388
KANGOO III MPV 389
KAPTUR (H5_) 390
KOLEOS I (HY_) 390
KOLEOS II (HC_) 391
LAGUNA II (BG0/1_) 391
LAGUNA II Grandtour (KG0/1_) 391
LATITUDE (L70_) 392
LODGY (JS_) 392
LOGAN/STEPWAY II (L8_) 392
LOGAN EXPRESS (US_) 393
LOGAN II Estate (K8_) 393
MEGANE CC (EZ0/1_) 397
MEGANE II (BM0/1_, CM0/1_) 393
MEGANE II Coupé-Cabriolet (EM0/1_) 394
MEGANE II Estate (KM0/1_) 394
MEGANE II Estate Van (KM_) 394
MEGANE II Hatchback Van (KM0/2_) 394
MEGANE III Combi Van (KZ0/1) 395
MEGANE III Coupe (DZ0/1_) 395

RENAULT 380
MEGANE III Grandtour (KZ0/1) 395
MEGANE III Hatchback (BZ0/1_, B3_) 396
MEGANE III Hatchback Van (BZ_) 396
MEGANE II Saloon (LM0/1_) 394
MEGANE IV Grandtour (K9A/M/N_) 396
MEGANE IV Hatchback (B9A/M/N_) 396
SANDERO/STEPWAY II (B8_) 397
SCÉNIC II (JM0/1_) 397
SCÉNIC III (JZ0/1_) 398
SCÉNIC III VAN (JZ0/1_) 398
SCÉNIC IV (J9_) 398
TALISMAN (LP_) 399
TALISMAN Grandtour (KP_) 399
THALIA III (L8_) 399
TWINGO II (CN0_) 399
TWINGO II Hatchback Van (CNO_) 400
TWINGO III (BCM_, BCA_) 400
VEL SATIS (BJ0_) 400
ZOE (BFM_) 400
ZOE Hatchback Van (BFM_) 401

ROVER 401
200 Coupe (XW) 402
200 II Convertible (XW) 402
200 II Hatchback (RF) 402
200 II Hatchback (XW) 402
25 I Hatchback (RF) 401
400 II (RT) 402
400 II (XW) 402
400 II Hatchback (RT) 402
400 Tourer (XW) 402
45 I Hatchback (RT) 401
45 I Saloon (RT) 401
600 I (RH) 403
75 (RJ) 401
75 I Tourer (RJ) 401
COUPE 403

SAAB 403
9000 409
9000 Hatchback 409
900 I (AC4, AM4) 408
900 I Combi Coupe 408
900 I Convertible 409
900 II 409
900 II Convertible 409
900 II Coupe 409
9-3 (YS3D) 403
9-3 (YS3F, E79, D79, D75) 403
9-3 Cabriolet (YS3D) 404
9-3 Convertible (YS3F) 404
9-3 Estate (E50) 406
9-3X (YS3) 407
9-5 (YS3E) 407
9-5 Estate (YS3E) 407

SEAT 410
ALHAMBRA (710, 711) 410
ALHAMBRA (7V8, 7V9) 410
ALHAMBRA VAN (711) 411
ALTEA (5P1) 411
ALTEA XL (5P5, 5P8) 412
ARONA (KJ7) 413
ATECA (KH7, KHP) 413
CORDOBA (6L2) 415
IBIZA III (6L1) 416
IBIZA IV (6J5, 6P1) 416
IBIZA IV Hatchback Van (6J1) 418
IBIZA IV SC (6J1, 6P5) 418
IBIZA IV ST (6J8, 6P8) 420
IBIZA V (KJ1, KJG) 421
LEON (1M1) 422
LEON (1P1) 422
LEON (5F1) 424
LEON (KL1) 429
LEON Hatchback Van (5F1) 430
LEON SC (5F5) 433

SEAT 410
LEON Sportstourer (KL8) 436
LEON ST (5F8) 437
LEON ST Estate Van (5F8) 443
Mii (KF1, KE1) 446
TARRACO (KN2) 446
TOLEDO II (1M2) 448
TOLEDO III (5P2) 448
TOLEDO IV (KG3) 449

SKODA 450
CITIGO (NF1) 450
E-CITIGO (NE1) 450
ENYAQ iV SUV (5AC, 5AZ) 450
FABIA I (6Y2) 450
FABIA I Combi (6Y5) 451
FABIA II (542) 452
FABIA II Combi (545) 453
FABIA III (NJ3) 454
FABIA III Estate (NJ5) 455
FABIA I Praktik (6Y5) 451
FABIA I Saloon (6Y3) 452
FABIA IV (PJ3) 456
KAMIQ (NW4) 456
KAROQ (NU7, ND7) 457
KODIAQ (NS7, NV7, NS6) 458
OCTAVIA I (1U2) 460
OCTAVIA I Combi (1U5) 460
OCTAVIA I Estate Van (1U5) 461
OCTAVIA II (1Z3) 461
OCTAVIA II Combi (1Z5) 462
OCTAVIA III (5E3, NL3, NR3) 464
OCTAVIA III Combi (5E5, 5E6) 468
OCTAVIA IV (NX3, NN3) 472
OCTAVIA IV Combi (NX5) 473
RAPID (NA2) 474
RAPID (NH3, NK3, NK6) 475
RAPID Spaceback (NH1) 476
ROOMSTER (5J7) 477
ROOMSTER Praktik (5J) 479
SCALA (NW1) 479
SUPERB I (3U4) 480
SUPERB II (3T4) 480
SUPERB II Estate (3T5) 482
SUPERB III (3V3) 484
SUPERB III Estate (3V5) 486
YETI (5L) 488

SMART 489
FORFOUR Hatchback (453) 489
FORTWO Convertible (453) 489
FORTWO Coupe (453) 489

SSANGYONG 490
RODIUS I 490
RODIUS II 490
RODIUS II VAN (CA1) 490
TIVOLI 490
XLV SUV 490
XLV VAN 490

SUBARU 490
JUSTY IV 490

SUZUKI 490
BALENO (FW, EW) 490
IGNIS III (MF) 490
KIZASHI (FR) 491
SWIFT III (MZ, EZ) 491
SWIFT IV (FZ, NZ) 491
SWIFT V (AZ) 491
SX4 (EY, GY) 491
SX4 Saloon (GY, RW) 491

© 2022 Continental Aftermarket & Services GmbH

TALBOT 491

1307-1510 491
SOLARA 492

TOYOTA 492

AVENSIS (_T22_) 492
AVENSIS Estate (_T22_) 492
AVENSIS Liftback (_T22_) 492
AYGO (_B4_) 492
PROACE CITY Box Body/MPV 492
PROACE CITY VERSO MPV 493
SUPRA (DB_) 493
VERSO (_R2_) 493
VERSO VAN (_R2_) 493
YARIS / VIOS Saloon (_P9_) 493
YARIS (_P1_) 493
YARIS (_P13_) 494
YARIS (_P9_) 493
YARIS Hatchback Van (_P13_) 494

VAUXHALL 494

ADAM (M13) 494
ASTRA Mk II Belmont (T85) 494
ASTRA Mk II Convertible (T85) 494
ASTRA Mk II Estate (T85) 494
ASTRA Mk II Hatchback (T85) 494
ASTRA Mk III (F) Convertible (T92) 494
ASTRA Mk III (F) Estate (T92) 494
ASTRA Mk III (F) Hatchback (T92) 495
ASTRA Mk III (F) Saloon (T92) 495
ASTRA Mk IV (G) Convertible (T98) 496
ASTRA Mk IV (G) Coupe (T98) 496
ASTRA Mk IV (G) Estate (T98) 496
ASTRA Mk IV (G) Hatchback (T98) 496
ASTRA Mk IV (G) Saloon (T98) 496
ASTRA Mk V (H) (A04) 497
ASTRA Mk V (H) Estate (A04) 497
ASTRA Mk V (H) Sport Hatch (A04) 497
ASTRA Mk V (H) TwinTop (A04) 498
ASTRA Mk VII (K) (B16) 498
ASTRA Mk VII (K) Estate (B16) 498
ASTRAVAN Mk III (F) Estate Van (T92) 498
ASTRAVAN Mk IV (G) Estate Van (T98) 499
ASTRAVAN Mk V (H) Estate Van (A04) 499
CALIBRA (C89) 499
CARLTON Mk III Estate (V87) 499
CARLTON Mk III Saloon (V87) 499
CAVALIER Mk III Hatchback (J89) 499
CAVALIER Mk III Saloon (J89) 500
COMBO Mk I (B) (S93) 500
COMBO Mk II (C) Box Body/MPV (F25) 500
COMBO Mk III (D) Box Body/MPV (X12) 501
COMBO Mk IV (E) Box Body/MPV (K9) 501
COMBO Mk IV (E) Life (K9) 501
COMBO TOUR Mk II (C) (F25) 501
CORSA Mk I (B) (S93) 501
CORSA Mk II (C) (X01) 502
CORSA Mk III (D) (S07) 502
CORSA Mk IV (E) (X15) 502
CORSA Mk V (F) 503
CORSAVAN Mk I (B) Hatchback Van (S93) 503
CORSAVAN Mk II (C) Hatchback Van (X01) 503
CORSAVAN Mk III (D) Hatchback Van (S07) 503
CORSAVAN Mk IV (E) Hatchback Van (X15) 503
CROSSLAND X (P17) 504
FRONTERA Mk I (A) (U92) 504
FRONTERA Mk I (A) Sport (U92) 504
FRONTERA Mk II (B) (U99) 504
GRANDLAND X (A18) 504
INSIGNIA Mk II (B) Country Tourer (Z18) 505
INSIGNIA Mk II (B) Hatchback (Z18) 505
INSIGNIA Mk II (B) Sports Tourer (Z18) 505
MERIVA A (X03) 505
MERIVA Mk II (B) (S10) 505
MOKKA 505
MONTEREY (M92) 506
MONTEREY Mk II (M98) 506
NOVA Hatchback (S83) 506
NOVA Saloon (S83) 506

VAUXHALL 494

NOVAVAN Hatchback Van (S83) 506
OMEGA (B) Estate (V94) 506
OMEGA (B) Saloon (V94) 506
ROYALE 506
ROYALE Coupe 506
SENATOR 507
SENATOR Mk II (B) (V88) 507
SIGNUM (Z03) 507
TIGRA Mk I (S93) 507
VECTRA (B) Estate (J96) 507
VECTRA (B) Hatchback (J96) 508
VECTRA (B) Saloon (J96) 508
VECTRA Mk II (C) (Z02) 508
VECTRA Mk II (C) Estate (Z02) 509
VECTRA Mk II (C) GTS (Z02) 510
VIVA (C16) 510
ZAFIRA A (T98) 511
ZAFIRA Mk II (B) (A05) 511
ZAFIRA Mk III (P12) 511

VOLVO 511

440 (445) 511
460 (464) 511
480 (482) 512
850 (854) 512
850 Estate (855) 512
C30 (533) 512
C70 I Coupe (872) 513
C70 II Convertible (542) 513
S40 II (544) 513
S60 I (384) 514
S60 II (134) 515
S60 III (224) 515
S70 (874) 516
S80 I (184) 516
S80 II (124) 516
S90 II (234) 517
V40 Hatchback (525, 526) 517
V40 Hatchback Van (525, 526) 518
V50 (545) 518
V60 I (155, 157) 519
V60 I Estate Van (155) 520
V60 II (225, 227) 520
V70 I (875, 876) 520
V70 II (285) 520
V70 III (135) 521
V70 III Estate Van (135) 522
V90 II Estate (235, 236) 522
XC40 (536) 522
XC60 II (246) 522
XC70 CROSS COUNTRY I (295) 523
XC70 II (136) 523
XC70 II VAN (136) 523
XC90 I (275) 523
XC90 II (256) 524
XC90 I VAN (275) 524

VW 524

AMAROK (2HA, 2HB, S1B, S6B, S7A, S7B) 524
AMAROK Platform/Chassis (S1B, S6B, S7B) 524
ARTEON (3H7, 3H8) 525
ARTEON SHOOTING BRAKE (3H9) 526
BEETLE (5C1, 5C2) 527
BEETLE Convertible (5C7, 5C8) 529
BORA (9M2) 531
BORA I (1J2) 531
BORA Variant (1J6) 532
CADDY ALLTRACK Box Body/MPV (SAA) 540
CADDY ALLTRACK MPV (SAB) 541
CADDY Box Body/MPV (6K9, 9E7, 9E9) 542
CADDY III Box Body/MPV (2KA, 2KH, 2CA, 2CH) 533
CADDY III MPV (2KB, 2KJ, 2CB, 2CJ) 535
CADDY IV Box Body/MPV (SAA, SAH) 536
CADDY IV MPV (SAB, SAJ) 538
CADDY V Box Body/MPV (SBA, SBH) 539
CADDY V MPV (SBB, SBJ) 539

VW 524

CALIFORNIA T6 Camper (SGC, SGG, SHC) 543
CC B7 (358) 543
CRAFTER 30-35 Bus (2E_) 544
CRAFTER 30-50 Platform/Chassis (2F_) 544
CRAFTER 30-50 Van (2E_) 544
CRAFTER Bus (SYI, SYJ) 544
CRAFTER Platform/Chassis (SZ_) 545
CRAFTER Van (SY_, SX_) 545
EOS (1F7, 1F8) 545
FOX Hatchback (5Z1, 5Z3, 5Z4) 546
FOX Van (5Z1) 547
GOLF ALLTRACK VIII (CG5) 574
GOLF ALLTRACK VII Variant (BA5, BV5) 573
GOLF Hatchback Van (1K1) 575
GOLF III (1H1) 547
GOLF III Variant (1H5) 547
GOLF IV (1J1) 547
GOLF IV (9B3) 548
GOLF IV Van (1J1) 548
GOLF IV Variant (1J5) 548
GOLF PLUS V (5M1, 521) 575
GOLF PLUS Van (521) 576
GOLF SPORTSVAN VII (AM1, AN1) 576
GOLF V (1K1) 549
GOLF VAN IV Variant (1J5) 578
GOLF VAN VII Variant (BA5) 579
GOLF VAN VI Variant (AJ5) 579
GOLF VI (5K1) 551
GOLF VI Convertible (517) 552
GOLF VII (5G1, BQ1, BE1, BE2) 555
GOLF VIII (CD1) 570
GOLF VIII Variant (CG5) 571
GOLF VII Van (5G1) 562
GOLF VII Variant (BA5, BV5) 564
GOLF VI Van (5K1_) 553
GOLF VI Variant (AJ5) 554
GOLF V Variant (1K5) 550
GRAND CALIFORNIA Camper (SCB, SCC) 581
ID.3 (E11) 581
ID.4 (E21) 581
JETTA III (1K2) 581
JETTA IV (162, 163, AV3, AV2) 582
JETTA VII Saloon (BU3) 584
LOAD UP (121, 122, BL1, BL2) 584
LT 28-35 II Bus (2DB, 2DE, 2DK) 585
LT 28-46 II Platform/Chassis (2DC, 2DF, 2DG, 2DL, 2DM) 585
LT 28-46 II Van (2DA, 2DD, 2DH) 585
LUPO I (6X1, 6E1) 585
MULTIVAN T7 (STM, STN) 586
MULTIVAN V (7HM, 7HN, 7HF, 7EF, 7EM, 7EN) 585
MULTIVAN VI (SGF, SGM, SGN, SHM, SHN) 586
NEW BEETLE (9C1, 1C1) 586
NEW BEETLE Convertible (1Y7) 586
PASSAT ALLTRACK B7 (365) 587
PASSAT ALLTRACK B8 Variant (3G5, CB5) 588
PASSAT B3/B4 (3A2, 35I) 589
PASSAT B3/B4 Variant (3A5, 35I) 589
PASSAT B5.5 (3B3) 589
PASSAT B5.5 Variant (3B6) 590
PASSAT B5 (3B2) 590
PASSAT B5 Variant (3B5) 590
PASSAT B6 (3C2) 591
PASSAT B6 Variant (3C5) 592
PASSAT B7 (362) 594
PASSAT B7 (A32, A33) 595
PASSAT B7 Estate Van (365) 595
PASSAT B7 Variant (365) 596
PASSAT B8 (3G2, CB2) 598
PASSAT B8 Variant (3G5, CB5) 600
PASSAT CC B6 (357) 603
POLO (9N_, 9A_) 604
POLO IV Saloon (9A4, 9A2, 9N2, 9A6) 606
POLO IV Saloon (9N4) 607
POLO V (6R1, 6C1) 607
POLO Van (6R) 610
POLO Van Estate Van (6V5) 611
POLO VI (AW1, BZ1, AE1) 609
POLO VIVO Hatchback (6S1, 6S3) 612

© 2022 Continental Aftermarket & Services GmbH

VW 524

POLO V Saloon (602, 604, 612, 614)	609
SCIROCCO III (137, 138)	612
SCIROCCO Van (137)	614
SHARAN (7M8, 7M9, 7M6)	615
SHARAN (7N1, 7N2)	615
SHARAN VAN (7M_)	616
SHARAN VAN (7N1, 7N2)	616
TAIGO (CS1)	616
TAOS (CL1, CQ1)	617
T-CROSS (C11)	617
TIGUAN (5N_)	617
TIGUAN (AD1, AX1)	618
TIGUAN ALLSPACE (BW2, BJ2)	621
TIGUAN SUV Van (AD1)	622
TIGUAN VAN (5N_)	623
TOUAREG (7LA, 7L6, 7L7)	624
TOUAREG (7P5, 7P6)	625
TOUAREG VAN (7P5)	625
TOURAN (1T1, 1T2)	625
TOURAN (1T3)	627
TOURAN (5T1)	627
TOURAN VAN (1T1, 1T2)	629
TOURAN VAN (1T3)	629
TOURAN VAN (5T1)	630
TRANSPORTER III Bus	630
TRANSPORTER III Platform/Chassis	631
TRANSPORTER III Van	631
TRANSPORTER IV Bus (70B, 70C, 7DB, 7DK, 70J, 70K, 7DC, 7DJ)	631
TRANSPORTER IV Platform/Chassis (70E, 70L, 70M, 7DE, 7DL, 7D	631
TRANSPORTER IV Van (70A, 70H, 7DA, 7DH)	632
TRANSPORTER V Bus (7HB, 7HJ, 7EB, 7EJ)	632
TRANSPORTER V Platform/Chassis (7JD, 7JE, 7JL, 7JY, 7JZ, 7FD	632
TRANSPORTER V Van (7HA, 7HH, 7EA, 7EH)	633
T-ROC (A11)	633
T-ROC Convertible (AC7)	634
UP! (121, 122, BL1, BL2, BL3, 123)	635
VENTO (1H2)	635

© 2022 Continental Aftermarket & Services GmbH

EN Product details

DE Produktdetails

ES Descripción del producto

FR Présentation du produit

IT Panoramica prodotti

12/2021

© 2022 Continental Aftermarket & Services GmbH

03.0137-0273.2 650273

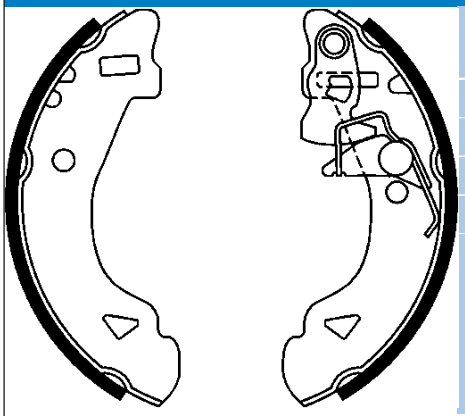

Brake Shoe Set

+ AUT

AP

Ø 185

Width [mm] 31

AUTOBIANCHI, FIAT, LANCIA, NISSAN

03.0137-0339.2 650339

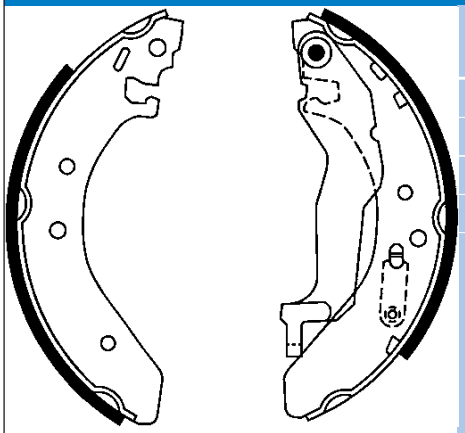

Brake Shoe Set

Ø 203

Observe dimensions

Part number of recommended accessories: 03.0137-9221.2

Width [mm] 38

HONDA, ROVER

03.0137-0417.2 650417

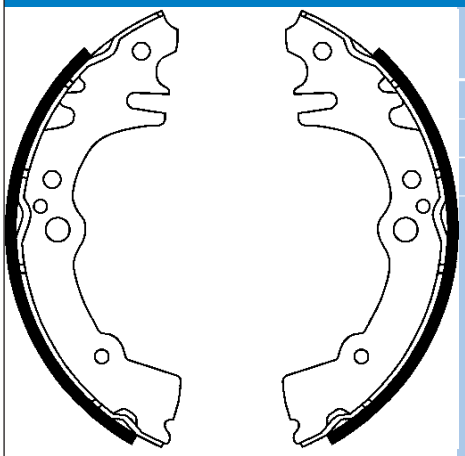

Brake Shoe Set

Ø 165

- HEB

Width [mm] 28

DAIHATSU

03.0137-0432.2 650432

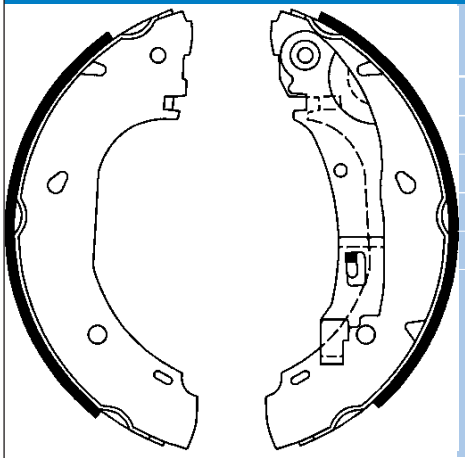

Brake Shoe Set

AP

Ø 254

+ HEB

Part number of recommended accessories: 03.0137-9285.2

Width [mm] 57

CITROËN, FIAT, PEUGEOT, PIAGGIO

© 2022 Continental Aftermarket & Services GmbH

03.0137-0442.2 650442

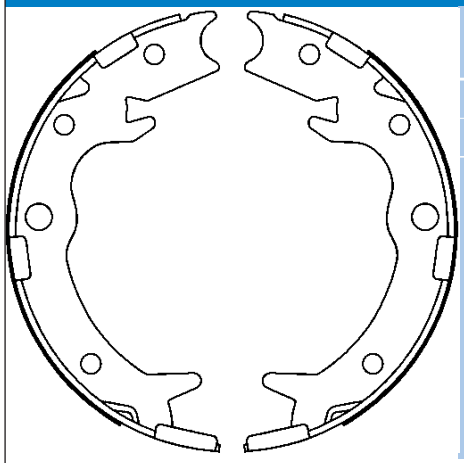

Brake Shoe Set, parking brake

Ø 167

Width [mm] 35

HONDA

03.0137-0496.2 650496

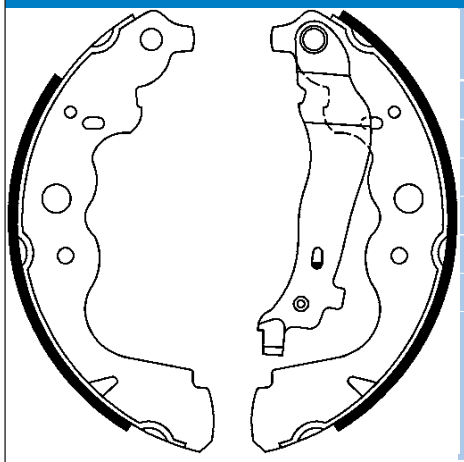

Brake Shoe Set

BDX

Ø 228

+ HEB

Observe dimensions

Part number of recommended accessories: 03.0137-9228.2

Width [mm] 42

DACIA, MERCEDES-BENZ, RENAULT

03.0137-0539.2 650539

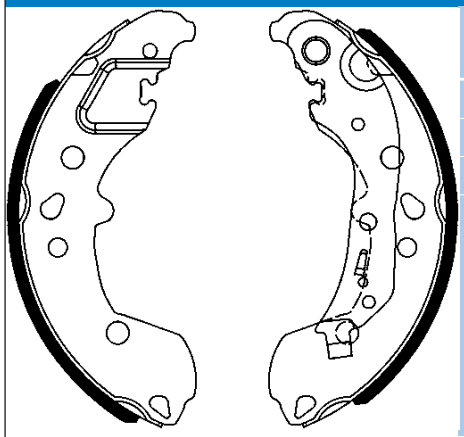

Brake Shoe Set

+ HEB

Ø 203

Width [mm] 38

SEAT, SKODA, VW

03.0137-0540.2 650540

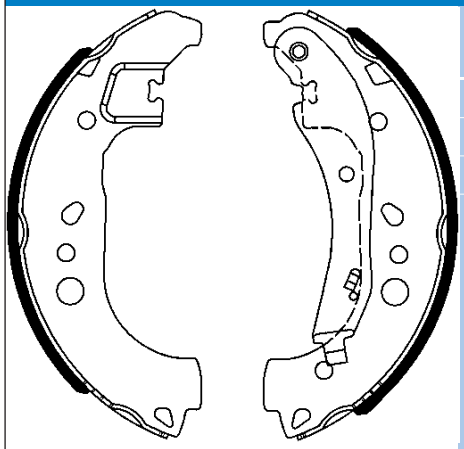

Brake Shoe Set

+ HEB

Ø 228

Width [mm] 42

AUDI, SEAT, SKODA, VW

© 2022 Continental Aftermarket & Services GmbH

03.0137-3051.2 653051

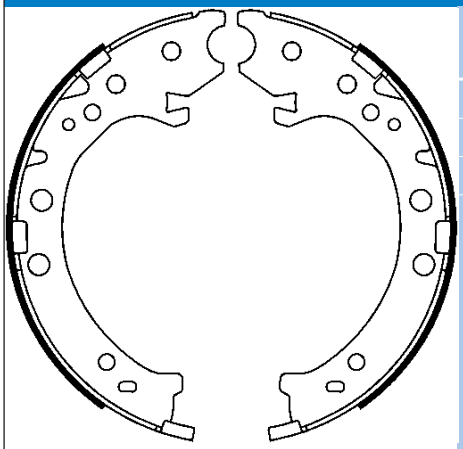

Brake Shoe Set, parking brake

- HEB

Ø 198

Width [mm] 35

HONDA

03.0137-9228.2 669228

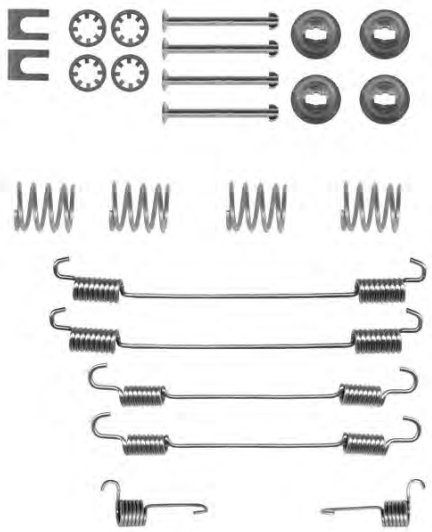

Accessory Kit, brake shoes

BDX

CITROËN, DACIA, DS, MERCEDES-BENZ, NISSAN, PEUGEOT, RENAULT

03.0137-9309.2 669309

Accessory Kit, brake shoes

AP

AUDI, CITROËN, FIAT, LANCIA, OPEL, PEUGEOT, RENAULT, SEAT, SKODA, SMART, VAUXHALL, VW

© 2022 Continental Aftermarket & Services GmbH

03.0137-9317.2 669317

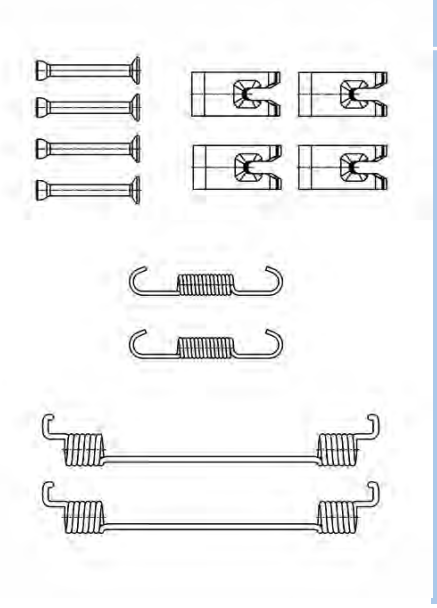

Accessory Kit, brake shoes

FORD, RENAULT, SEAT, SKODA, SMART, VW

03.0137-9349.2 669349

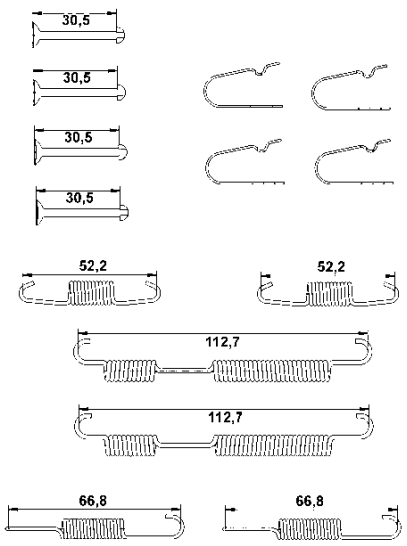

Accessory Kit, parking brake shoes

KIA

03.0137-9353.2 669353

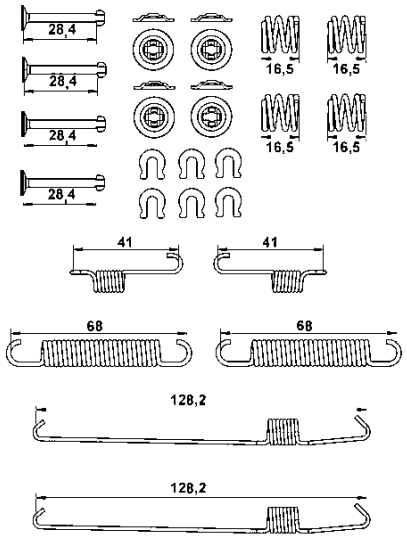

Accessory Kit, brake shoes

DAIHATSU, SUBARU

© 2022 Continental Aftermarket & Services GmbH

03.0137-9354.2 669354

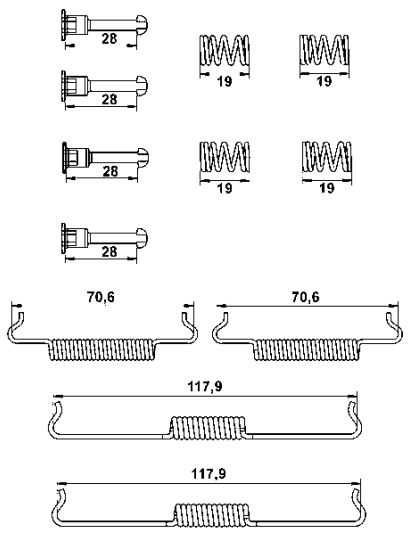

Accessory Kit, parking brake shoes

PORSCHE, VW

03.0137-9700.2 669700

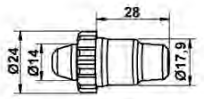

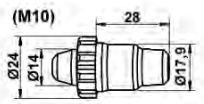

Accessory Kit, parking brake shoes

for article number: 03.0137-0150.2 / 03.0137-0305.2 / 03.0137-0379.2 / 03.0137-0419.2 / 03.0137-0451.2 / 03.0137-3054.2 / 03.0137-4010.2 / 03.0137-4018.2

Ø2 17.9

Ø1 24

AUDI, BMW, CITROËN, FIAT, JAGUAR, LANCIA, MERCEDES-BENZ, PEUGEOT, PORSCHE, VW

03.0520-7222.3 697222

Brake Shoe Set

Ø 228

+ RZ / + Zub

Pre-assembled

Width [mm] 42

Piston Diameter [mm]: 22.2

DACIA, MERCEDES-BENZ, RENAULT

© 2022 Continental Aftermarket & Services GmbH

03.9311-0079.1 730086

Power Cable, filling/bleeding unit (brake hydraulics)

Plug Type ID: SEV JPN

11.8116-0356.1 390586

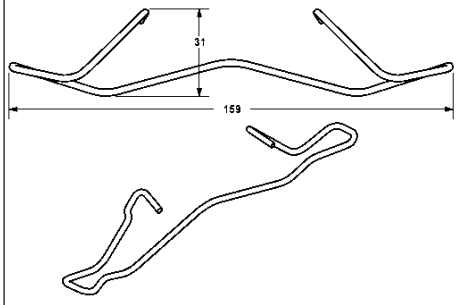

Spring, brake caliper

ATE

CITROËN, DACIA, DS, FIAT, FORD, HONDA, MAZDA, OPEL, PEUGEOT, RENAULT, SAAB, VAUXHALL, VOLVO

11.8171-0008.1 990049

Guide Bolt, brake caliper

Ø 12

ATE

L= 54.9

ALFA ROMEO, AUDI, BMW, CHEVROLET, CHRYSLER, CITROËN, DACIA, DAEWOO, DS, FERRARI, FIAT, FORD, HONDA, JAGUAR, JEEP, KIA, LANCIA, LAND ROVER, MASERATI, MAZDA, MERCEDES-BENZ, MINI, NISSAN, OPEL, PEUGEOT, POLESTAR, PORSCHE, RENAULT, ROVER, SAAB, SEAT, SKODA, TALBOT, TOYOTA, VAUXHALL, VOLVO, VW

11.9282-1001.3 250159

Control Element, parking brake caliper

+ S

Electric

ATE

with seal

AUDI, CUPRA, SEAT, SKODA, VW

11.9282-1002.3 250160

Control Element, parking brake caliper

+ S

Electric

ATE

with seal

AUDI, CUPRA, SEAT, SKODA, VW

© 2022 Continental Aftermarket & Services GmbH

13.0460-2617.2 602617

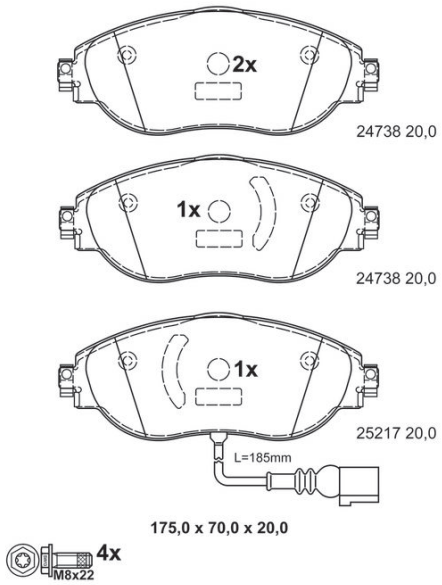

Brake Pad Set, disc brake

Thickness [mm] 20
with brake caliper screws
L= 185
TRW
+ WK
Height [mm] 70
Width [mm] 175
1x

AUDI, CUPRA, SEAT, SKODA, VW

13.0460-2785.2 602785

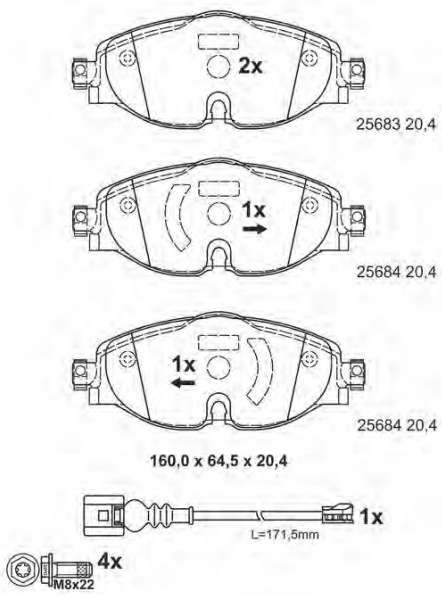

Brake Pad Set, disc brake

Thickness [mm] 20.4
with brake caliper screws
L= 171.5
TRW
Observe dimensions
+ WE / + WK
Height [mm] 64.5
Part number of recommended accessories: 24.8190-0065.2
Width [mm] 160
1x

AUDI, CUPRA, SEAT, SKODA, VW

13.0460-3870.2 603870

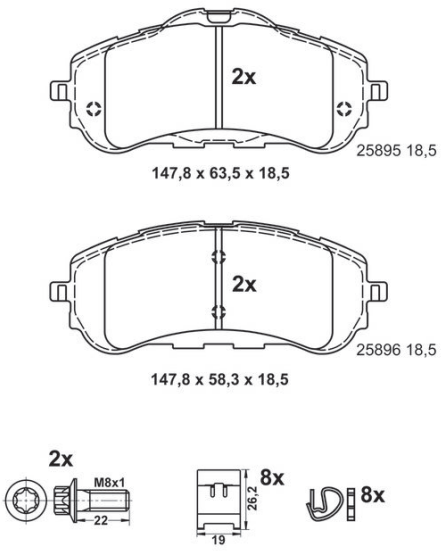

Brake Pad Set, disc brake

Thickness [mm] 18.5
with brake caliper screws
Height 1 [mm]: 58.3
BOS
+ Zub
- WE / - WK
Width [mm] 147.8
Height 2 [mm]: 63.5

CITROËN, OPEL, PEUGEOT, VAUXHALL

© 2022 Continental Aftermarket & Services GmbH

13.0460-3871.2 603871

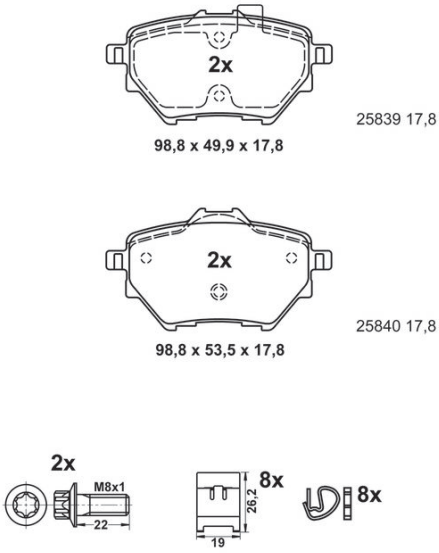

Brake Pad Set, disc brake

Thickness [mm] 17.8

with brake caliper screws

Height 1 [mm]: 49.9

BOS

+ Zub

- WE / - WK

Width [mm] 98.8

Height 2 [mm]: 53.5

CITROËN, DS, OPEL, PEUGEOT, TOYOTA, VAUXHALL

13.0460-3880.2 603880

Brake Pad Set, disc brake

Thickness [mm] 19.1

with brake caliper screws

+ Zub

+ WE / - WK

Part number of recommended accessories: 24.8190-0831.2 / 24.8190-0994.2

Height [mm] 65.1

Width [mm] 141.2

VW

13.0460-3887.2 603887

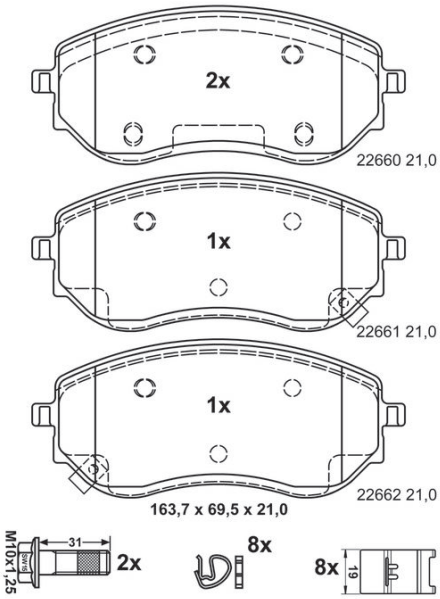

Brake Pad Set, disc brake

Thickness [mm] 21

with brake caliper screws

+ Zub

+ WK

Height [mm] 69.5

Width [mm] 163.7

MERCEDES-BENZ, NISSAN

13.0460-3994.2 603994

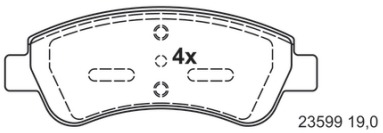

136,8 x 52,0 x 19,0

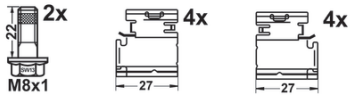

Brake Pad Set, disc brake

Thickness [mm] 19

with brake caliper screws

BOS

+ Zub

- WE / - WK

Height [mm] 52

Width [mm] 136.8

CITROËN, DS, OPEL, PEUGEOT, VAUXHALL

13.0460-4708.2 604708

Brake Pad Set, disc brake

Thickness [mm] 20.5

BRE

+ WE / - WK

Height [mm] 66.7

Part number of recommended accessories: 24.8190-0992.2

Width [mm] 169.1

MERCEDES-BENZ

13.0460-4896.2 604896

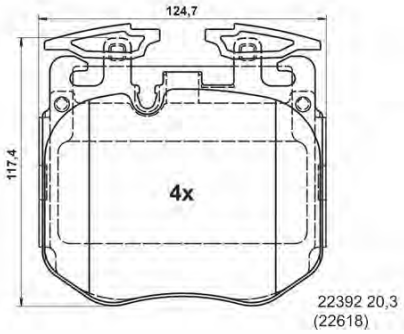

124,7 x 117,4 x 20,3

Brake Pad Set, disc brake

Thickness [mm] 20.3

BRE

+ WE / - WK

Height [mm] 117.4

Part number of recommended accessories: 24.8190-0824.2

Width [mm] 124.7

BMW

© 2022 Continental Aftermarket & Services GmbH

13.0460-4897.2 604897

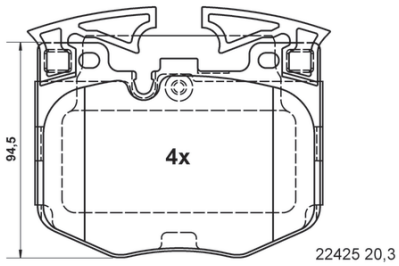

125,9 x 94,5 x 20,3

Brake Pad Set, disc brake

Thickness [mm] 20.3

BRE

+ WE / - WK

Height [mm] 94.5

Part number of recommended accessories: 24.8190-0808.2 / 24.8190-0996.2

Width [mm] 125.9

BMW, TOYOTA

13.0460-5512.2 605512

Brake Pad Set, disc brake

Thickness [mm] 19.2

TRW

+ Zub

+ WK

Height [mm] 64.3

Width [mm] 142

OPEL, VAUXHALL

13.0460-5514.2 605514

Brake Pad Set, disc brake

Thickness [mm] 16.7

with anti-squeak plate

Height 1 [mm]: 47.5

TRW

+ Zub

+ WK

Width [mm] 115.6

JEEP

13.0460-5518.2 605518

Brake Pad Set, disc brake

Thickness [mm] 17.4

with anti-squeak plate

+ WK

Height [mm] 53.6

Width [mm] 142

CHEVROLET

© 2022 Continental Aftermarket & Services GmbH

13.0460-5523.2 605523

Brake Pad Set, disc brake

Thickness [mm] 17

with brake caliper screws

Height 1 [mm]: 73.2

+ Zub

+ WE / - WK

Width [mm] 110.6

Height 2 [mm]: 65.9

BMW, TOYOTA

13.0460-5526.2 605526

Brake Pad Set, disc brake

Thickness [mm] 17.4

+ Zub

+ WK

Height [mm] 60.9

Width [mm] 137.8

HYUNDAI, KIA

13.0460-5530.2 605530

Brake Pad Set, disc brake

Thickness [mm] 15.9

with anti-squeak plate

+ Zub

+ WK

Height [mm] 49

Width [mm] 119

HONDA

13.0460-5631.2 605631

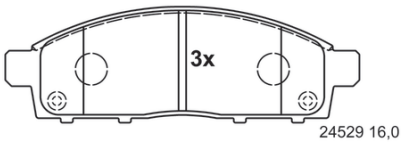

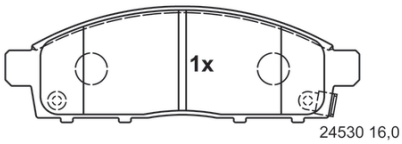

155,4 x 50,9 x 16,0

Brake Pad Set, disc brake

Thickness [mm] 16

+ WK

Height [mm] 50.9

Width [mm] 155.4

FIAT, MITSUBISHI

© 2022 Continental Aftermarket & Services GmbH

13.0460-5650.2 605650

25337 15,5

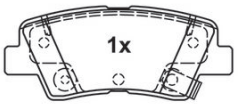

25338 15,5

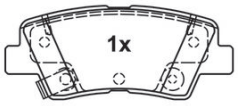

25339 15,5

99,8 x 41,1 x 15,5

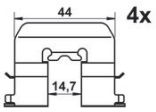

Brake Pad Set, disc brake

Thickness [mm] 15.5

AKE

+ Zub

+ WK

Height [mm] 41.1

Width [mm] 99.8

HYUNDAI, KIA, SSANGYONG

13.0460-5686.2 605686

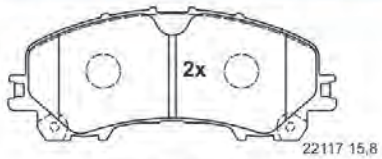

22117 15,8

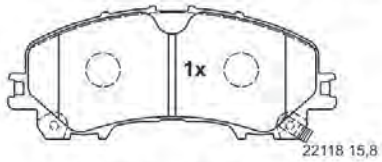

22118 15,8

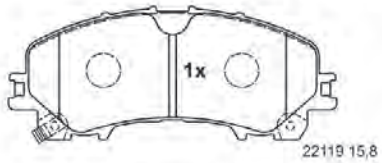

22119 15,8

151,8 x 61,5 x 15,8

Brake Pad Set, disc brake

Thickness [mm] 15.8

AKE

+ WK

Height [mm] 61.5

Part number of recommended accessories: 13.0460-0530.2

Width [mm] 151.8

INFINITI, NISSAN, RENAULT

13.0460-5688.2 605688

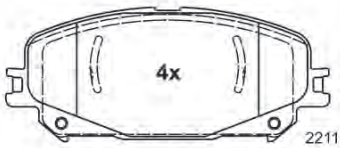

22119 18,6

142,0 x 58,9 x 18,6

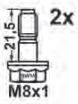

Brake Pad Set, disc brake

Thickness [mm] 18.6

with brake caliper screws

AKE

- WE / - WK

Height [mm] 58.9

Width [mm] 142

RENAULT

© 2022 Continental Aftermarket & Services GmbH

13.0460-5711.2 605711

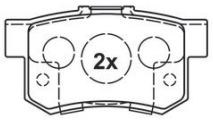

23736 15,7

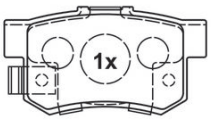

23652 15,7

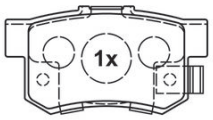

23653 15,7

88,8 x 47,5 x 15,7

Brake Pad Set, disc brake

Thickness [mm] 15.7

Observe dimensions

+ WK

Height [mm] 47.5

Part number of recommended accessories: 13.0460-0287.2

Width [mm] 88.8

HONDA

13.0460-5716.2 605716

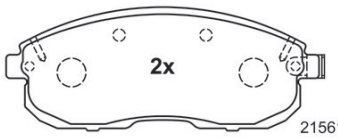

21561 17,0

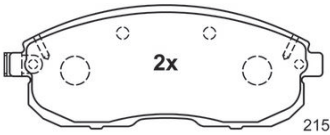

21562 17,0

137,3 x 54,4 x 17,0

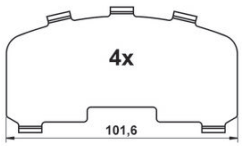

Brake Pad Set, disc brake

Thickness [mm] 17

with anti-squeak plate

Observe dimensions

+ WK

Height [mm] 54.4

Part number of recommended accessories: 13.0460-0170.2 / 13.0460-0201.2

Width [mm] 137.3

INFINITI, NISSAN, RENAULT, SUZUKI

13.0460-5778.2 605778

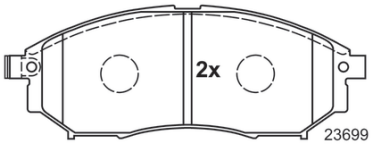

23699 16,8

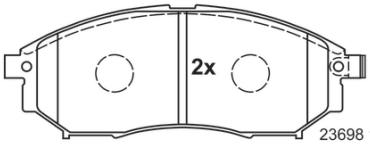

23698 16,8

157,0 x 58,5 x 16,8

Brake Pad Set, disc brake

Thickness [mm] 16.8

SUM

Observe dimensions

+ WK

Height [mm] 58.5

Part number of recommended accessories: 13.0460-0017.2

Width [mm] 157

INFINITI, NISSAN, RENAULT

© 2022 Continental Aftermarket & Services GmbH

13.0460-5798.2 605798

Brake Pad Set, disc brake

Thickness [mm] 15.8

with anti-squeak plate

MAN

+ WK

Height [mm] 48

Width [mm] 118.6

SSANGYONG

13.0460-5818.2 605818

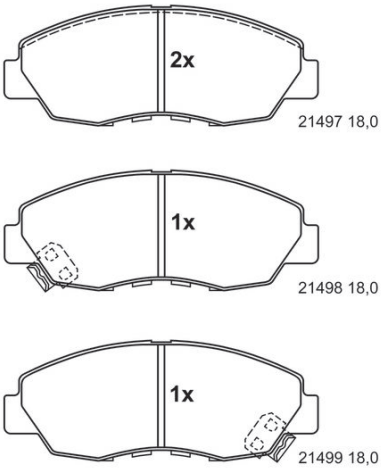

137,8 x 52,7 x 18,0

Brake Pad Set, disc brake

Thickness [mm] 18

AKE

+ WK

Height [mm] 52.7

Width [mm] 137.8

HONDA

13.0460-5842.2 605842

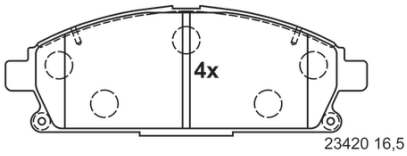

158,8 x 56,3 x 16,5

Brake Pad Set, disc brake

Thickness [mm] 16.5

Observe dimensions

- WE / - WK

Height [mm] 56.3

Part number of recommended accessories: 13.0460-0340.2

Width [mm] 158.8

HONDA, NISSAN

© 2022 Continental Aftermarket & Services GmbH

13.0460-5852.2 605852

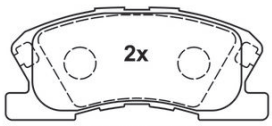

23497 15,0

115,4 x 49,6 x 15,0

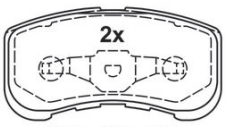

23498 14,8

95,0 x 49,6 x 14,8

Brake Pad Set, disc brake

Height 1 [mm]: 49.6

B2= 115.4

B1= 95

Thickness 2 [mm] 15

+ Zub

Thickness 1 [mm] 14.8

+ WK

Height 2 [mm]: 49.6

DAIHATSU

13.0460-5853.2 605853

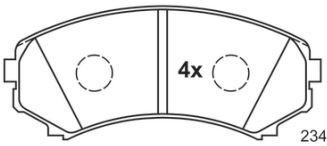

23488 15,4

139,0 x 58,6 x 15,4

Brake Pad Set, disc brake

Thickness [mm] 15.4

SUM

Observe dimensions

+ WK

Height [mm] 58.6

Part number of recommended accessories: 13.0460-0222.2

Width [mm] 139

ISUZU, MAZDA, MITSUBISHI

13.0460-5878.2 605878

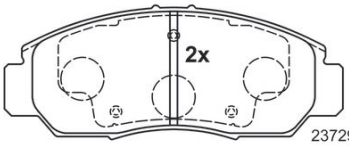

23729 16,2

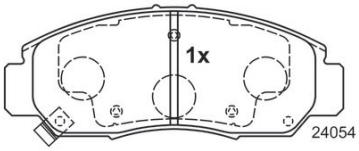

24054 16,2

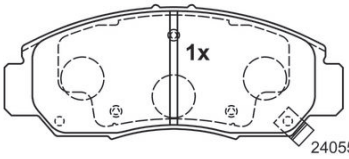

24055 16,2

148,7 x 59,0 x 16,2

Brake Pad Set, disc brake

Thickness [mm] 16.9

+ WK

Height [mm] 59

Width [mm] 148.7

HONDA

© 2022 Continental Aftermarket & Services GmbH

13.0460-5880.2 605880

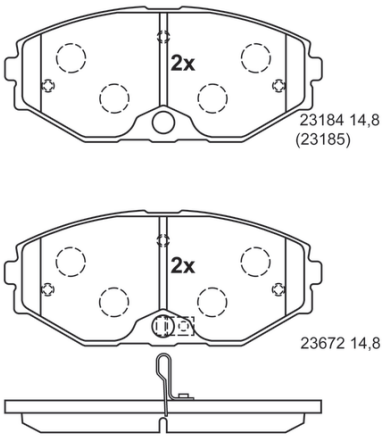

139,1 x 59,5 x 14,8

Brake Pad Set, disc brake

Thickness [mm] 14.8

Observe dimensions

+ WK

Height [mm] 59.5

Part number of recommended accessories: 13.0460-0112.2

Width [mm] 139.1

NISSAN

13.0460-5927.2 605927

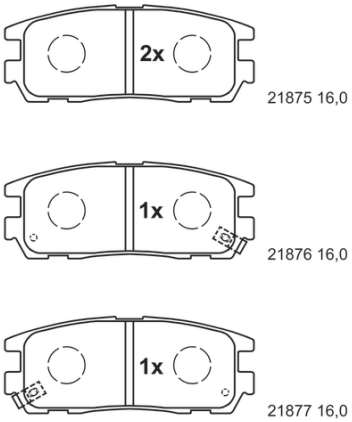

109,6 x 42,8 x 16,0

Brake Pad Set, disc brake

Thickness [mm] 16

AKE

Observe dimensions

+ WK

Height [mm] 42.8

Part number of recommended accessories: 13.0460-0447.2

Width [mm] 109.6

ISUZU, OPEL, VAUXHALL

13.0460-5929.2 605929

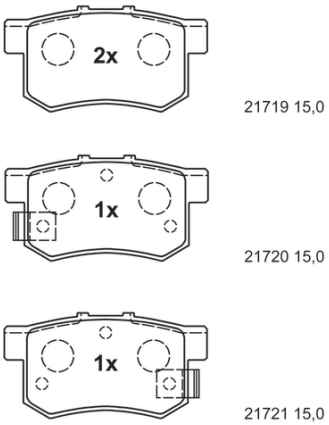

88,9 x 47,1 x 15,0

Brake Pad Set, disc brake

Thickness [mm] 15

AKE

Observe dimensions

+ WK

Height [mm] 47.1

Part number of recommended accessories: 13.0460-0287.2

Width [mm] 88.9

FIAT, HONDA, MG, ROVER, SUZUKI

© 2022 Continental Aftermarket & Services GmbH

13.0460-5933.2 605933

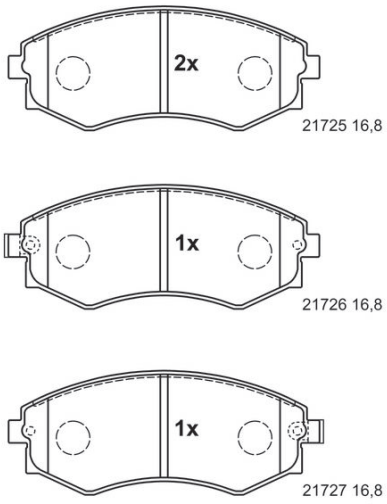

137,0 x 54,5 x 16,8

Brake Pad Set, disc brake

Thickness [mm] 16.8

AKE

+ WK

Height [mm] 54.5

Width [mm] 137

DAEWOO, HYUNDAI, KIA, NISSAN

13.0460-5937.2 605937

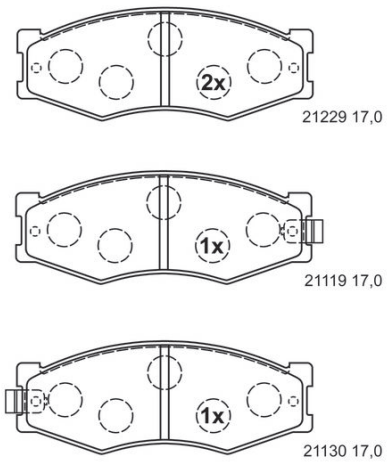

130,2 x 49,7 x 17,0

Brake Pad Set, disc brake

Thickness [mm] 17

AKE

Observe dimensions

+ WK

Height [mm] 49.7

Part number of recommended accessories: 13.0460-0322.2

Width [mm] 130.2

NISSAN

13.0460-5983.2 605983

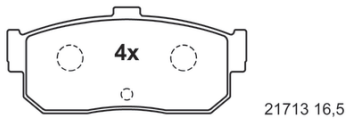

105,3 x 47,0 x 16,5

Brake Pad Set, disc brake

Thickness [mm] 16.5

Observe dimensions

- WE / - WK

Height [mm] 47

Part number of recommended accessories: 13.0460-0295.2 / 13.0460-0332.2

Width [mm] 105.3

NISSAN

© 2022 Continental Aftermarket & Services GmbH

13.0460-7193.2 607193

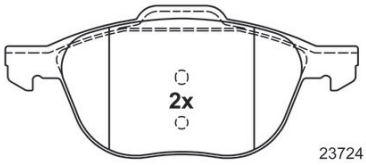

23724 18,1

156,3 x 67,0 x 18,1

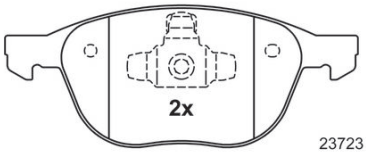

23723 18,1

155,1 x 62,4 x 18,1

Brake Pad Set, disc brake

Thickness [mm] 18.1

Height 1 [mm]: 62.4

ATE

B2= 156.3

B1= 155.1

- WE / - WK

Height 2 [mm]: 67

FORD, MAZDA, VOLVO

13.0460-7266.2 607266

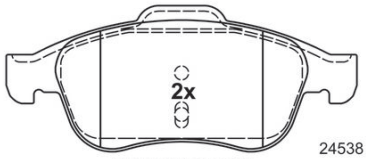

24538 17,9

155,1 x 64,7 x 17,9

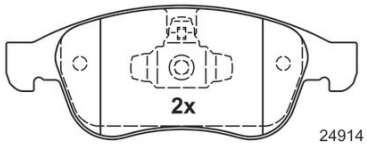

24914 17,9

155,1 x 59,4 x 17,9

Brake Pad Set, disc brake

Thickness [mm] 17.9

Height 1 [mm]: 64.7

ATE

B2= 155.1

B1= 155.1

- WE / - WK

Height 2 [mm]: 59.4

DACIA, NISSAN, RENAULT

13.0460-7293.2 607293

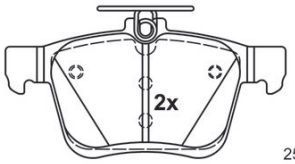

25008 16,3

123,0 x 61,2 x 16,3

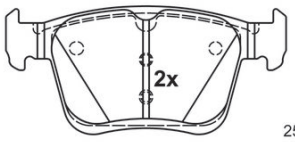

25010 16,3

123,0 x 56,2 x 16,3

Brake Pad Set, disc brake

Thickness [mm] 16.3

Height 1 [mm]: 61.2

ATE

B2= 123

B1= 123

- WE / - WK

Height 2 [mm]: 56.2

AUDI, SEAT, SKODA, VW

© 2022 Continental Aftermarket & Services GmbH

13.0460-7294.2 607294

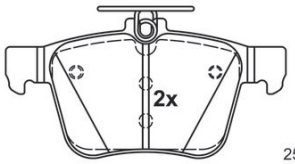

25009 16,4

123,0 x 61,2 x 16,4

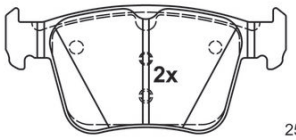

25011 16,4

123,0 x 56,2 x 16,4

Brake Pad Set, disc brake

Thickness [mm] 16.4

Height 1 [mm]: 61.2

ATE

B2= 123

B1= 123

- WE / - WK

Height 2 [mm]: 56.2

AUDI, CUPRA, SEAT, SKODA, VW

13.0460-7339.2 607339

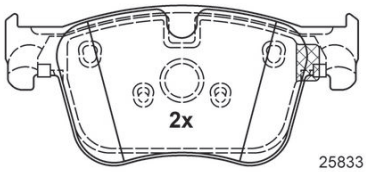

25833 17,7

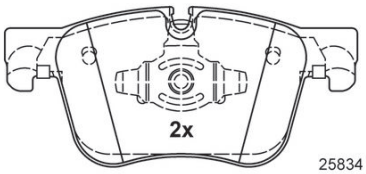

25834 17,7

155,1 x 70,5 x 17,7

Brake Pad Set, disc brake

Thickness [mm] 17.7

ATE

+ WE / - WK

Height [mm] 70.5

Width [mm] 155.1

CITROËN, DS, OPEL, PEUGEOT, TOYOTA, VAUXHALL

13.0460-7345.2 607345

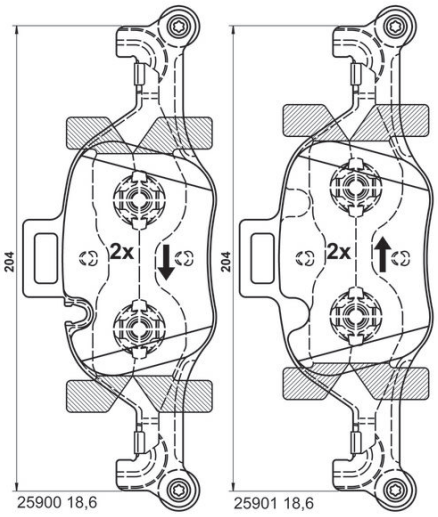

25900 18,6

25901 18,6

222,0 x 84,7 x 18,6

Brake Pad Set, disc brake

Thickness [mm] 18.6

ATE

B2= 204

B1= 222

+ WE / - WK

Height [mm] 84.7

Part number of recommended accessories: 24.8190-0824.2

BMW

© 2022 Continental Aftermarket & Services GmbH

13.0460-7347.2 607347

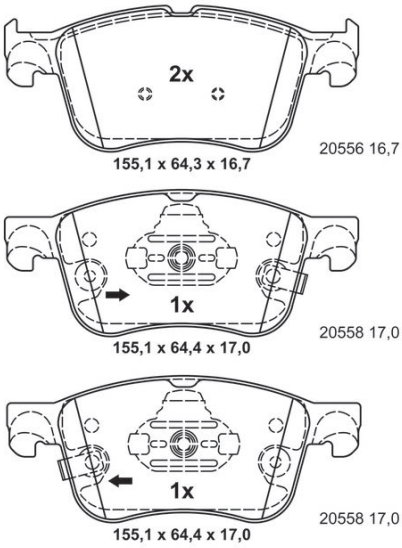

Brake Pad Set, disc brake

ATE

Thickness 2 [mm] 17

Thickness 1 [mm] 16.7

+ WK

Height [mm] 64.4

Width [mm] 155.1

2x

FORD

13.0460-8014.2 608014

Brake Pad Set, disc brake

Thickness [mm] 15.5

with anti-squeak plate
with brake caliper screws

+ Zub

+ WK

Height [mm] 68.1

Width [mm] 184.5

FORD, MAZDA

13.0470-2609.2 LD2609

Brake Pad Set, disc brake

Thickness [mm] 20.4

with brake caliper screws

TRW

+ WE / - WK

Height [mm] 64.5

Width [mm] 160

AUDI, VW

© 2022 Continental Aftermarket & Services GmbH

13.0470-2617.2 LD2617

ATE Ceramic

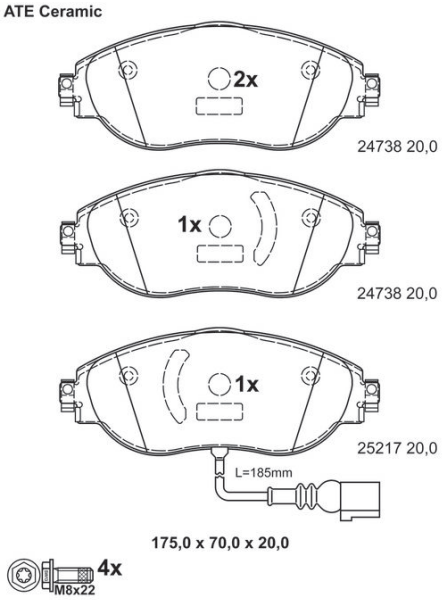

Brake Pad Set, disc brake

Thickness [mm] 20

with brake caliper screws

L= 185

TRW

+ WK

Height [mm] 70

Width [mm] 175

1x

AUDI, CUPRA, SEAT, SKODA, VW

13.0470-2785.2 LD2785

ATE Ceramic

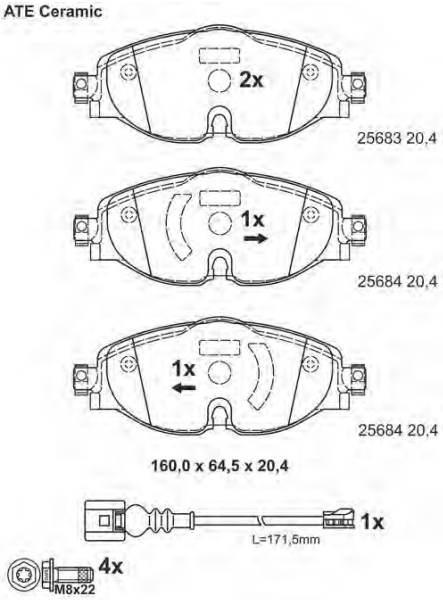

Brake Pad Set, disc brake

Thickness [mm] 20.4

with brake caliper screws

L= 171.5

TRW

+ WE / + WK

Height [mm] 64.5

Width [mm] 160

1x

AUDI, CUPRA, SEAT, SKODA, VW

13.0470-3870.2 LD3870

ATE Ceramic

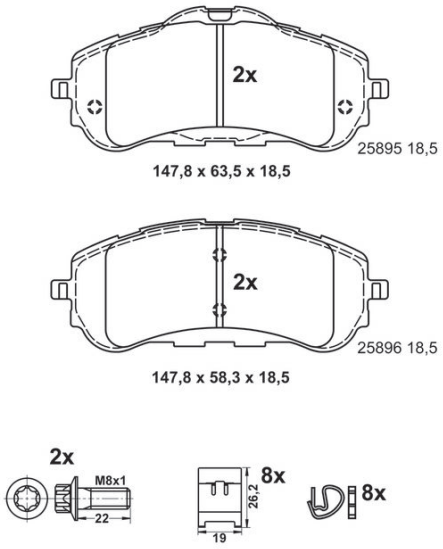

Brake Pad Set, disc brake

Thickness [mm] 18.5

with brake caliper screws

Height 1 [mm]: 58.3

BOS

+ Zub

- WE / - WK

Width [mm] 147.8

Height 2 [mm]: 63.5

CITROËN, OPEL, PEUGEOT, VAUXHALL

© 2022 Continental Aftermarket & Services GmbH

13.0470-3871.2 LD3871

ATE Ceramic

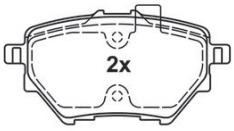

98,8 x 49,9 x 17,8

25839 17,8

98,8 x 53,5 x 17,8

25840 17,8

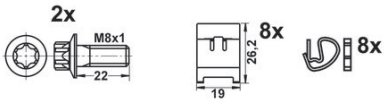

Brake Pad Set, disc brake

Thickness [mm] 17.8

with brake caliper screws

Height 1 [mm]: 49.9

BOS

+ Zub

- WE / - WK

Width [mm] 98.8

Height 2 [mm]: 53.5

CITROËN, DS, OPEL, PEUGEOT, TOYOTA, VAUXHALL

13.0470-3877.2 LD3877

Brake Pad Set, disc brake

Thickness [mm] 19.7

with brake caliper screws

BOS

+ Zub

+ WE / - WK

Height [mm] 75.8

Width [mm] 163.5

VW

13.0470-3880.2 LD3880

Brake Pad Set, disc brake

Thickness [mm] 19.1

with brake caliper screws

+ Zub

+ WE / - WK

Part number of recommended accessories: 24.8190-0831.2 / 24.8190-0994.2

Height [mm] 65.1

Width [mm] 141.2

VW

© 2022 Continental Aftermarket & Services GmbH

13.0470-3994.2 LD3994

ATE Ceramic

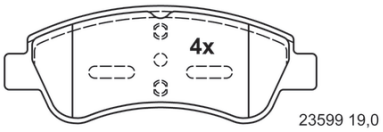

136,8 x 52,0 x 19,0

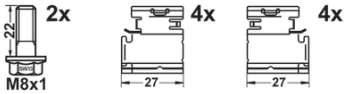

Brake Pad Set, disc brake

Thickness [mm] 19

with brake caliper screws

BOS

+ Zub

- WE / - WK

Height [mm] 52

Width [mm] 136.8

CITROËN, DS, OPEL, PEUGEOT, VAUXHALL

13.0470-4700.2 LD4700

Brake Pad Set, disc brake

Thickness [mm] 16.9

BRE

+ WE / - WK

Height [mm] 81.3

Part number of recommended accessories: 24.8190-0809.2

Width [mm] 135.6

AUDI

13.0470-5511.2 LD5511

Brake Pad Set, disc brake

Thickness [mm] 17

TRW

+ Zub

+ WK

Height [mm] 61.5

Width [mm] 141.8

OPEL, VAUXHALL

13.0470-5512.2 LD5512

Brake Pad Set, disc brake

Thickness [mm] 19.2

TRW

+ Zub

+ WK

Height [mm] 64.3

Width [mm] 142

OPEL, VAUXHALL

© 2022 Continental Aftermarket & Services GmbH

13.0470-5523.2 LD5523

Brake Pad Set, disc brake

Thickness [mm] 17

with brake caliper screws

Height 1 [mm]: 73.2

+ Zub

+ WE / - WK

Width [mm] 110.6

Height 2 [mm]: 65.9

BMW, TOYOTA

13.0470-7193.2 LD7193

ATE Ceramic

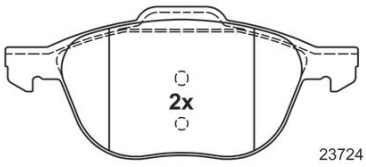

23724 18,1

156,3 x 67,0 x 18,1

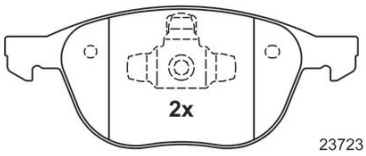

23723 18,1

155,1 x 62,4 x 18,1

Brake Pad Set, disc brake

Thickness [mm] 18.1

Height 1 [mm]: 62.4

ATE

B2= 156.3

B1= 155.1

- WE / - WK

Height 2 [mm]: 67

FORD, MAZDA, VOLVO

13.0470-7266.2 LD7266

ATE Ceramic

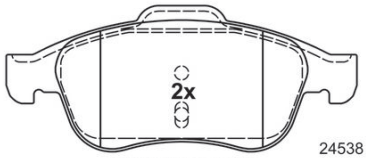

24538 17,9

155,1 x 64,7 x 17,9

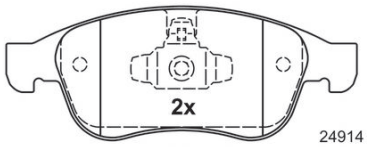

24914 17,9

155,1 x 59,4 x 17,9

Brake Pad Set, disc brake

Thickness [mm] 17.9

Height 1 [mm]: 64.7

ATE

B2= 155.1

B1= 155.1

- WE / - WK

Height 2 [mm]: 59.4

DACIA, NISSAN, RENAULT

© 2022 Continental Aftermarket & Services GmbH

13.0470-7293.2 LD7293

ATE Ceramic

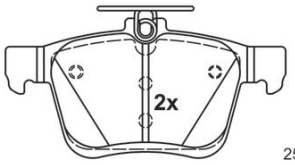

25008 16,3

123,0 x 61,2 x 16,3

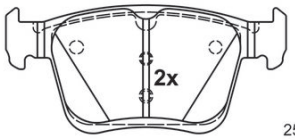

25010 16,3

123,0 x 56,2 x 16,3

Brake Pad Set, disc brake

Thickness [mm] 16.3

Height 1 [mm]: 61.2

ATE

B2= 123

B1= 123

- WE / - WK

Height 2 [mm]: 56.2

AUDI, SEAT, SKODA, VW

13.0470-7294.2 LD7294

ATE Ceramic

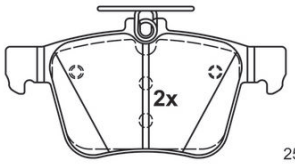

25009 16,4

123,0 x 61,2 x 16,4

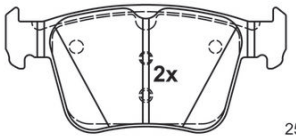

25011 16,4

123,0 x 56,2 x 16,4

Brake Pad Set, disc brake

Thickness [mm] 16.4

Height 1 [mm]: 61.2

ATE

B2= 123

B1= 123

- WE / - WK

Height 2 [mm]: 56.2

AUDI, CUPRA, SEAT, SKODA, VW

13.0470-7299.2 LD7299

ATE Ceramic

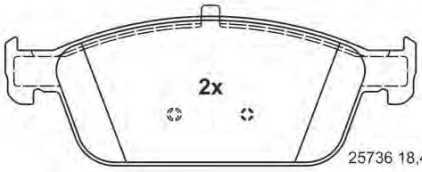

25736 18,4

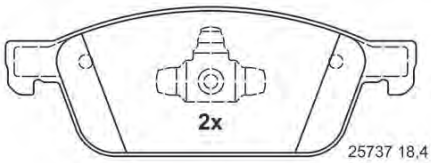

25737 18,4

180,1 x 65,5 x 18,4

Brake Pad Set, disc brake

Thickness [mm] 18.4

ATE

- WE / - WK

Height [mm] 65.5

Width [mm] 180.1

FORD

© 2022 Continental Aftermarket & Services GmbH

13.0470-7347.2 LD7347

Brake Pad Set, disc brake

ATE

Thickness 2 [mm] 17

Thickness 1 [mm] 16.7

+ WK

Height [mm] 64.4

Width [mm] 155.1

2x

FORD

24.0109-0123.1 409123

Brake Disc

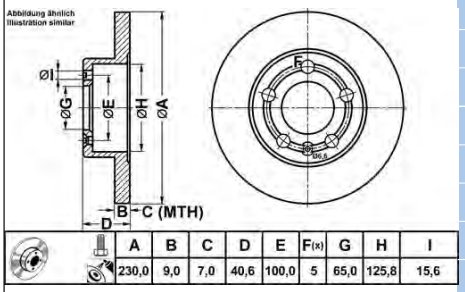

A	B	C	D	E	F(x)	G	H	I
230,0	9,0	7,0	40,6	100,0	5	65,0	125,8	15,6

Ø 125.8

Minimum thickness [mm] 7

+ S

Brake Disc Thickness [mm] 9

SurfaceB

Centering Diameter [mm]: 65

Number of Holes: 5

Bore Ø [mm] 15.6

Bolt Hole Circle Ø [mm]: 100

Height [mm] 40.6

Ø 230

AUDI, SEAT, SKODA, VW

24.0109-0129.1 409129

Brake Disc

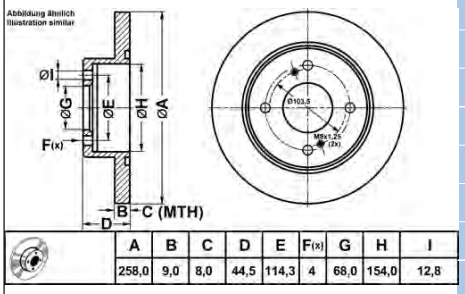

A	B	C	D	E	F(x)	G	H	I
258,0	9,0	8,0	44,5	114,3	4	68,0	154,0	12,8

Ø 154

Minimum thickness [mm] 8

Brake Disc Thickness [mm] 9

Centering Diameter [mm]: 68

Number of Holes: 4

Bore Ø [mm] 12.8

Bolt Hole Circle Ø [mm]: 114.3

Height [mm] 44.5

Ø 258

NISSAN

© 2022 Continental Aftermarket & Services GmbH

24.0109-0132.1 409132

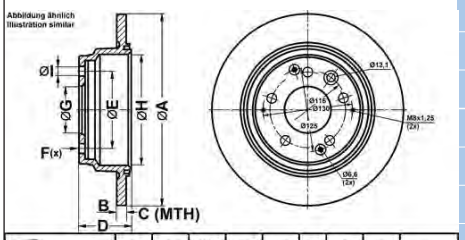

A	B	C	D	E	F(x)	G	H	I
282,0	9,0	7,5	61,0	114,3	5	70,0	170,0	12,6

Brake Disc

Ø 170

Minimum thickness [mm] 7.5

Brake Disc Thickness [mm] 9

Centering Diameter [mm]: 70

Number of Holes: 5

Bore Ø [mm] 12.6

Bolt Hole Circle Ø [mm]: 114.3

Height [mm] 61

Ø 282

HONDA

24.0109-0145.1 409145

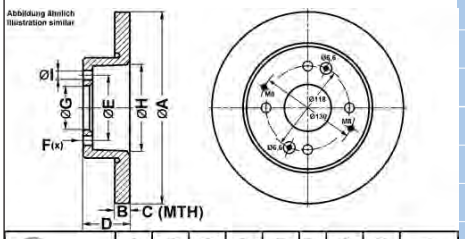

A	B	C	D	E	F(x)	G	H	I
260,0	9,0	8,0	48,1	114,3	4	64,1	157,0	12,6

Brake Disc

Ø 157

Minimum thickness [mm] 8

Brake Disc Thickness [mm] 9

Centering Diameter [mm]: 64.1

Number of Holes: 4

Bore Ø [mm] 12.6

Bolt Hole Circle Ø [mm]: 114.3

Height [mm] 48.1

Ø 260

HONDA

24.0110-0356.1 410356

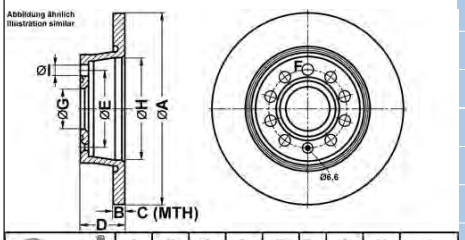

A	B	C	D	E	F(x)	G	H	I
272,0	9,7	8,0	48,2	112,0	9	65,0	174,5	15,3

Brake Disc

Ø 174.5

Minimum thickness [mm] 8

+ S

Brake Disc Thickness [mm] 9.7

SurfaceB

Centering Diameter [mm]: 65

Number of Holes: 9

Bore Ø [mm] 15.3

Bolt Hole Circle Ø [mm]: 112

Height [mm] 48.2

Ø 272

AUDI, CUPRA, SEAT, SKODA, VW

© 2022 Continental Aftermarket & Services GmbH

24.0110-0398.1 410398

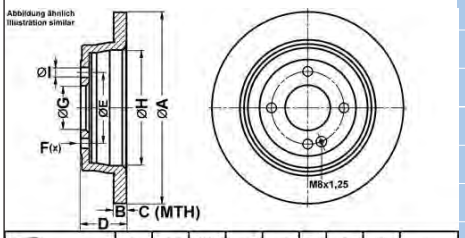

A	B	C	D	E	F(x)	G	H	I
262,0	10,0	8,4	44,0	100,0	4	62,5	162,0	12,6

Brake Disc

Ø 162

Minimum thickness [mm] 8.4

Machining: HC

Brake Disc Thickness [mm] 10

SurfaceB

Centering Diameter [mm]: 62.5

Number of Holes: 4

Bore Ø [mm] 12.6

Bolt Hole Circle Ø [mm]: 100

Height [mm] 44

Ø 262

HYUNDAI, KIA

24.0110-0409.1 410409

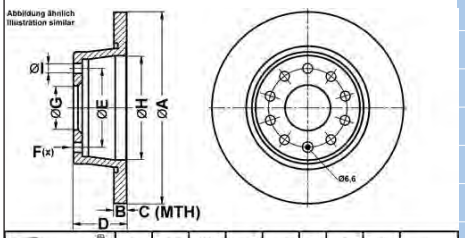

A	B	C	D	E	F(x)	G	H	I
272,0	10,0	8,0	58,3	112,0	5/9	65,0	140,0	15,2

Brake Disc

Ø 140

Minimum thickness [mm] 8

+ S

Brake Disc Thickness [mm] 10

SurfaceB

Centering Diameter [mm]: 65

Number of Holes: 5

Bore Ø [mm] 15.2

Bolt Hole Circle Ø [mm]: 112

Height [mm] 58.3

Ø 272

AUDI, SEAT, SKODA, VW

24.0111-0159.1 411159

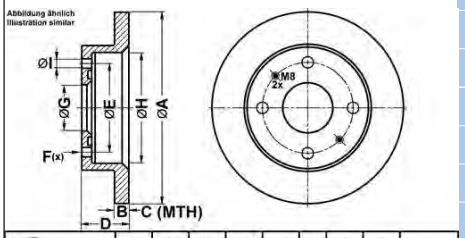

A	B	C	D	E	F(x)	G	H	I
211,0	11,0	10,0	40,9	100,0	4	55,1	125,0	13,2

Brake Disc

Ø 125

Minimum thickness [mm] 10

Brake Disc Thickness [mm] 11

SurfaceB

Centering Diameter [mm]: 55.1

Number of Holes: 4

Bore Ø [mm] 13.2

Bolt Hole Circle Ø [mm]: 100

Height [mm] 40.9

Ø 211

DAIHATSU

© 2022 Continental Aftermarket & Services GmbH

24.0111-0192.1 411192

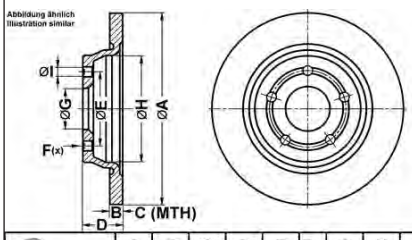

A	B	C	D	E	F(x)	G	H	I
271,0	11,0	9,0	40,8	108,0	5	63,5	156,0	13,8

Brake Disc

Ø 156

Minimum thickness [mm] 9

Brake Disc Thickness [mm] 11

SurfaceB

Centering Diameter [mm]: 63.5

Number of Holes: 5

Bore Ø [mm] 13.8

Bolt Hole Circle Ø [mm]: 108

Height [mm] 40.8

Ø 271

FORD

24.0112-0210.1 412210

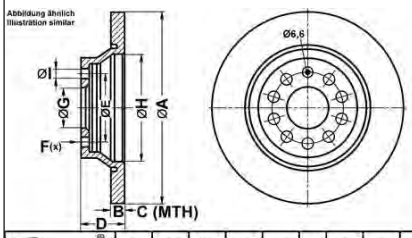

A	B	C	D	E	F(x)	G	H	I
300,0	12,0	10,0	48,2	112,0	5/9	65,0	173,0	15,3

Brake Disc

Ø 173

Minimum thickness [mm] 10

+ S

Brake Disc Thickness [mm] 12

SurfaceB

Centering Diameter [mm]: 65

Number of Holes: 5

Bore Ø [mm] 15.3

Bolt Hole Circle Ø [mm]: 112

Height [mm] 48.2

Ø 300

AUDI, SEAT, SKODA, VW

24.0116-0122.1 416122

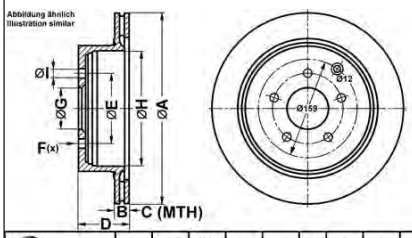

A	B	C	D	E	F(x)	G	H	I
308,0	16,0	14,0	62,0	114,3	5	68,0	190,0	12,8

Brake Disc

Ø 190

Minimum thickness [mm] 14

Brake Disc Thickness [mm] 16

SurfaceB

Centering Diameter [mm]: 68

Number of Holes: 5

Bore Ø [mm] 12.8

Bolt Hole Circle Ø [mm]: 114.3

Height [mm] 62

Vented

Ø 308

INFINITI, NISSAN

© 2022 Continental Aftermarket & Services GmbH

24.0118-0122.1 418122

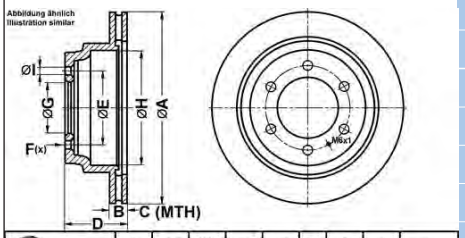

A	B	C	D	E	F(x)	G	H	I
313,5	18,0	16,6	80,2	139,6	6	101,0	210,0	12,6

Brake Disc

Ø 210

Minimum thickness [mm] 16.6

Brake Disc Thickness [mm] 18

SurfaceB

Centering Diameter [mm]: 101

Number of Holes: 6

Bore Ø [mm] 12.6

Bolt Hole Circle Ø [mm]: 139.6

Height [mm] 80.2

Vented

Ø 313.5

ISUZU, OPEL, VAUXHALL

24.0122-0146.1 422146

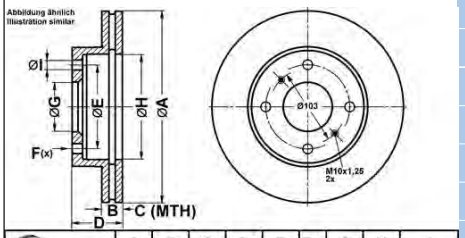

A	B	C	D	E	F(x)	G	H	I
257,0	22,0	20,0	49,2	114,3	4	68,0	144,0	12,6

Brake Disc

Ø 144

Minimum thickness [mm] 20

Brake Disc Thickness [mm] 22

SurfaceB

Centering Diameter [mm]: 68

Number of Holes: 4

Bore Ø [mm] 12.6

Bolt Hole Circle Ø [mm]: 114.3

Height [mm] 49.2

Vented

Ø 257

NISSAN

24.0122-0194.1 422194

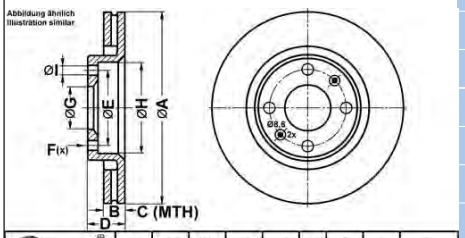

A	B	C	D	E	F(x)	G	H	I
266,0	22,0	20,0	34,2	108,0	4	66,0	133,1	13,0

Brake Disc

Ø 133.1

Minimum thickness [mm] 20

+ S

Brake Disc Thickness [mm] 22

SurfaceB

Centering Diameter [mm]: 66

Number of Holes: 4

Bore Ø [mm] 13

Bolt Hole Circle Ø [mm]: 108

Height [mm] 34.2

Vented

Ø 266

CITROËN, DS, OPEL, PEUGEOT, VAUXHALL

© 2022 Continental Aftermarket & Services GmbH

24.0122-0219.1 422219

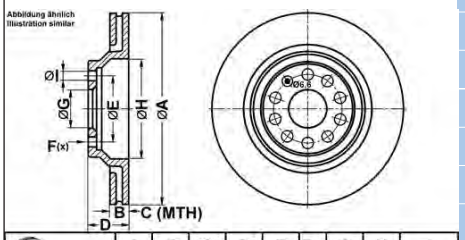

A	B	C	D	E	F(x)	G	H	I
310,0	22,0	20,0	48,5	112,0	5/9	65,0	169,0	15,3

Brake Disc

Ø 169

Minimum thickness [mm] 20

Machining: HC

Brake Disc Thickness [mm] 22

SurfaceB

Centering Diameter [mm]: 65

Number of Holes: 5

Bore Ø [mm] 15.3

Bolt Hole Circle Ø [mm]: 112

Height [mm] 48.5

Vented

Ø 310

AUDI, CUPRA, SEAT, SKODA, VW

24.0122-0312.1 422312

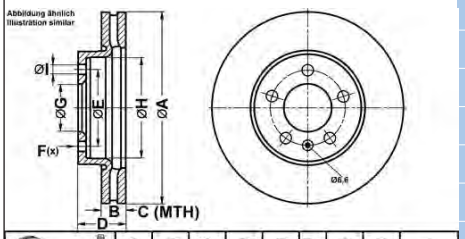

A	B	C	D	E	F(x)	G	H	I
256,0	22,0	19,0	44,1	100,0	5	65,0	134,0	15,5

Brake Disc

Ø 134

Minimum thickness [mm] 19

Machining: HC L

+ S

Brake Disc Thickness [mm] 22

SurfaceB

Centering Diameter [mm]: 65

Number of Holes: 5

Bore Ø [mm] 15.5

Bolt Hole Circle Ø [mm]: 100

Height [mm] 44.1

Vented

Ø 256

AUDI, SEAT, SKODA, VW

24.0124-0263.1 424263

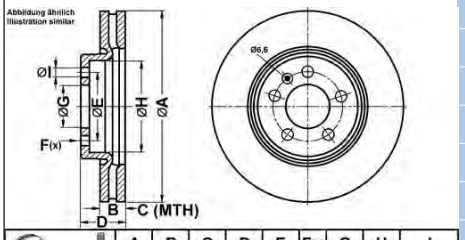

A	B	C	D	E	F(x)	G	H	I
275,7	24,0	21,0	44,1	100,0	5	65,0	136,0	15,4

Brake Disc

Ø 100

Minimum thickness [mm] 21

Machining: HC

+ S

Brake Disc Thickness [mm] 24

SurfaceB

Centering Diameter [mm]: 65

Number of Holes: 5

Bore Ø [mm] 15.4

Bolt Hole Circle Ø [mm]: 110

Height [mm] 44.1

Vented

Ø 275.7

AUDI, SEAT, SKODA, VW

© 2022 Continental Aftermarket & Services GmbH

24.0125-0145.1 425145

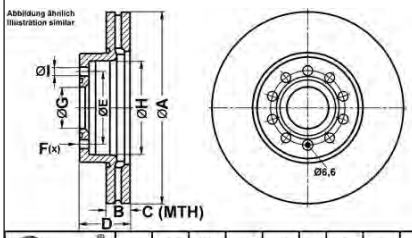

A	B	C	D	E	F(x)	G	H	I
288,0	25,0	22,0	49,9	112,0	5/9	65,0	144,0	15,3

Brake Disc

Ø 144

Minimum thickness [mm] 22

Machining: HC

+ S

Brake Disc Thickness [mm] 25

SurfaceB

Centering Diameter [mm]: 65

Number of Holes: 5

Bore Ø [mm] 15.3

Bolt Hole Circle Ø [mm]: 112

Height [mm] 49.9

Vented

Ø 288

AUDI, CUPRA, SEAT, SKODA, VW

24.0125-0158.1 425158

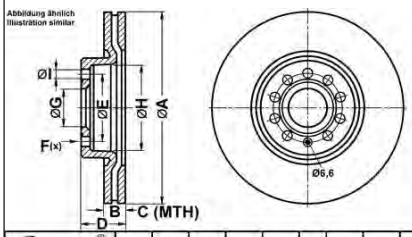

A	B	C	D	E	F(x)	G	H	I
312,0	25,0	22,0	49,9	112,0	5/9	65,0	146,0	15,3

Brake Disc

Ø 146

Minimum thickness [mm] 22

Machining: HC

+ S

Brake Disc Thickness [mm] 25

SurfaceB

Centering Diameter [mm]: 65

Number of Holes: 5

Bore Ø [mm] 15.3

Bolt Hole Circle Ø [mm]: 112

Height [mm] 49.9

Vented

Ø 312

AUDI, CUPRA, SEAT, SKODA, VW

24.0126-0187.1 426187

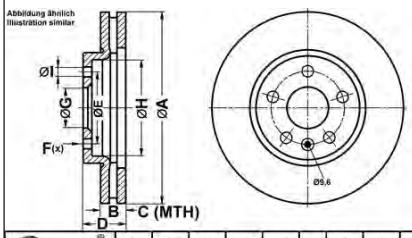

A	B	C	D	E	F(x)	G	H	I
276,0	26,0	23,0	45,5	105,0	5	60,0	139,0	14,0

Brake Disc

Ø 139

Minimum thickness [mm] 23

+ S

Brake Disc Thickness [mm] 26

SurfaceB

Centering Diameter [mm]: 60

Number of Holes: 5

Bore Ø [mm] 14

Bolt Hole Circle Ø [mm]: 105

Height [mm] 45.5

Vented

Ø 276

CHEVROLET, OPEL, VAUXHALL

© 2022 Continental Aftermarket & Services GmbH

24.0128-0309.1 428309

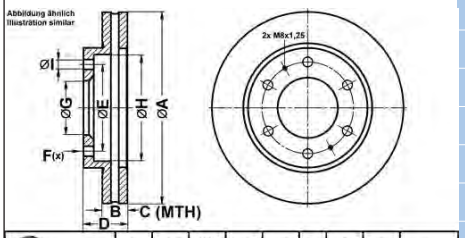

A	B	C	D	E	F(x)	G	H	I
294,0	28,2	26,4	46,6	139,7	6	94,1	171,0	12,6

Brake Disc

Ø 171

Minimum thickness [mm] 26.4

Brake Disc Thickness [mm] 28.2

SurfaceB

Centering Diameter [mm]: 94.1

Number of Holes: 6

Bore Ø [mm] 12.6

Bolt Hole Circle Ø [mm]: 139.7

Height [mm] 46.6

Vented

Ø 294

FIAT, MITSUBISHI

24.0130-0220.1 430220

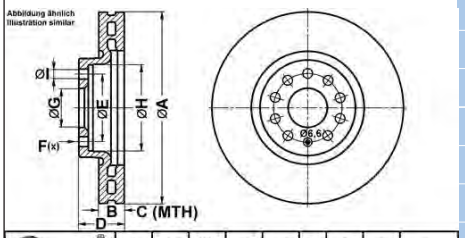

A	B	C	D	E	F(x)	G	H	I
314,0	30,0	27,0	49,6	112,0	9	65,0	145,0	15,3

Brake Disc

Ø 145

Minimum thickness [mm] 27

Machining: HC

+ S

Brake Disc Thickness [mm] 30

SurfaceB

Centering Diameter [mm]: 65

Number of Holes: 9

Bore Ø [mm] 15.3

Bolt Hole Circle Ø [mm]: 112

Height [mm] 49.6

Vented

Ø 314

SEAT, SKODA, VW

24.0130-0225.1 430225

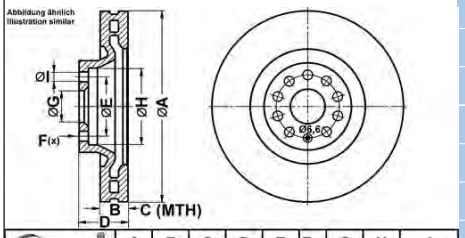

A	B	C	D	E	F(x)	G	H	I
340,0	30,0	27,0	49,6	112,0	5/9	65,0	145,0	15,3

Brake Disc

Ø 145

Minimum thickness [mm] 27

Machining: HC

+ S

Brake Disc Thickness [mm] 30

SurfaceB

Centering Diameter [mm]: 65

Number of Holes: 5

Bore Ø [mm] 15.3

Bolt Hole Circle Ø [mm]: 112

Height [mm] 49.6

Vented

Ø 340

AUDI, CUPRA, SEAT, SKODA, VW

© 2022 Continental Aftermarket & Services GmbH

24.0132-0176.1 432176

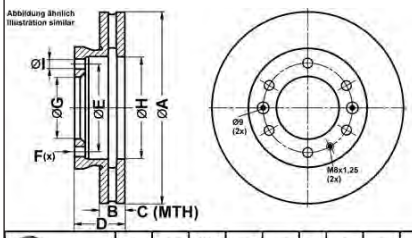

A	B	C	D	E	F(x)	G	H	I
302,0	32,0	30,0	61,0	140,0	6	98,0	164,0	13,2

Brake Disc

Ø 164

Minimum thickness [mm] 30

Brake Disc Thickness [mm] 32

SurfaceB

Centering Diameter [mm]: 98

Number of Holes: 6

Bore Ø [mm] 13.2

Bolt Hole Circle Ø [mm]: 140

Height [mm] 61

Vented

Ø 302

FORD, MAZDA

24.0325-0158.1 525158

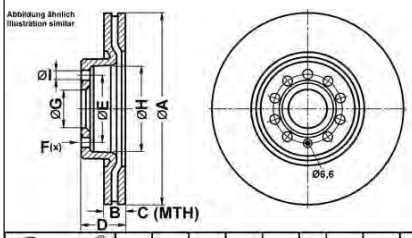

A	B	C	D	E	F(x)	G	H	I
312,0	25,0	22,0	49,9	112,0	5/9	65,0	146,0	15,3

Brake Disc

Ø 146

Minimum thickness [mm] 22

Machining: HC

+ S

Brake Disc Thickness [mm] 25

SurfaceB

Centering Diameter [mm]: 65

Number of Holes: 5

Bore Ø [mm] 15.3

Bolt Hole Circle Ø [mm]: 112

Height [mm] 49.9

Vented

Ø 312

AUDI, SEAT, SKODA, VW

24.0710-2055.3 360576

Sensor, wheel speed

L= 564

L= 680

BMW

24.0711-5273.3 360303

Sensor, wheel speed

without cable

AUDI, CUPRA, SEAT, SKODA, VW

24.0711-5274.3 360304

Sensor, wheel speed

without cable

AUDI, CUPRA, SEAT, SKODA, VW

24.0711-5369.3 360378

Sensor, wheel speed

L= 619

DACIA, RENAULT

24.0711-5401.3 360330

Sensor, wheel speed

without cable

AUDI, CUPRA, PORSCHE, SEAT, SKODA, VW

24.0711-5402.3 360331

Sensor, wheel speed

without cable

AUDI, CUPRA, PORSCHE, SEAT, SKODA, VW

© 2022 Continental Aftermarket & Services GmbH

24.0711-6337.3 360390

Sensor, wheel speed

without cable

AUDI, CUPRA, SEAT, SKODA, VW

24.2119-1712.3 010912

Brake Master Cylinder

without brake fluid reservoir

2x

M12x1

L2= 140

L1= 38.5

Ø 19

SKODA, VW

24.2519-1706.3 040096

Slave Cylinder, clutch

Plastic

Ø 19

AUDI, SEAT, SKODA, VW

24.3217-1741.3 020611

Wheel Brake Cylinder

ALU

Piston Diameter [mm]: 17.5

KIA

24.3217-1742.3 020612

Wheel Brake Cylinder

ALU

Piston Diameter [mm]: 17.5

KIA

24.3219-1769.3 020610

Wheel Brake Cylinder

ALU

Piston Diameter [mm]: 19

SUZUKI

24.3219-1772.3 020608

Wheel Brake Cylinder

ALU

Piston Diameter [mm]: 19

SUZUKI

24.3220-1703.3 020391

Wheel Brake Cylinder

GG

Piston Diameter [mm]: 20.6

NISSAN

24.3220-1743.3 020556

Wheel Brake Cylinder

ALU

Piston Diameter [mm]: 20.6

CITROËN, OPEL, PEUGEOT, VAUXHALL

© 2022 Continental Aftermarket & Services GmbH

24.3220-1757.3 020605

Wheel Brake Cylinder

ALU

Piston Diameter [mm]: 20.6

AUDI, FIAT, FORD, SEAT, SKODA, VW

24.3220-1759.3 020609

Wheel Brake Cylinder

ALU

Piston Diameter [mm]: 20.6

OPEL, VAUXHALL

24.3222-1729.3 020526

Wheel Brake Cylinder

ALU

Piston Diameter [mm]: 22.2

DACIA, MERCEDES-BENZ, RENAULT

24.3223-1711.3 020570

Wheel Brake Cylinder

GG

Piston Diameter [mm]: 23.8

FORD, MAZDA

© 2022 Continental Aftermarket & Services GmbH

24.3321-1703.5 241381

Brake Caliper

without holder

Service exchange part

Piston Diameter [mm]: 32

CHEVROLET, DAEWOO

24.3321-1704.5 241382

Brake Caliper

without holder

Service exchange part

Piston Diameter [mm]: 32

CHEVROLET, DAEWOO

24.3344-1739.5 241371

Brake Caliper

without holder

Service exchange part

Piston Diameter [mm]: 34

+ FSB

HYUNDAI, KIA

24.3344-1740.5 241372

Brake Caliper

without holder

Service exchange part

Piston Diameter [mm]: 34

+ FSB

HYUNDAI, KIA

24.3344-1741.5 241409

Brake Caliper

without holder

Service exchange part

Piston Diameter [mm]: 34

+ FSB

HONDA

© 2022 Continental Aftermarket & Services GmbH

24.3344-1742.5 241410

Brake Caliper

without holder

Service exchange part

Piston Diameter [mm]: 34

+ FSB

HONDA

24.3367-1717.5 241405

Brake Caliper

BOS

without holder

Service exchange part

Piston Diameter [mm]: 36

ABARTH, FIAT, OPEL, VAUXHALL

24.3367-1718.5 241406

Brake Caliper

BOS

without holder

Service exchange part

Piston Diameter [mm]: 36

ABARTH, FIAT, OPEL, VAUXHALL

24.3382-1705.5 241321

Brake Caliper

BOS

without holder

Service exchange part

Piston Diameter [mm]: 38

RENAULT

24.3382-1706.5 241322

Brake Caliper

BOS

without holder

Service exchange part

Piston Diameter [mm]: 38

RENAULT

© 2022 Continental Aftermarket & Services GmbH

24.3386-1705.5 241407

Brake Caliper

without holder

Service exchange part

Piston Diameter [mm]: 38

ALU

TOYOTA

24.3386-1706.5 241408

Brake Caliper

without holder

Service exchange part

Piston Diameter [mm]: 38

ALU

TOYOTA

24.3421-1717.5 241375

Brake Caliper

without holder

Service exchange part

Piston Diameter [mm]: 41

HYUNDAI

24.3421-1718.5 241376

Brake Caliper

without holder

Service exchange part

Piston Diameter [mm]: 41

HYUNDAI

24.3431-1717.5 241365

Brake Caliper

MAN

without holder

Service exchange part

Piston Diameter [mm]: 43

HYUNDAI, KIA

© 2022 Continental Aftermarket & Services GmbH

24.3431-1718.5 241366

Brake Caliper

MAN

without holder

Service exchange part

Piston Diameter [mm]: 43

HYUNDAI, KIA

24.3431-1721.5 241425

Brake Caliper

without holder

Service exchange part

Piston Diameter [mm]: 43

NISSAN, RENAULT

24.3431-1722.5 241426

Brake Caliper

without holder

Service exchange part

Piston Diameter [mm]: 43

NISSAN, RENAULT

24.3481-1797.5 241395

Brake Caliper

ATE

without holder

Service exchange part

Piston Diameter [mm]: 48

JEEP

24.3481-1798.5 241396

Brake Caliper

ATE

without holder

Service exchange part

Piston Diameter [mm]: 48

JEEP

© 2022 Continental Aftermarket & Services GmbH

24.3511-1725.5 241399

Brake Caliper

MAN

without holder

Service exchange part

Piston Diameter [mm]: 51

HYUNDAI

24.3511-1726.5 241400

Brake Caliper

MAN

without holder

Service exchange part

Piston Diameter [mm]: 51

HYUNDAI

24.3541-1862.5 241278

Brake Caliper

TRW

without holder

Service exchange part

Piston Diameter [mm]: 54

BMW, MINI

24.3541-1877.5 241413

Brake Caliper

without holder

Service exchange part

Piston Diameter [mm]: 54

FORD

24.3541-1878.5 241414

Brake Caliper

without holder

Service exchange part

Piston Diameter [mm]: 54

FORD

© 2022 Continental Aftermarket & Services GmbH

24.3541-1879.5 241429

Brake Caliper

ATE

without holder

Service exchange part

Piston Diameter [mm]: 54

RENAULT

24.3571-1799.5 241385

Brake Caliper

without holder

Service exchange part

Piston Diameter [mm]: 57

NISSAN, RENAULT

24.3571-1800.5 241386

Brake Caliper

without holder

Service exchange part

Piston Diameter [mm]: 57

NISSAN, RENAULT

24.3571-1801.5 241387

Brake Caliper

without holder

Service exchange part

Piston Diameter [mm]: 57

AUDI, CUPRA, SEAT, SKODA, VW

24.3571-1802.5 241388

Brake Caliper

without holder

Service exchange part

Piston Diameter [mm]: 57

AUDI, CUPRA, SEAT, SKODA, VW

24.3601-1727.5 240786

Brake Caliper

TRW

without holder

Service exchange part

Piston Diameter [mm]: 60

AUDI, SEAT, SKODA, VW

24.3601-1728.5 240787

Brake Caliper

TRW

without holder

Service exchange part

Piston Diameter [mm]: 60

AUDI, SEAT, SKODA, VW

24.3601-1745.5 241389

Brake Caliper

without holder

Service exchange part

Piston Diameter [mm]: 60

HYUNDAI

24.3601-1746.5 241390

Brake Caliper

without holder

Service exchange part

Piston Diameter [mm]: 60

HYUNDAI

24.3601-1747.5 241401

Brake Caliper

ADV

without holder

Service exchange part

Piston Diameter [mm]: 60

TOYOTA

© 2022 Continental Aftermarket & Services GmbH

24.3601-1748.5 241402

Brake Caliper

ADV

without holder

Service exchange part

Piston Diameter [mm]: 60

TOYOTA

24.3727-0688.2 580688

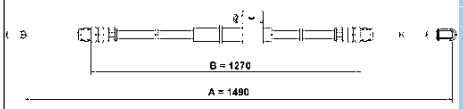

Cable Pull, parking brake

L= 1,490

FORD

24.3727-2118.2 582118

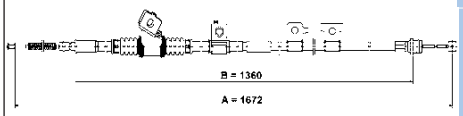

Cable Pull, parking brake

L= 1,672

MITSUBISHI

24.3727-2125.2 582125

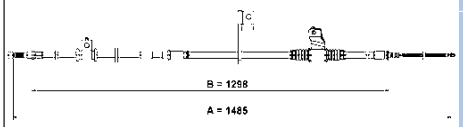

Cable Pull, parking brake

L= 1,485

MITSUBISHI

24.4120-1711.3 011093

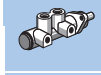

Brake Master Cylinder

without brake fluid reservoir

2x

M10x1

L2= 87.4

L1= 32

Cast Aluminium

Ø 20.6

FORD

24.4120-1712.3 011092

Brake Master Cylinder

without brake fluid reservoir
2x
M10x1
L2= 85.4
L1= 32
Cast Aluminium
Ø 20.6

CITROËN, PEUGEOT, TOYOTA

24.4123-1719.3 011017

Brake Master Cylinder

without brake fluid reservoir
TRW
2x
M12x1
L2= 126
L1= 5
Ø 23.8

AUDI, CUPRA, SEAT, SKODA, VW

24.4123-1728.3 011089

Brake Master Cylinder

without brake fluid reservoir
2x
M12x1
L2= 91
L1= 20
Cast Aluminium
Ø 23.8

NISSAN

24.4426-7001.5 230159

Brake Caliper

Brake Caliper Colour: Black
without brake pads
ATE
Service exchange part
Piston Diameter [mm]: 42
ALU

AUDI

© 2022 Continental Aftermarket & Services GmbH

24.4426-7002.5 230160

Brake Caliper

Brake Caliper Colour: Black
without brake pads
ATE
Service exchange part
Piston Diameter [mm]: 42
ALU

AUDI

24.4426-7017.5 230165

Brake Caliper

without brake pads
ATE
Service exchange part
Piston Diameter [mm]: 42
ALU

AUDI

24.4426-7018.5 230166

Brake Caliper

without brake pads
ATE
Service exchange part
Piston Diameter [mm]: 42
ALU

AUDI

24.4426-7019.5 230161

Brake Caliper

without brake pads
ATE
Service exchange part
Piston Diameter [mm]: 42
ALU

AUDI

24.4426-7020.5 230162

Brake Caliper

without brake pads
ATE
Service exchange part
Piston Diameter [mm]: 42
ALU

AUDI

24.4446-7002.5 230156

Brake Caliper

Brake Caliper Colour: Grey

without brake pads

ATE

Service exchange part

Piston Diameter [mm]: 44

ALU

AUDI

24.5101-0223.3 331616

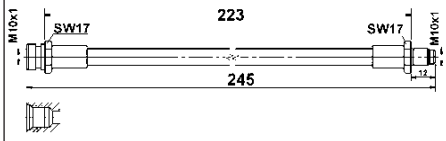

Brake Hose

L= 223

L= 245

Spanner size 1 [mm]: 17

MITSUBISHI

24.5111-0450.3 331557

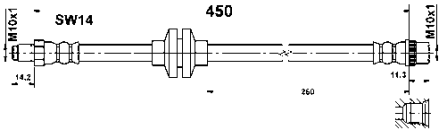

Brake Hose

L= 450

Spanner size 1 [mm]: 14

DACIA, RENAULT

24.5118-0688.3 331419

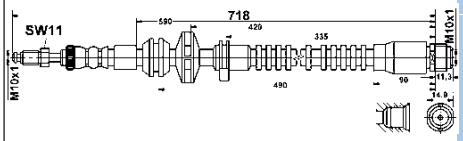

Brake Hose

L= 718

Spanner size 1 [mm]: 11

BMW, PORSCHE

24.5143-0584.3 331540

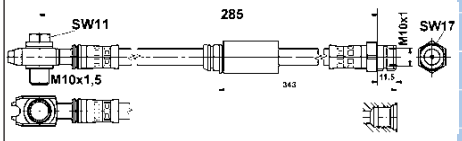

Brake Hose

with hollow screw

M10x1,5

L= 584

Spanner size 2 [mm]: 17

Spanner size 1 [mm]: 11

VW

© 2022 Continental Aftermarket & Services GmbH

24.5170-0285.3 331554

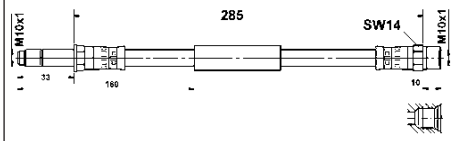

Brake Hose

L= 285

Spanner size 1 [mm]: 14

BMW, PORSCHE

24.5176-0415.3 331618

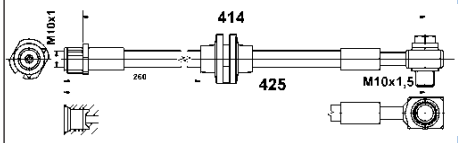

Brake Hose

Flange Hole Diameter [mm]: 10

L= 425

with hollow screw

M10x1,5

L= 415

OPEL, VAUXHALL

24.5176-0444.3 331619

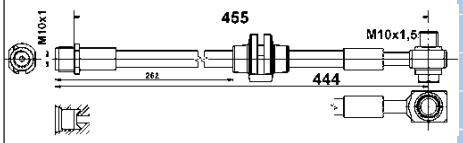

Brake Hose

Flange Hole Diameter [mm]: 10

L= 455

with hollow screw

M10x1,5

L= 445

OPEL, VAUXHALL

24.5201-0288.3 331621

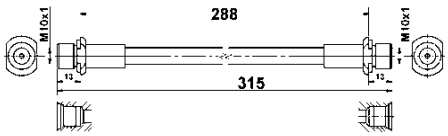

Brake Hose

L= 315

L= 288

TOYOTA

24.6238-7023.5 241241

Brake Caliper

Brake Caliper Colour: Ultra Marine Blue

ATE

without holder

Service exchange part

Piston Diameter [mm]: 38

+ eFSB

AUDI, SEAT, SKODA, VW

24.6238-7024.5 241242

Brake Caliper

Brake Caliper Colour: Ultra Marine Blue

ATE

without holder

Service exchange part

Piston Diameter [mm]: 38

+ eFSB

AUDI, SEAT, SKODA, VW

24.6238-7047.5 241181

Brake Caliper

ATE

without holder

Service exchange part

Piston Diameter [mm]: 38

+ eFSB

AUDI, SEAT, SKODA, VW

24.6238-7048.5 241182

Brake Caliper

ATE

without holder

Service exchange part

Piston Diameter [mm]: 38

+ eFSB

AUDI, SEAT, SKODA, VW

24.6242-7001.5 241335

Brake Caliper

ATE

+ EMot
without holder

Service exchange part

Piston Diameter [mm]: 42

+ eFSB

AUDI, SKODA, VW

24.6242-7002.5 241336

Brake Caliper

ATE

+ EMot
without holder

Service exchange part

Piston Diameter [mm]: 42

+ eFSB

AUDI, SKODA, VW

© 2022 Continental Aftermarket & Services GmbH

24.6242-7005.5 241337

Brake Caliper

ATE

+ EMot
without holder

Service exchange part

Piston Diameter [mm]: 42

+ eFSB

AUDI, SEAT, SKODA, VW

24.6242-7006.5 241338

Brake Caliper

ATE

+ EMot
without holder

Service exchange part

Piston Diameter [mm]: 42

+ eFSB

AUDI, SEAT, SKODA, VW

24.6242-7017.5 241185

Brake Caliper

Brake Caliper Colour: Red

ATE

without holder

Service exchange part

Piston Diameter [mm]: 42

+ eFSB

AUDI, SEAT, SKODA, VW

24.6242-7018.5 241186

Brake Caliper

Brake Caliper Colour: Red

ATE

without holder

Service exchange part

Piston Diameter [mm]: 42

+ eFSB

AUDI, SEAT, SKODA, VW

24.8190-0065.2 620065

Warning Contact, brake pad wear

Disc Brake

L= 172

AUDI, CUPRA, SEAT, SKODA, VW

24.8190-0808.2 620808

Warning Contact, brake pad wear

Disc Brake

L= 763

BMW

24.8190-0810.2 620810

Warning Contact, brake pad wear

Disc Brake

L= 798

BMW

24.8190-0818.2 620818

Warning Contact, brake pad wear

L2= 483

L1= 677

Disc Brake

L= 1,160

LAND ROVER

24.8190-0819.2 620819

Warning Contact, brake pad wear

L2= 363

L1= 989

Disc Brake

L= 1,352

LAND ROVER

24.8190-0822.2 620822

Warning Contact, brake pad wear

Disc Brake

L= 970

LAND ROVER

© 2022 Continental Aftermarket & Services GmbH

EN Applications of vehicles

DE Fahrzeugverwendungen

ES Aplicaciones

FR Applications

IT Applicazioni autoveicoli

12/2021

© 2022 Continental Aftermarket & Services GmbH

	kW				! #			
ABARTH - PUNTO 03/12→								
Brake Caliper								
1.4	120	03/12→				**24.3367-1717.5**	**241405**	BOS without holder
1.4 SUPERSPORT	132	03/12→				**24.3367-1718.5**	**241406**	BOS without holder
ABARTH - PUNTO EVO 07/08→02/12								
Brake Caliper								
1.4	120 - 132	07/08→02/12				**24.3367-1717.5**	**241405**	BOS without holder
						24.3367-1718.5	**241406**	BOS without holder
ALFA ROMEO - 159 (939_) 06/05→12/12								
Guide Bolt, brake caliper								
1.8 MPI	103	06/05→11/11		→ 10/11	2	**11.8171-0008.1**	**990049**	ATE
1.9 JTS	118	09/05→11/11						
2.2 JTS	136	09/05→11/11						
ALFA ROMEO - 159 Sportwagon (939_) 06/05→12/12								
Guide Bolt, brake caliper								
1.8 MPI	103	06/05→11/11		→ 10/11	2	**11.8171-0008.1**	**990049**	ATE
1.9 JTS	118	03/06→11/11						
2.2 JTS	136	03/06→11/11						
ALFA ROMEO - BRERA (939_) 01/06→05/11								
Guide Bolt, brake caliper								
2.2 JTS	136	01/06→05/11		for vehicles without sports suspension	2	**11.8171-0008.1**	**990049**	ATE
ALFA ROMEO - GIULIETTA (940_) 04/10→12/20								
Guide Bolt, brake caliper								
1.4 BiFuel	88	12/11→02/17			2	**11.8171-0008.1**	**990049**	ATE
1.4 TB	110 - 125	04/10→10/18						
1.6 JTDM	77 - 88	04/10→12/20						
2.0 JTDM	100 - 129	04/10→12/20						
1.4 TB	85 - 88	04/10→12/20		not for vehicles with reinforced brakes	2	**11.8171-0008.1**	**990049**	ATE
ALFA ROMEO - GIULIETTA Hatchback Van (940_) 04/11→12/20								
Guide Bolt, brake caliper								
1.4	88	04/11→02/16		not for vehicles with reinforced brakes	2	**11.8171-0008.1**	**990049**	ATE
1.6 JTDM	77	04/11→02/16			2	**11.8171-0008.1**	**990049**	ATE
2.0 JTDM	103 - 129	04/11→12/20						
ALFA ROMEO - SPIDER (939_) 03/06→03/11								
Guide Bolt, brake caliper								
2.2 JTS	136	03/06→03/11		04/06→ 02/08	2	**11.8171-0008.1**	**990049**	ATE
AUDI - 80 B3 Saloon (893, 894, 8A2) 06/86→10/91								
Guide Bolt, brake caliper								
1.6	51 - 55	09/86→09/91		08/89→ 07/91; Manual Transmission	2	**11.8171-0008.1**	**990049**	ATE
				08/89→ 07/91; Automatic Transmission	2	**11.8171-0008.1**	**990049**	ATE
				→ 07/89	2	**11.8171-0008.1**	**990049**	ATE
1.6	75	08/90→10/91		Manual Transmission	2	**11.8171-0008.1**	**990049**	ATE
1.8	55	10/86→01/90		Automatic Transmission	2	**11.8171-0008.1**	**990049**	ATE
1.6 D	40	02/87→07/89			2	**11.8171-0008.1**	**990049**	ATE
1.8 E quattro	82	09/86→08/91						
1.8 quattro	83	09/86→08/90						
1.8 S quattro	65 - 66	09/86→09/91						
2.0 E	83	08/88→10/90						
2.0 E 16V quattro	101	03/90→08/91						
2.0 E quattro	83	08/88→09/90						
2.0 quattro	82 - 85	08/88→08/91						
1.6 TD	59	09/86→08/91		04/88→ 07/91; for taxis	2	**11.8171-0008.1**	**990049**	ATE
				08/89→ 07/91; Automatic Transmission	2	**11.8171-0008.1**	**990049**	ATE
				08/89→ 07/91; not for taxis; Manual Transmission	2	**11.8171-0008.1**	**990049**	ATE

© 2022 Continental Aftermarket & Services GmbH

	kW				! #			
AUDI - 80 B3 Saloon (893, 894, 8A2) 06/86→10/91								
Guide Bolt, brake caliper								
1.6 TD	59	09/86→08/91	←	04/88→ 07/89; not for taxis	2	**11.8171-0008.1**	**990049**	ATE
1.8 E	82	06/86→08/91	←	09/86→ 07/91	2	**11.8171-0008.1**	**990049**	ATE
1.8 S	66	09/86→10/91	←	→ 07/91; Manual Transmission	2	**11.8171-0008.1**	**990049**	ATE
			←	→ 07/91; Automatic Transmission	2	**11.8171-0008.1**	**990049**	ATE
1.9 D 2.0 2.0 E 16V	50 82 101	08/89→08/91 10/90→08/91 03/90→09/91	←	→ 07/91	2	**11.8171-0008.1**	**990049**	ATE
AUDI - 90 B3 (893, 894, 8A2) 04/87→09/91								
Guide Bolt, brake caliper								
1.6 TD	59	04/87→09/91	←	04/88→ 07/91	2	**11.8171-0008.1**	**990049**	ATE
2.0	85	07/88→09/91	←	→ 07/91	2	**11.8171-0008.1**	**990049**	ATE
2.0 20 V quattro 2.0 quattro 2.2 E 2.2 E quattro 2.3 E 2.3 E quattro	118 101 100 100 100 100	08/88→09/91 08/89→07/90 04/87→07/91 04/87→09/91 04/87→07/91 04/87→07/91	←		2	**11.8171-0008.1**	**990049**	ATE
AUDI - 100 C3 Avant (445, 446) 08/82→11/90								
Guide Bolt, brake caliper								
1.8	55 - 66	08/82→07/90	←	44-H-073661→	2	**11.8171-0008.1**	**990049**	ATE
1.8 Cat 2.0 2.0 E 2.0 E Cat 2.0 TD 2.2	66 83 85 85 74 85	03/85→11/90 09/86→11/87 01/85→12/87 01/88→11/90 03/88→11/90 10/84→09/86	←	→ 44-H-073660	2	**11.8171-0008.1**	**990049**	ATE
1.9 2.4 D	74 60	02/83→07/84 08/89→11/90	←		2	**11.8171-0008.1**	**990049**	ATE
2.0 D	51	03/83→11/90	←	→ 07/84	2	**11.8171-0008.1**	**990049**	ATE
			←	08/84→; → 44-H-073660	2	**11.8171-0008.1**	**990049**	ATE
			←	44-H-073661→; → 07/89	2	**11.8171-0008.1**	**990049**	ATE
2.0 TD	64	03/83→10/87	←	→ 07/84	2	**11.8171-0008.1**	**990049**	ATE
2.1	96 - 100	08/82→07/84	←	44-H-073661→; Rim Hole Number: 4	2	**11.8171-0008.1**	**990049**	ATE
2.2 2.2 Cat 2.3	101 101 98 - 100	08/84→12/88 06/89→11/90 08/86→11/90	←	→ 44-H-073660	2	**11.8171-0008.1**	**990049**	ATE
AUDI - 100 C3 Saloon (443, 444) 08/82→07/91								
Guide Bolt, brake caliper								
1.8	55 - 66	08/82→07/89	←	44-H-073661→	2	**11.8171-0008.1**	**990049**	ATE
1.8 Cat 2.0 2.0 Cat 2.0 D Turbo 2.2	66 83 - 85 85 74 85	03/85→11/90 08/84→12/87 01/88→11/90 03/88→11/90 10/84→09/86	←	→ 44-H-073660	2	**11.8171-0008.1**	**990049**	ATE
1.9	74	08/82→07/84	←		2	**11.8171-0008.1**	**990049**	ATE
2.0 D	51	08/82→07/88	←	→ 07/84	2	**11.8171-0008.1**	**990049**	ATE
			←	08/84→; → 44-H-073660	2	**11.8171-0008.1**	**990049**	ATE
			←	44-H-073661→	2	**11.8171-0008.1**	**990049**	ATE
2.0 D Turbo	64	08/82→02/88	←	→ 07/84	2	**11.8171-0008.1**	**990049**	ATE
2.1	100	08/82→07/84	←	44-H-073661→; Rim Hole Number: 4	2	**11.8171-0008.1**	**990049**	ATE
2.2 2.2 Cat 2.3 E	79 - 101 101 98 - 100	08/82→12/88 06/89→11/90 10/86→11/90	←	→ 44-H-073660	2	**11.8171-0008.1**	**990049**	ATE
2.4 D	60	08/89→07/91	←	→ 12/90	2	**11.8171-0008.1**	**990049**	ATE
AUDI - 100 C4 Avant (4A5) 12/90→11/94								
Guide Bolt, brake caliper								
2.0 E 2.0 E 16V 2.0 E 16V quattro	74 - 85 103 103	09/91→07/94 07/92→07/94 07/92→07/94	←		2	**11.8171-0008.1**	**990049**	ATE

© 2022 Continental Aftermarket & Services GmbH

	kW				! #			
AUDI - 100 C4 Avant (4A5) 12/90→11/94								
Guide Bolt, brake caliper								
2.0 E quattro 2.3 E 2.3 E quattro 2.6 2.6 E quattro 2.6 quattro 2.8 E 2.8 E quattro	85 98 98 102 102 110 128 128	12/90→07/92 09/91→07/94 09/91→07/94 07/93→07/94 08/93→07/94 07/92→07/94 09/91→07/94 09/91→07/94	←		2	**11.8171-0008.1**	**990049**	ATE
2.4 D	60	12/90→07/94	←	05/91→	2	**11.8171-0008.1**	**990049**	ATE
2.5 TDI	85	12/90→07/94	←	06/91→	2	**11.8171-0008.1**	**990049**	ATE
2.6	110	03/92→07/94	←	04/92→	2	**11.8171-0008.1**	**990049**	ATE
AUDI - 100 C4 Saloon (4A2) 12/90→07/94								
Guide Bolt, brake caliper								
2.0 2.0 E 2.0 E 16V 2.0 E 16V quattro 2.0 E quattro 2.3 E 2.3 E quattro 2.6 2.6 quattro 2.8 E 2.8 E quattro	74 85 103 103 85 98 98 102 110 128 128	12/90→07/94 12/90→07/94 01/92→07/94 07/92→07/94 12/90→07/92 12/90→07/94 12/90→07/94 07/93→07/94 04/92→07/94 12/90→07/94 12/90→07/94	←		2	**11.8171-0008.1**	**990049**	ATE
2.4 D	60	12/90→07/94	←	05/91→	2	**11.8171-0008.1**	**990049**	ATE
2.5 TDI	85	12/90→07/94	←	06/91→	2	**11.8171-0008.1**	**990049**	ATE
2.6	110	03/92→07/94	←	04/92→	2	**11.8171-0008.1**	**990049**	ATE
AUDI - A1 (8X1, 8XK) 05/10→10/18								
Guide Bolt, brake caliper								
1.0 TFSI S1 quattro	60 170	01/16→10/18 03/14→10/18		+PR 1ZC	2	**11.8171-0008.1**	**990049**	ATE
				+PR 1ZS	2	**11.8171-0008.1**	**990049**	ATE
				+PR 1ZM	2	**11.8171-0008.1**	**990049**	ATE
				+PR 1ZN	2	**11.8171-0008.1**	**990049**	ATE
1.0 TFSI 1.4 TDI 1.4 TFSI 1.6 TDI 1.8 TFSI	70 66 92 85 141	03/15→10/18 11/14→10/18 11/14→10/18 11/14→10/18 02/15→10/18		+PR 1ZG	2	**11.8171-0008.1**	**990049**	ATE
				+PR 1ZC	2	**11.8171-0008.1**	**990049**	ATE
				+PR 1ZS	2	**11.8171-0008.1**	**990049**	ATE
				+PR 1ZM	2	**11.8171-0008.1**	**990049**	ATE
				+PR 1ZN	2	**11.8171-0008.1**	**990049**	ATE
1.2 TFSI 1.4 TFSI 1.6 TDI 2.0 TDI	63 90 - 136 66 - 77 100 - 105	05/10→04/15 05/10→04/15 05/10→04/15 09/11→04/15		+PR 1ZG	2	**11.8171-0008.1**	**990049**	ATE
				+PR 1ZC	2	**11.8171-0008.1**	**990049**	ATE
				+PR 1LJ	2	**11.8171-0008.1**	**990049**	ATE
				+PR 1ZS	2	**11.8171-0008.1**	**990049**	ATE
				+PR 1ZM	2	**11.8171-0008.1**	**990049**	ATE
				+PR 1ZN	2	**11.8171-0008.1**	**990049**	ATE
1.4 TSI	110	11/14→10/18		+PR 1ZG	2	**11.8171-0008.1**	**990049**	ATE
				+PR 1ZC	2	**11.8171-0008.1**	**990049**	ATE
2.0 TFSI quattro	188	03/12→11/12		10/12→; +PR 1ZG	2	**11.8171-0008.1**	**990049**	ATE
				10/12→; +PR 1ZC	2	**11.8171-0008.1**	**990049**	ATE
				10/12→; +PR 1LJ	2	**11.8171-0008.1**	**990049**	ATE
				10/12→; +PR 1ZS	2	**11.8171-0008.1**	**990049**	ATE
				10/12→; +PR 1ZM	2	**11.8171-0008.1**	**990049**	ATE
				10/12→; +PR 1ZN	2	**11.8171-0008.1**	**990049**	ATE
Brake Disc								
1.0 TFSI 1.8 TFSI	60 - 70 141	03/15→10/18 02/15→10/18	→	+PR 1KT		**24.0109-0123.1**	**409123**	Ø 230 Brake Disc Thickness [mm] 9 Minimum thickness [mm] 7 + S
1.2 TFSI 1.4 TFSI 1.6 TDI 2.0 TDI	63 90 - 136 66 - 77 100 - 105	05/10→04/15 05/10→04/15 05/10→04/15 09/11→04/15	←	+PR 1LJ		**24.0125-0158.1** **24.0325-0158.1**	**425158** **525158**	Ø 312 Brake Disc Thickness [mm] 25 Minimum thickness [mm] 22 Vented + S Ø 312 Brake Disc Thickness [mm] 25 Minimum thickness [mm] 22 Vented + S

© 2022 Continental Aftermarket & Services GmbH

	kW				! #			
AUDI - A1 (8X1, 8XK) 05/10→10/18								
Brake Disc								
1.2 TFSI 1.4 TFSI	63 90 - 136	05/10→04/15 05/10→04/15	→	+PR 1KT		**24.0109-0123.1**	**409123**	Ø 230 Brake Disc Thickness [mm] 9 Minimum thickness [mm] 7 + S
1.6 TDI 2.0 TDI	66 - 77 100 - 105	05/10→04/15 09/11→04/15	→	+PR 1KS		**24.0110-0356.1**	**410356**	Ø 272 Brake Disc Thickness [mm] 9.7 Minimum thickness [mm] 8 + S
1.4 TDI 1.4 TFSI 1.4 TSI	66 92 110	11/14→10/18 11/14→10/18 11/14→10/18	→	+PR 1KT		**24.0109-0123.1**	**409123**	Ø 230 Brake Disc Thickness [mm] 9 Minimum thickness [mm] 7 + S
1.6 TDI	85	11/14→10/18	→	+PR 1KS		**24.0110-0356.1**	**410356**	Ø 272 Brake Disc Thickness [mm] 9.7 Minimum thickness [mm] 8 + S
2.0 TFSI quattro	188	03/12→11/12	←	10/12→; +PR 1LJ		**24.0125-0158.1** **24.0325-0158.1**	**425158** **525158**	Ø 312 Brake Disc Thickness [mm] 25 Minimum thickness [mm] 22 Vented + S Ø 312 Brake Disc Thickness [mm] 25 Minimum thickness [mm] 22 Vented + S
			→	10/12→; +PR 1KT		**24.0109-0123.1**	**409123**	Ø 230 Brake Disc Thickness [mm] 9 Minimum thickness [mm] 7 + S
			→	10/12→; +PR 1KS		**24.0110-0356.1**	**410356**	Ø 272 Brake Disc Thickness [mm] 9.7 Minimum thickness [mm] 8 + S
Sensor, wheel speed								
1.0 TFSI	60 - 70	03/15→10/18	←			**24.0711-5273.3**	**360303**	
1.2 TFSI 1.4 TDI 1.4 TFSI 1.4 TSI 1.6 TDI 1.8 TFSI 2.0 TDI S1 quattro	63 66 90 - 136 110 66 - 85 141 100 - 105 170	05/10→04/15 11/14→10/18 05/10→10/18 11/14→10/18 05/10→10/18 02/15→10/18 09/11→04/15 03/14→10/18	←			**24.0711-5274.3**	**360304**	
2.0 TFSI quattro	188	03/12→11/12	←	10/12→;		**24.0711-5273.3**	**360303**	
			←	10/12→;		**24.0711-5274.3**	**360304**	
Slave Cylinder, clutch								
1.0 TFSI	60 - 70	03/15→10/18		+PR 0EM		**24.2519-1706.3**	**040096**	Ø 19
1.2 TFSI 1.4 TFSI	63 90 - 136	05/10→04/15 05/10→04/15						
1.6 TDI	66 - 77	05/10→04/15						
2.0 TDI	100 - 105	09/11→04/15						
S1 quattro	170	03/14→10/18						
2.0 TFSI quattro	188	03/12→11/12		10/12→; +PR 0EM		**24.2519-1706.3**	**040096**	Ø 19
AUDI - A1 CITY CARVER (GBH) 07/19→								
Brake Pad Set, disc brake								
25 TFSI 30 TFSI	70 81 - 85	07/19→ 07/19→	←	+PR 1ZA / 1ZK		**13.0470-2609.2**	**LD2609**	TRW + WE / - WK Ceramic
35 TFSI	110	07/19→						
Brake Disc								
25 TFSI 30 TFSI	70 81 - 85	07/19→ 07/19→	←	+PR 1ZG		**24.0122-0312.1**	**422312**	Ø 256 Brake Disc Thickness [mm] 22 Minimum thickness [mm] 19 Vented + S
35 TFSI	110	07/19→						
			←	+PR 1ZE / 1ZM / 1ZQ / 1ZR / 1ZS		**24.0124-0263.1**	**424263**	Ø 275.7 Brake Disc Thickness [mm] 24 Minimum thickness [mm] 21 Vented + S
			→	+PR 1KD / 1KV		**24.0109-0123.1**	**409123**	Ø 230 Brake Disc Thickness [mm] 9 Minimum thickness [mm] 7 + S

	kW				! #			
AUDI - A1 CITY CARVER (GBH) 07/19→								
Sensor, wheel speed								
25 TFSI	70	07/19→	←	→ 11/19;		**24.0711-5273.3**	**360303**	
30 TFSI	85	07/19→						
35 TFSI	110	07/19→	←	→ 11/19;		**24.0711-5274.3**	**360304**	
Wheel Brake Cylinder								
25 TFSI	70	07/19→	→	+PR 1KA	2	**24.3220-1757.3**	**020605**	ALU
30 TFSI	81 - 85	07/19→						
35 TFSI	110	07/19→						
Accessory Kit, brake shoes								
25 TFSI	70	07/19→	→	+PR 1KA		**03.0137-9309.2**	**669309**	AP
30 TFSI	81 - 85	07/19→						
35 TFSI	110	07/19→						
Brake Shoe Set								
25 TFSI	70	07/19→	→	+PR 1KA		**03.0137-0540.2**	**650540**	Ø 228 Width [mm] 42 + HEB
30 TFSI	81 - 85	07/19→						
35 TFSI	110	07/19→						
AUDI - A1 Sportback (8XA, 8XF) 09/11→10/18								
Guide Bolt, brake caliper								
1.0 TFSI	60	01/16→10/18		+PR 1ZC	2	**11.8171-0008.1**	**990049**	ATE
S1 quattro	170	03/14→10/18		+PR 1ZS	2	**11.8171-0008.1**	**990049**	ATE
				+PR 1ZM	2	**11.8171-0008.1**	**990049**	ATE
				+PR 1ZN	2	**11.8171-0008.1**	**990049**	ATE
1.0 TFSI	70	03/15→10/18		+PR 1ZG	2	**11.8171-0008.1**	**990049**	ATE
1.4 TDI	66	11/14→10/18		+PR 1ZC	2	**11.8171-0008.1**	**990049**	ATE
1.4 TFSI	92	11/14→10/18		+PR 1ZS	2	**11.8171-0008.1**	**990049**	ATE
1.4 TSI	110	11/14→10/18		+PR 1ZM	2	**11.8171-0008.1**	**990049**	ATE
1.6 TDI	85	11/14→10/18		+PR 1ZN	2	**11.8171-0008.1**	**990049**	ATE
1.8 TFSI	141	02/15→10/18						
1.2 TFSI	63	01/12→04/15		+PR 1ZG	2	**11.8171-0008.1**	**990049**	ATE
1.4 TFSI	90 - 136	11/11→04/15		+PR 1ZC	2	**11.8171-0008.1**	**990049**	ATE
1.6 TDI	66 - 77	11/11→04/15		+PR 1LJ	2	**11.8171-0008.1**	**990049**	ATE
2.0 TDI	100 - 105	09/11→04/15		+PR 1ZS	2	**11.8171-0008.1**	**990049**	ATE
				+PR 1ZM	2	**11.8171-0008.1**	**990049**	ATE
				+PR 1ZN	2	**11.8171-0008.1**	**990049**	ATE
Brake Disc								
1.0 TFSI	60 - 70	03/15→10/18	→	+PR 1KT		**24.0109-0123.1**	**409123**	Ø 230 Brake Disc Thickness [mm] 9 Minimum thickness [mm] 7 + S
1.8 TFSI	141	02/15→10/18						
1.2 TFSI	63	01/12→04/15	←	+PR 1LJ		**24.0125-0158.1**	**425158**	Ø 312 Brake Disc Thickness [mm] 25 Minimum thickness [mm] 22 Vented + S
1.4 TFSI	90 - 136	11/11→04/15						
1.6 TDI	66 - 77	11/11→04/15						
2.0 TDI	100 - 105	09/11→04/15				**24.0325-0158.1**	**525158**	Ø 312 Brake Disc Thickness [mm] 25 Minimum thickness [mm] 22 Vented + S
			→	+PR 1KT		**24.0109-0123.1**	**409123**	Ø 230 Brake Disc Thickness [mm] 9 Minimum thickness [mm] 7 + S
			→	+PR 1KS		**24.0110-0356.1**	**410356**	Ø 272 Brake Disc Thickness [mm] 9.7 Minimum thickness [mm] 8 + S
1.4 TDI	66	11/14→10/18	→	+PR 1KT		**24.0109-0123.1**	**409123**	Ø 230 Brake Disc Thickness [mm] 9 Minimum thickness [mm] 7 + S
1.4 TFSI	92	11/14→10/18						
1.4 TSI	110	11/14→10/18						
1.6 TDI	85	11/14→10/18	→	+PR 1KS		**24.0110-0356.1**	**410356**	Ø 272 Brake Disc Thickness [mm] 9.7 Minimum thickness [mm] 8 + S
Sensor, wheel speed								
1.0 TFSI	60 - 70	03/15→10/18	←			**24.0711-5273.3**	**360303**	
1.2 TFSI	63	01/12→04/15	←			**24.0711-5274.3**	**360304**	
1.4 TDI	66	11/14→10/18						
1.4 TFSI	90 - 136	11/11→10/18						

© 2022 Continental Aftermarket & Services GmbH

	kW				! #			
AUDI - A1 Sportback (8XA, 8XF) 09/11→10/18								
Sensor, wheel speed								
1.4 TSI 1.6 TDI 1.8 TFSI 2.0 TDI S1 quattro	110 66 - 85 141 100 - 105 170	11/14→10/18 11/11→10/18 02/15→10/18 09/11→04/15 03/14→10/18	←	⊞		**24.0711-5273.3**	**360303**	
			←	⊞		**24.0711-5274.3**	**360304**	
Slave Cylinder, clutch								
1.0 TFSI 1.2 TFSI 1.4 TFSI 1.6 TDI 2.0 TDI S1 quattro	60 - 70 63 90 - 136 66 - 77 100 - 105 170	03/15→10/18 01/12→04/15 11/11→04/15 11/11→04/15 09/11→04/15 03/14→10/18		+PR 0EM		**24.2519-1706.3**	**040096**	Ø 19
AUDI - A1 Sportback (GBA) 07/18→								
Brake Pad Set, disc brake								
25 TFSI 30 TFSI 35 TFSI 40 TFSI	70 81 - 85 110 147 - 152	11/18→ 07/18→ 09/18→ 09/18→	←	+PR 1ZA / 1ZK		**13.0470-2609.2**	**LD2609**	TRW + WE / - WK Ceramic
Brake Disc								
25 TFSI 30 TFSI 35 TFSI 40 TFSI	70 81 - 85 110 147 - 152	11/18→ 07/18→ 09/18→ 09/18→	←	+PR 1ZG		**24.0122-0312.1**	**422312**	Ø 256 Brake Disc Thickness [mm] 22 Minimum thickness [mm] 19 Vented + S
			←	+PR 1ZE / 1ZM / 1ZQ / 1ZR / 1ZS		**24.0124-0263.1**	**424263**	Ø 275.7 Brake Disc Thickness [mm] 24 Minimum thickness [mm] 21 Vented + S
			→	+PR 1KD / 1KV		**24.0109-0123.1**	**409123**	Ø 230 Brake Disc Thickness [mm] 9 Minimum thickness [mm] 7 + S
Sensor, wheel speed								
25 TFSI 30 TFSI 35 TFSI 40 TFSI	70 85 110 147	11/18→ 07/18→ 09/18→ 09/18→	←	→ 11/19; ⊞		**24.0711-5273.3**	**360303**	
			←	→ 11/19; ⊞		**24.0711-5274.3**	**360304**	
Wheel Brake Cylinder								
25 TFSI 30 TFSI 35 TFSI 40 TFSI	70 81 - 85 110 147 - 152	11/18→ 07/18→ 09/18→ 09/18→	→	+PR 1KA	2	**24.3220-1757.3**	**020605**	ALU
Accessory Kit, brake shoes								
25 TFSI 30 TFSI 35 TFSI 40 TFSI	70 81 - 85 110 147 - 152	11/18→ 07/18→ 09/18→ 09/18→	→	+PR 1KA		**03.0137-9309.2**	**669309**	AP
Brake Shoe Set								
25 TFSI 30 TFSI 35 TFSI 40 TFSI	70 81 - 85 110 147 - 152	11/18→ 07/18→ 09/18→ 09/18→	→	+PR 1KA		**03.0137-0540.2**	**650540**	Ø 228 Width [mm] 42 + HEB
AUDI - A2 (8Z0) 02/00→08/05								
Guide Bolt, brake caliper								
1.2 TDI	45	03/01→08/05		→ 07/05	2	**11.8171-0008.1**	**990049**	ATE

	kW				! #			
AUDI - A2 (8Z0) 02/00→08/05								
Brake Disc								
1.4 TDI 1.6 FSI	66 81	11/03→08/05 05/02→08/05	➡	→ 07/05		**24.0109-0123.1**	**409123**	Ø 230 Brake Disc Thickness [mm] 9 Minimum thickness [mm] 7 + S
Sensor, wheel speed								
1.4 1.4 TDI	55 55	02/00→08/05 02/00→08/05	⬅	06/00→ 07/05; ▚		**24.0711-5273.3**	**360303**	
			⬅	06/00→ 07/05; ▞		**24.0711-5274.3**	**360304**	
1.4 TDI 1.6 FSI	66 81	11/03→08/05 05/02→08/05	⬅	→ 07/05; ▚		**24.0711-5273.3**	**360303**	
			⬅	→ 07/05; ▞		**24.0711-5274.3**	**360304**	
Slave Cylinder, clutch								
1.4	55	02/00→08/05		06/00→; → 8Z-2-011846		**24.2519-1706.3**	**040096**	Ø 19
AUDI - A3 (8L1) 09/96→09/06								
Guide Bolt, brake caliper								
1.6 1.8 1.8 T	74 - 75 92 110	09/96→05/03 09/96→05/03 12/96→05/03		→ 8L-W-094814; +PR 1LQ / 1LR / 1LS	2	**11.8171-0008.1**	**990049**	ATE
				8L-W-094815→; +PR 1LQ / 1LR / 1LS / 1ZP	2	**11.8171-0008.1**	**990049**	ATE
				+PR 1LE / 1LN / 1ZD	2	**11.8171-0008.1**	**990049**	ATE
1.8 T 1.8 T quattro 1.9 TDI	132 132 74	12/98→05/03 10/98→05/03 10/00→05/03		+PR 1LE / 1LN / 1ZD	2	**11.8171-0008.1**	**990049**	ATE
				+PR 1LQ / 1LR / 1LS / 1ZP	2	**11.8171-0008.1**	**990049**	ATE
1.8 T quattro	110	12/96→05/03		08/98→; +PR 1LQ / 1LR / 1LS / 1ZP	2	**11.8171-0008.1**	**990049**	ATE
				08/98→; +PR 1LE / 1LN / 1ZD	2	**11.8171-0008.1**	**990049**	ATE
1.9 TDI	66 - 81	09/96→07/01		→ 8L-W-094814; +PR 1LQ / 1LR / 1LS	2	**11.8171-0008.1**	**990049**	ATE
				→ 06/01; +PR 1LE / 1LN / 1ZD	2	**11.8171-0008.1**	**990049**	ATE
				8L-W-094815→; → 06/01; +PR 1LQ / 1LR / 1LS / 1ZP	2	**11.8171-0008.1**	**990049**	ATE
1.9 TDI 1.9 TDI quattro	96 96	08/00→05/03 08/00→05/03		09/00→; +PR 1LQ / 1LR / 1LS / 1ZP	2	**11.8171-0008.1**	**990049**	ATE
				09/00→; +PR 1LE / 1LN / 1ZD	2	**11.8171-0008.1**	**990049**	ATE
S3 quattro	154 - 165	03/99→05/03		+PR 1LE / 1LN / 1ZD	2	**11.8171-0008.1**	**990049**	ATE
				+PR 1LQ / 1LR / 1LS / 1ZP	2	**11.8171-0008.1**	**990049**	ATE
				+PR 1LT	2	**11.8171-0008.1**	**990049**	ATE
Brake Disc								
1.6 1.8 1.8 T 1.9 TDI	74 - 75 92 110 - 132 74	09/96→05/03 09/96→05/03 12/96→05/03 10/00→05/03	➡	+PR 1KK / 1KV		**24.0109-0123.1**	**409123**	Ø 230 Brake Disc Thickness [mm] 9 Minimum thickness [mm] 7 + S
1.9 TDI	66 - 81	09/96→07/01	➡	→ 06/01; +PR 1KK / 1KV		**24.0109-0123.1**	**409123**	Ø 230 Brake Disc Thickness [mm] 9 Minimum thickness [mm] 7 + S
1.9 TDI	96	08/00→05/03	➡	09/00→; +PR 1KK / 1KV		**24.0109-0123.1**	**409123**	Ø 230 Brake Disc Thickness [mm] 9 Minimum thickness [mm] 7 + S
AUDI - A3 (8P1) 05/03→12/13								
Guide Bolt, brake caliper								
1.2 TSI 1.4 TFSI 1.6 1.6 E-Power 1.6 FSI 1.6 TDI 1.8 TFSI quattro 2.0 FSI 2.0 TDI 2.0 TDI 16V 2.0 TDI 16V quattro 2.0 TDI quattro 2.0 TFSI 2.0 TFSI quattro 3.2 V6 quattro	77 92 75 75 85 66 - 77 118 110 100 - 125 103 103 100 - 125 147 147 184	04/10→08/12 09/07→08/12 05/03→08/12 01/11→08/12 08/03→09/07 05/09→08/12 07/08→08/12 05/03→06/08 05/03→08/12 05/03→08/12 08/04→08/12 05/03→08/12 09/04→08/12 09/04→08/12 07/03→05/09		+PR 1ZE / 1ZP	2	**11.8171-0008.1**	**990049**	ATE
				+PR 1ZD / 1LJ / 1ZA	2	**11.8171-0008.1**	**990049**	ATE
				+PR 1LK	2	**11.8171-0008.1**	**990049**	ATE
1.8 T 1.8 TFSI	110 118	08/06→08/12 11/06→08/12		01/07→; +PR 1ZE / 1ZP	2	**11.8171-0008.1**	**990049**	ATE
				01/07→; +PR 1ZD / 1LJ / 1ZA	2	**11.8171-0008.1**	**990049**	ATE
				01/07→; +PR 1LK	2	**11.8171-0008.1**	**990049**	ATE

© 2022 Continental Aftermarket & Services GmbH

	kW				! #			
AUDI - A3 (8P1) 05/03→12/13								
Guide Bolt, brake caliper								
1.9 TDI	77	05/03→05/10		06/03→; +PR 1ZE / 1ZP	2	**11.8171-0008.1**	**990049**	ATE
				06/03→; +PR 1ZD / 1LJ / 1ZA	2	**11.8171-0008.1**	**990049**	ATE
				06/03→; +PR 1LK	2	**11.8171-0008.1**	**990049**	ATE
S3 quattro	188	02/07→08/12		07/08→; +PR 1ZK	2	**11.8171-0008.1**	**990049**	ATE
S3 quattro	195	11/06→08/12		+PR 1ZK	2	**11.8171-0008.1**	**990049**	ATE
Brake Disc								
1.2 TSI 1.4 TFSI 1.6 1.6 E-Power 1.6 FSI 1.6 TDI 1.8 TFSI quattro 2.0 FSI 2.0 TDI 2.0 TDI 16V 2.0 TDI 16V quattro 2.0 TDI quattro 2.0 TFSI 2.0 TFSI quattro	77 92 75 75 85 66 - 77 118 110 100 - 125 103 103 100 - 125 147 147	04/10→08/12 09/07→08/12 05/03→08/12 01/11→08/12 08/03→09/07 05/09→08/12 07/08→08/12 05/03→06/08 05/03→08/12 05/03→08/12 08/04→08/12 05/03→08/12 09/04→08/12 09/04→08/12	←	+PR 1ZE / 1ZP		**24.0125-0145.1**	**425145**	Ø 288 Brake Disc Thickness [mm] 25 Minimum thickness [mm] 22 Vented + S
			←	+PR 1ZD / 1LJ / 1ZA		**24.0125-0158.1**	**425158**	Ø 312 Brake Disc Thickness [mm] 25 Minimum thickness [mm] 22 Vented + S
						24.0325-0158.1	**525158**	Ø 312 Brake Disc Thickness [mm] 25 Minimum thickness [mm] 22 Vented + S
			→	+PR 1KS		**24.0110-0356.1**	**410356**	Ø 272 Brake Disc Thickness [mm] 9.7 Minimum thickness [mm] 8 + S
1.8 T	110	08/06→08/12	←	01/07→; +PR 1ZE / 1ZP		**24.0125-0145.1**	**425145**	Ø 288 Brake Disc Thickness [mm] 25 Minimum thickness [mm] 22 Vented + S
			←	01/07→; +PR 1ZD / 1LJ / 1ZA		**24.0125-0158.1**	**425158**	Ø 312 Brake Disc Thickness [mm] 25 Minimum thickness [mm] 22 Vented + S
			→	01/07→; +PR 1KS		**24.0110-0356.1**	**410356**	Ø 272 Brake Disc Thickness [mm] 9.7 Minimum thickness [mm] 8 + S
1.8 TFSI	118	11/06→08/12	←	01/07→; +PR 1ZE / 1ZP		**24.0125-0145.1**	**425145**	Ø 288 Brake Disc Thickness [mm] 25 Minimum thickness [mm] 22 Vented + S
			←	01/07→; +PR 1ZD / 1LJ / 1ZA		**24.0125-0158.1**	**425158**	Ø 312 Brake Disc Thickness [mm] 25 Minimum thickness [mm] 22 Vented + S
						24.0325-0158.1	**525158**	Ø 312 Brake Disc Thickness [mm] 25 Minimum thickness [mm] 22 Vented + S
			→	01/07→; +PR 1KS		**24.0110-0356.1**	**410356**	Ø 272 Brake Disc Thickness [mm] 9.7 Minimum thickness [mm] 8 + S
1.9 TDI	77	05/03→05/10	←	06/03→; +PR 1ZE / 1ZP		**24.0125-0145.1**	**425145**	Ø 288 Brake Disc Thickness [mm] 25 Minimum thickness [mm] 22 Vented + S
			←	06/03→; +PR 1ZD / 1LJ / 1ZA		**24.0125-0158.1**	**425158**	Ø 312 Brake Disc Thickness [mm] 25 Minimum thickness [mm] 22 Vented + S
						24.0325-0158.1	**525158**	Ø 312 Brake Disc Thickness [mm] 25 Minimum thickness [mm] 22 Vented + S
			→	06/03→; +PR 1KS		**24.0110-0356.1**	**410356**	Ø 272 Brake Disc Thickness [mm] 9.7 Minimum thickness [mm] 8 + S
3.2 V6 quattro	184	07/03→05/09	←	+PR 1ZE / 1ZP		**24.0125-0145.1**	**425145**	Ø 288 Brake Disc Thickness [mm] 25 Minimum thickness [mm] 22 Vented + S
			←	+PR 1ZD / 1LJ / 1ZA		**24.0125-0158.1**	**425158**	Ø 312 Brake Disc Thickness [mm] 25 Minimum thickness [mm] 22 Vented + S
						24.0325-0158.1	**525158**	Ø 312 Brake Disc Thickness [mm] 25 Minimum thickness [mm] 22 Vented + S

	kW				! #			
AUDI - A3 (8P1) 05/03→12/13								
Brake Disc								
3.2 V6 quattro	184	07/03→05/09		+PR 1KS		**24.0110-0356.1**	**410356**	Ø 272 Brake Disc Thickness [mm] 9.7 Minimum thickness [mm] 8 + S
				+PR 2EA		**24.0122-0219.1**	**422219**	Ø 310 Brake Disc Thickness [mm] 22 Minimum thickness [mm] 20 Vented
S3 quattro	188	02/07→08/12		07/08→; +PR 1KW		**24.0122-0219.1**	**422219**	Ø 310 Brake Disc Thickness [mm] 22 Minimum thickness [mm] 20 Vented
S3 quattro	195	11/06→08/12		+PR 1KW		**24.0122-0219.1**	**422219**	Ø 310 Brake Disc Thickness [mm] 22 Minimum thickness [mm] 20 Vented
Slave Cylinder, clutch								
1.2 TSI 1.4 TFSI 1.6 1.6 E-Power 1.6 FSI 1.6 TDI 1.8 TFSI quattro 2.0 FSI 2.0 TDI 2.0 TDI 16V 2.0 TDI 16V quattro 2.0 TDI quattro 2.0 TFSI 2.0 TFSI quattro 3.2 V6 quattro S3 quattro	77 92 75 75 85 66 - 77 118 110 100 - 125 103 103 100 - 125 147 147 184 195	04/10→08/12 09/07→08/12 05/03→08/12 01/11→08/12 08/03→09/07 05/09→08/12 07/08→08/12 05/03→06/08 05/03→08/12 05/03→08/12 08/04→08/12 05/03→08/12 09/04→08/12 09/04→08/12 07/03→05/09 11/06→08/12		6-Speed Manual Transmission		**24.2519-1706.3**	**040096**	Ø 19
1.8 T 1.8 TFSI	110 118	08/06→08/12 11/06→08/12		01/07→; 6-Speed Manual Transmission		**24.2519-1706.3**	**040096**	Ø 19
1.9 TDI	77	05/03→05/10		06/03→; 6-Speed Manual Transmission		**24.2519-1706.3**	**040096**	Ø 19
S3 quattro	188	02/07→08/12		07/08→; 6-Speed Manual Transmission		**24.2519-1706.3**	**040096**	Ø 19
AUDI - A3 (8V1, 8VK) 04/12→10/20								
Brake Master Cylinder								
1.0 TFSI 1.2 TFSI 1.4 TFSI 1.4 TSI 1.5 TFSI 1.6 TDI 1.8 TFSI 1.8 TFSI quattro 2.0 TDI 2.0 TDI quattro 2.0 TFSI 2.0 TFSI quattro S3 quattro	85 77 - 81 90 - 103 110 110 77 - 85 132 132 81 - 135 110 - 135 140 140 206 - 228	07/16→12/17 02/13→08/16 04/12→08/16 05/14→12/17 05/17→12/17 10/12→10/20 04/12→08/16 08/12→08/16 04/12→10/20 10/12→12/17 05/16→12/17 05/16→12/17 11/12→12/17		for left-hand drive vehicles		**24.4123-1719.3**	**011017**	TRW Ø 23.8 without brake fluid reservoir
Brake Caliper								
1.0 TFSI 1.2 TFSI	85 77 - 81	07/16→12/17 02/13→08/16		+PR 1ZA / 1ZD;		**24.3571-1801.5**	**241387**	without holder
				+PR 1ZA / 1ZD;		**24.3571-1802.5**	**241388**	without holder
1.4 TFSI	90 - 103	04/12→08/16		+PR 1LB;		**24.3601-1727.5**	**240786**	TRW without holder
1.4 TSI 1.5 TFSI 1.6 TDI	110 110 77 - 85	05/14→12/17 05/17→12/17 10/12→10/20		+PR 1LB;		**24.3601-1728.5**	**240787**	TRW without holder
				+PR 1KE / 1KR; + eFSB;		**24.6238-7023.5** **24.6238-7047.5**	**241241** **241181**	ATE without holder + eFSB ATE without holder + eFSB
1.8 TFSI 1.8 TFSI quattro 2.0 TDI	132 132 81 - 135	04/12→08/16 08/12→08/16 04/12→10/20		+PR 1KE / 1KR; + eFSB;		**24.6238-7024.5** **24.6238-7048.5**	**241242** **241182**	ATE without holder + eFSB ATE without holder + eFSB
2.0 TDI quattro	110 - 135	10/12→12/17		+PR 1KZ;		**24.6242-7001.5**	**241335**	ATE + EMot / without holder + eFSB
2.0 TFSI	140	05/16→12/17						

© 2022 Continental Aftermarket & Services GmbH

AUDI - A3 (8V1, 8VK) 04/12→10/20

Brake Caliper

	kW				! #			
2.0 TFSI quattro S3 quattro	140 206 - 228	05/16→12/17 11/12→12/17	➡	+PR 1KZ;		**24.6242-7002.5**	**241336**	ATE + EMot / without holder + eFSB
			➡	+PR 1KJ; + eFSB;		**24.6242-7017.5**	**241185**	ATE without holder + eFSB
			➡	+PR 1KJ; + eFSB;		**24.6242-7018.5**	**241186**	ATE without holder + eFSB

Guide Bolt, brake caliper

1.0 TFSI 1.2 TFSI 1.4 TFSI 1.4 TSI 1.5 TFSI 1.6 TDI 1.8 TFSI 1.8 TFSI quattro 2.0 TDI 2.0 TDI quattro 2.0 TFSI 2.0 TFSI quattro S3 quattro	85 77 - 81 90 - 103 110 110 77 - 85 132 132 81 - 135 110 - 135 140 140 206 - 228	07/16→12/17 02/13→08/16 04/12→08/16 05/14→12/17 05/17→12/17 10/12→10/20 04/12→08/16 08/12→08/16 04/12→10/20 10/12→12/17 05/16→12/17 05/16→12/17 11/12→12/17	➡	+PR 1KE / 1KJ / 1KR / 1KY	2	**11.8171-0008.1**	**990049**	ATE

Brake Pad Set, disc brake

1.0 TFSI 1.2 TFSI	85 77 - 81	07/16→12/17 02/13→08/16	⬅	+PR 1LB		**13.0460-2617.2** **13.0470-2617.2**	**602617** **LD2617**	TRW + WK TRW + WK Ceramic
1.4 TFSI 1.4 TSI 1.5 TFSI	90 - 103 110 110	04/12→08/16 05/14→12/17 05/17→12/17	⬅	+PR 1ZA / 1ZD / 1ZE / 1ZP		**13.0460-2785.2** **13.0470-2785.2**	**602785** **LD2785**	TRW 25683 20,4 + WE / + WK TRW 25683 20,4 + WE / + WK Ceramic
1.6 TDI	77 - 81	10/12→12/17	➡	+PR 1KE / 1KR; + eFSB		**13.0460-7293.2**	**607293**	ATE 25008 16,3 - WE / - WK
1.8 TFSI 1.8 TFSI quattro 2.0 TDI	132 132 81 - 135	04/12→08/16 08/12→08/16 04/12→10/20	➡	+PR 1KJ / 1KY / 1KZ / 2ED; + eFSB		**13.0460-7294.2** **13.0470-7294.2**	**607294** **LD7294**	ATE 25009 16,4 - WE / - WK ATE 25009 16,4 - WE / - WK Ceramic
2.0 TDI quattro	110 - 135	10/12→12/17	➡	+PR 1KE; + eFSB		**13.0470-7293.2**	**LD7293**	ATE 25008 16,3 - WE / - WK Ceramic
2.0 TFSI 2.0 TFSI quattro	140 140	05/16→12/17 05/16→12/17						
1.6 TDI	85	02/17→10/20	⬅	+PR 1LB		**13.0460-2617.2** **13.0470-2617.2**	**602617** **LD2617**	TRW + WK TRW + WK Ceramic
			⬅	+PR 1ZA / 1ZD / 1ZE / 1ZP		**13.0460-2785.2** **13.0470-2785.2**	**602785** **LD2785**	TRW 25683 20,4 + WE / + WK TRW 25683 20,4 + WE / + WK Ceramic
			➡	+PR 1KE / 1KR; + eFSB		**13.0460-7293.2**	**607293**	ATE 25008 16,3 - WE / - WK
			➡	+PR 1KJ / 1KY / 1KZ / 2ED		**13.0460-7294.2** **13.0470-7294.2**	**607294** **LD7294**	ATE 25009 16,4 - WE / - WK ATE 25009 16,4 - WE / - WK Ceramic
			➡	+PR 1KE; + eFSB		**13.0470-7293.2**	**LD7293**	ATE 25008 16,3 - WE / - WK Ceramic
S3 quattro	206 - 221	11/12→12/17	⬅	+PR 1LB / 1LC / 1LJ		**13.0460-2617.2** **13.0470-2617.2**	**602617** **LD2617**	TRW + WK TRW + WK Ceramic
			⬅	+PR 1ZA / 1ZD / 1ZE / 1ZP		**13.0460-2785.2** **13.0470-2785.2**	**602785** **LD2785**	TRW 25683 20,4 + WE / + WK TRW 25683 20,4 + WE / + WK Ceramic
			➡	+PR 1KE / 1KR; + eFSB		**13.0460-7293.2**	**607293**	ATE 25008 16,3 - WE / - WK
			➡	+PR 1KJ / 1KY / 1KZ / 2ED; + eFSB		**13.0460-7294.2** **13.0470-7294.2**	**607294** **LD7294**	ATE 25009 16,4 - WE / - WK ATE 25009 16,4 - WE / - WK Ceramic
			➡	+PR 1KE; + eFSB		**13.0470-7293.2**	**LD7293**	ATE 25008 16,3 - WE / - WK Ceramic
S3 quattro	228	06/16→12/17	⬅	+PR 1LB / 1LC / 1LJ		**13.0460-2617.2**	**602617**	TRW + WK
			⬅	+PR 1ZA / 1ZD / 1ZE / 1ZP		**13.0460-2785.2**	**602785**	TRW 25683 20,4 + WE / + WK
			➡	+PR 1KE / 1KR; + eFSB		**13.0460-7293.2**	**607293**	ATE 25008 16,3 - WE / - WK
			➡	+PR 1KJ / 1KY / 1KZ / 2ED; + eFSB		**13.0460-7294.2**	**607294**	ATE 25009 16,4 - WE / - WK

Warning Contact, brake pad wear

1.0 TFSI	85	07/16→12/17	⬅	+PR 1ZA / 1ZD / 1ZE / 1ZP	1	**24.8190-0065.2**	**620065**	

© 2022 Continental Aftermarket & Services GmbH

	kW				! #			
AUDI - A3 (8V1, 8VK) 04/12→10/20								
Warning Contact, brake pad wear								
1.2 TFSI 1.4 TFSI 1.4 TSI 1.5 TFSI 1.6 TDI 1.8 TFSI 1.8 TFSI quattro 2.0 TDI 2.0 TDI quattro 2.0 TFSI 2.0 TFSI quattro S3 quattro	77 - 81 90 - 103 110 110 77 - 85 132 132 81 - 135 110 - 135 140 140 206 - 228	02/13→08/16 04/12→08/16 05/14→12/17 05/17→12/17 10/12→10/20 04/12→08/16 08/12→08/16 04/12→10/20 10/12→12/17 05/16→12/17 05/16→12/17 11/12→12/17	←	+PR 1ZA / 1ZD / 1ZE / 1ZP	1	**24.8190-0065.2**	**620065**	
Brake Disc								
1.0 TFSI 1.2 TFSI 1.4 TFSI 1.4 TSI 1.5 TFSI 1.6 TDI 1.8 TFSI 1.8 TFSI quattro 2.0 TDI 2.0 TDI quattro 2.0 TFSI 2.0 TFSI quattro	85 77 - 81 90 - 103 110 110 77 - 85 132 132 100 - 135 110 - 135 140 140	07/16→12/17 02/13→08/16 04/12→08/16 05/14→12/17 05/17→12/17 10/12→10/20 04/12→08/16 08/12→08/16 04/12→10/20 10/12→12/17 05/16→12/17 05/16→12/17	←	+PR 1ZE / 1ZP		**24.0125-0145.1**	**425145**	Ø 288 Brake Disc Thickness [mm] 25 Minimum thickness [mm] 22 Vented + S
			←	+PR 1ZA / 1ZD		**24.0125-0158.1** **24.0325-0158.1**	**425158** **525158**	Ø 312 Brake Disc Thickness [mm] 25 Minimum thickness [mm] 22 Vented + S Ø 312 Brake Disc Thickness [mm] 25 Minimum thickness [mm] 22 Vented + S
			←	+PR 1LB		**24.0130-0225.1**	**430225**	Ø 340 Brake Disc Thickness [mm] 30 Minimum thickness [mm] 27 Vented + S
			→	+PR 1KE / 1KR		**24.0110-0356.1**	**410356**	Ø 272 Brake Disc Thickness [mm] 9.7 Minimum thickness [mm] 8 + S
			→	+PR 2ED; + eFSB		**24.0112-0210.1**	**412210**	Ø 300 Brake Disc Thickness [mm] 12 Minimum thickness [mm] 10 + S
			→	+PR 1KJ / 1KY / 1KZ; + eFSB		**24.0122-0219.1**	**422219**	Ø 310 Brake Disc Thickness [mm] 22 Minimum thickness [mm] 20 Vented
2.0 TDI	81	01/13→08/16	←	+PR 1ZE / 1ZP		**24.0125-0145.1**	**425145**	Ø 288 Brake Disc Thickness [mm] 25 Minimum thickness [mm] 22 Vented + S
			←	+PR 1ZA / 1ZD		**24.0125-0158.1**	**425158**	Ø 312 Brake Disc Thickness [mm] 25 Minimum thickness [mm] 22 Vented + S
			←	+PR 1LB		**24.0130-0225.1**	**430225**	Ø 340 Brake Disc Thickness [mm] 30 Minimum thickness [mm] 27 Vented + S
			→	+PR 1KE / 1KR		**24.0110-0356.1**	**410356**	Ø 272 Brake Disc Thickness [mm] 9.7 Minimum thickness [mm] 8 + S
			→	+PR 2ED; + eFSB		**24.0112-0210.1**	**412210**	Ø 300 Brake Disc Thickness [mm] 12 Minimum thickness [mm] 10 + S
			→	+PR 1KJ / 1KY / 1KZ; + eFSB		**24.0122-0219.1**	**422219**	Ø 310 Brake Disc Thickness [mm] 22 Minimum thickness [mm] 20 Vented
S3 quattro	206 - 228	11/12→12/17	←	+PR 1ZE / 1ZP		**24.0125-0145.1**	**425145**	Ø 288 Brake Disc Thickness [mm] 25 Minimum thickness [mm] 22 Vented + S
			←	+PR 1ZA / 1ZD		**24.0125-0158.1**	**425158**	Ø 312 Brake Disc Thickness [mm] 25 Minimum thickness [mm] 22 Vented + S

© 2022 Continental Aftermarket & Services GmbH

AUDI - A3 (8V1, 8VK) 04/12→10/20

Brake Disc

	kW				! #			
S3 quattro	206 - 228	11/12→12/17	←	+PR 1ZA / 1ZD		**24.0325-0158.1**	**525158**	Ø 312 Brake Disc Thickness [mm] 25 Minimum thickness [mm] 22 Vented + S
			←	+PR 1LB / 1LC / 1LJ		**24.0130-0225.1**	**430225**	Ø 340 Brake Disc Thickness [mm] 30 Minimum thickness [mm] 27 Vented + S
			→	+PR 1KE / 1KR		**24.0110-0356.1**	**410356**	Ø 272 Brake Disc Thickness [mm] 9.7 Minimum thickness [mm] 8 + S
			→	+PR 2ED; + eFSB		**24.0112-0210.1**	**412210**	Ø 300 Brake Disc Thickness [mm] 12 Minimum thickness [mm] 10 + S
			→	+PR 1KJ / 1KY / 1KZ; + eFSB		**24.0122-0219.1**	**422219**	Ø 310 Brake Disc Thickness [mm] 22 Minimum thickness [mm] 20 Vented

Sensor, wheel speed

1.0 TFSI 1.2 TFSI	85 77 - 81	07/16→12/17 02/13→08/16	←			**24.0711-5273.3**	**360303**	
			←			**24.0711-5274.3**	**360304**	
1.4 TFSI	92 - 103	03/13→08/16	→	for cruise control system	2	**24.0711-6337.3**	**360390**	
1.4 TSI 1.5 TFSI 1.6 TDI 2.0 TDI 2.0 TFSI	110 110 77 - 85 81 - 135 140	05/14→12/17 05/17→12/17 10/12→10/20 09/12→10/20 05/16→12/17	→	for vehicles with parking assistant system	2	**24.0711-6337.3**	**360390**	
1.4 TFSI 1.8 TFSI 2.0 TDI	90 132 110	04/12→05/14 04/12→08/16 04/12→12/17	←	08/12→;		**24.0711-5273.3**	**360303**	
			←	08/12→;		**24.0711-5274.3**	**360304**	
			→	08/12→; for cruise control system	2	**24.0711-6337.3**	**360390**	
			→	08/12→; for vehicles with parking assistant system	2	**24.0711-6337.3**	**360390**	
1.8 TFSI quattro 2.0 TDI quattro	132 110 - 135	08/12→08/16 10/12→12/17	←			**24.0711-5273.3**	**360303**	
			←			**24.0711-5274.3**	**360304**	
2.0 TFSI quattro S3 quattro	140 206 - 228	05/16→12/17 11/12→12/17	→	for vehicles with parking assistant system;		**24.0711-5401.3**	**360330**	
			→	for cruise control system;		**24.0711-5401.3**	**360330**	
			→	for cruise control system;		**24.0711-5402.3**	**360331**	
			→	for vehicles with parking assistant system;		**24.0711-5402.3**	**360331**	

Slave Cylinder, clutch

1.0 TFSI 1.2 TFSI	85 77 - 81	07/16→12/17 02/13→08/16		+PR 0EC		**24.2519-1706.3**	**040096**	Ø 19
1.4 TFSI	90 - 103	04/12→08/16						
1.4 TSI 1.5 TFSI 1.6 TDI	110 110 77 - 85	05/14→12/17 05/17→12/17 10/12→10/20						
1.8 TFSI 1.8 TFSI quattro 2.0 TDI	132 132 81 - 135	04/12→08/16 08/12→08/16 04/12→10/20						
2.0 TDI quattro	110 - 135	10/12→12/17						
2.0 TFSI 2.0 TFSI quattro S3 quattro	140 140 206 - 228	05/16→12/17 05/16→12/17 11/12→12/17						

Control Element, parking brake caliper

1.0 TFSI 1.2 TFSI	85 77 - 81	07/16→12/17 02/13→08/16	→	+PR 1KE / 1KR / 1KZ;		**11.9282-1001.3**	**250159**	ATE
			→	+PR 1KE / 1KR / 1KZ;		**11.9282-1002.3**	**250160**	ATE
1.4 TFSI	90 - 103	04/12→08/16						
1.4 TSI 1.5 TFSI	110 110	05/14→12/17 05/17→12/17						

	kW				! #			
AUDI - A3 (8V1, 8VK) 04/12→10/20								
Control Element, parking brake caliper								
1.6 TDI	77 - 85	10/12→10/20	➡	+PR 1KE / 1KR / 1KZ;		**11.9282-1001.3**	**250159**	ATE
1.8 TFSI	132	04/12→08/16	➡	+PR 1KE / 1KR / 1KZ;		**11.9282-1002.3**	**250160**	ATE
1.8 TFSI quattro	132	08/12→08/16						
2.0 TDI	81 - 135	04/12→10/20						
2.0 TDI quattro	110 - 135	10/12→12/17						
2.0 TFSI	140	05/16→12/17						
2.0 TFSI quattro	140	05/16→12/17						
S3 quattro	206 - 228	11/12→12/17						
AUDI - A3 Convertible (8P7) 04/08→05/13								
Guide Bolt, brake caliper								
1.2 TFSI	77	03/10→05/13		+PR 1ZE	2	**11.8171-0008.1**	**990049**	ATE
1.4 TFSI	92	02/11→05/13		+PR 1LJ	2	**11.8171-0008.1**	**990049**	ATE
1.6	75	09/08→05/10						
1.6 TDI	77	05/09→05/13						
1.8 TFSI	118	04/08→05/13						
1.9 TDI	77	04/08→10/09						
2.0 TDI	100 - 103	04/08→05/13						
2.0 TFSI	147	04/08→05/13						
Brake Disc								
1.2 TFSI	77	03/10→05/13	⬅	+PR 1ZE		**24.0125-0145.1**	**425145**	Ø 288 Brake Disc Thickness [mm] 25 Minimum thickness [mm] 22 Vented + S
1.4 TFSI	92	02/11→05/13						
1.6	75	09/08→05/10						
1.6 TDI	77	05/09→05/13						
1.8 TFSI	118	04/08→05/13	⬅	+PR 1LJ / 1ZA		**24.0125-0158.1**	**425158**	Ø 312 Brake Disc Thickness [mm] 25 Minimum thickness [mm] 22 Vented + S
1.9 TDI	77	04/08→10/09						
2.0 TDI	100 - 103	04/08→05/13						
2.0 TFSI	147	04/08→05/13				**24.0325-0158.1**	**525158**	Ø 312 Brake Disc Thickness [mm] 25 Minimum thickness [mm] 22 Vented + S
			➡	+PR 1KS		**24.0110-0356.1**	**410356**	Ø 272 Brake Disc Thickness [mm] 9.7 Minimum thickness [mm] 8 + S
Slave Cylinder, clutch								
1.2 TFSI	77	03/10→05/13		+PR 0EM		**24.2519-1706.3**	**040096**	Ø 19
1.4 TFSI	92	02/11→05/13						
1.6	75	09/08→05/10						
1.6 TDI	77	05/09→05/13						
1.8 TFSI	118	04/08→05/13						
1.9 TDI	77	04/08→10/09						
2.0 TDI	100 - 103	04/08→05/13						
2.0 TFSI	147	04/08→05/13						
AUDI - A3 Convertible (8V7, 8VE) 10/13→								
Brake Master Cylinder								
1.4 TFSI	85 - 103	10/13→		for left-hand drive vehicles		**24.4123-1719.3**	**011017**	TRW Ø 23.8 without brake fluid reservoir
1.4 TSI	110	05/14→10/20						
1.5 TFSI	110	05/17→10/18						
1.6 TDI	81 - 85	02/14→10/20						
1.8 TFSI	125 - 132	10/13→10/20						
1.8 TFSI quattro	132	03/14→						
2.0 TDI	100 - 135	10/13→						
2.0 TDI quattro	110 - 135	03/14→10/20						
2.0 TFSI	140	05/16→10/20						
2.0 TFSI quattro	140 - 162	05/14→10/20						
35 TFSI	110	10/18→10/20						
40 TFSI	140	11/18→10/20						
40 TFSI quattro	140	11/18→10/20						
S3 quattro	210 - 228	03/14→						

© 2022 Continental Aftermarket & Services GmbH

AUDI - A3 Convertible (8V7, 8VE) 10/13→

Brake Caliper

	kW				! #			
1.4 TFSI	85 - 103	10/13→	←	+PR 1ZA / 1ZD;		24.3571-1801.5	241387	without holder
1.4 TSI	110	05/14→10/20	←	+PR 1ZA / 1ZD;		24.3571-1802.5	241388	without holder
1.5 TFSI	110	05/17→10/18	←	+PR 1LB;		24.3601-1727.5	240786	TRW without holder
1.6 TDI	81 - 85	02/14→10/20	←	+PR 1LB;		24.3601-1728.5	240787	TRW without holder
1.8 TFSI	125 - 132	10/13→10/20	→	+PR 1KE / 1KR; + eFSB;		24.6238-7023.5 24.6238-7047.5	241241 241181	ATE without holder + eFSB ATE without holder + eFSB
1.8 TFSI quattro	132	03/14→						
2.0 TDI	100 - 135	10/13→	→	+PR 1KE / 1KR; + eFSB;		24.6238-7024.5 24.6238-7048.5	241242 241182	ATE without holder + eFSB ATE without holder + eFSB
2.0 TDI quattro	110 - 135	03/14→10/20						
2.0 TFSI	140	05/16→10/20	→	+PR 1KZ;		24.6242-7001.5	241335	ATE + EMot / without holder + eFSB
2.0 TFSI quattro	140 - 162	05/14→10/20	→	+PR 1KZ;		24.6242-7002.5	241336	ATE + EMot / without holder + eFSB
35 TFSI	110	10/18→10/20						
40 TFSI	140	11/18→10/20	→	+PR 1KJ; + eFSB;		24.6242-7017.5	241185	ATE without holder + eFSB
40 TFSI quattro	140	11/18→10/20	→	+PR 1KJ; + eFSB;		24.6242-7018.5	241186	ATE without holder + eFSB
S3 quattro	210 - 228	03/14→						

Guide Bolt, brake caliper

1.4 TFSI	85 - 103	10/13→	→	+PR 1KE / 1KJ / 1KR / 1KY	2	11.8171-0008.1	990049	ATE
1.4 TSI	110	05/14→10/20						
1.5 TFSI	110	05/17→10/18						
1.6 TDI	81 - 85	02/14→10/20						
1.8 TFSI	125 - 132	10/13→10/20						
1.8 TFSI quattro	132	03/14→						
2.0 TDI	100 - 135	10/13→						
2.0 TDI quattro	110 - 135	03/14→10/20						
2.0 TFSI	140	05/16→10/20						
2.0 TFSI quattro	140 - 162	05/14→10/20						
35 TFSI	110	10/18→10/20						
40 TFSI	140	11/18→10/20						
40 TFSI quattro	140	11/18→10/20						
S3 quattro	210 - 228	03/14→						

Brake Pad Set, disc brake

1.4 TFSI	85 - 103	10/13→	←	+PR 1LB		13.0460-2617.2 13.0470-2617.2	602617 LD2617	TRW + WK TRW + WK Ceramic
1.4 TSI	110	05/14→10/20						
1.6 TDI	81	02/14→10/20	←	+PR 1ZA / 1ZD / 1ZE / 1ZP		13.0460-2785.2 13.0470-2785.2	602785 LD2785	TRW 25683 20,4 + WE / + WK TRW 25683 20,4 + WE / + WK Ceramic
1.8 TFSI	125 - 132	10/13→10/20						
1.8 TFSI quattro	132	03/14→						
2.0 TDI	100 - 135	10/13→	→	+PR 1KE / 1KR; + eFSB		13.0460-7293.2	607293	ATE 25008 16,3 - WE / - WK
2.0 TDI quattro	110 - 135	03/14→10/20	→	+PR 1KJ / 1KY / 1KZ / 2ED; + eFSB		13.0460-7294.2 13.0470-7294.2	607294 LD7294	ATE 25009 16,4 - WE / - WK ATE 25009 16,4 - WE / - WK Ceramic
2.0 TFSI	140	05/16→10/20						
2.0 TFSI quattro	140 - 162	05/14→10/20	→	+PR 1KE; + eFSB		13.0470-7293.2	LD7293	ATE 25008 16,3 - WE / - WK Ceramic
35 TFSI	110	10/18→10/20						
40 TFSI	140	11/18→10/20						
40 TFSI quattro	140	11/18→10/20						
1.5 TFSI	110	05/17→10/18	←	+PR 1LB		13.0460-2617.2 13.0470-2617.2	602617 LD2617	TRW + WK TRW + WK Ceramic
1.6 TDI	85	04/17→10/20						
			←	+PR 1ZA / 1ZD / 1ZE / 1ZP		13.0460-2785.2 13.0470-2785.2	602785 LD2785	TRW 25683 20,4 + WE / + WK TRW 25683 20,4 + WE / + WK Ceramic
			→	+PR 1KE / 1KR; + eFSB		13.0460-7293.2	607293	ATE 25008 16,3 - WE / - WK
			→	+PR 1KJ / 1KY / 1KZ / 2ED		13.0460-7294.2 13.0470-7294.2	607294 LD7294	ATE 25009 16,4 - WE / - WK ATE 25009 16,4 - WE / - WK Ceramic
			→	+PR 1KE; + eFSB		13.0470-7293.2	LD7293	ATE 25008 16,3 - WE / - WK Ceramic
S3 quattro	210	03/14→	←	04/14→; +PR 1LB / 1LC / 1LJ		13.0460-2617.2 13.0470-2617.2	602617 LD2617	TRW + WK TRW + WK Ceramic
			←	+PR 1ZA / 1ZD / 1ZE / 1ZP		13.0460-2785.2 13.0470-2785.2	602785 LD2785	TRW 25683 20,4 + WE / + WK TRW 25683 20,4 + WE / + WK Ceramic

© 2022 Continental Aftermarket & Services GmbH

AUDI - A3 Convertible (8V7, 8VE) 10/13→

	kW				! #			
Brake Pad Set, disc brake								
S3 quattro	210	03/14→	➡	+PR 1KE / 1KR; + eFSB		**13.0460-7293.2**	**607293**	ATE 25008 16,3 - WE / - WK
			➡	+PR 1KJ / 1KY / 1KZ / 2ED; + eFSB		**13.0460-7294.2** **13.0470-7294.2**	**607294** **LD7294**	ATE 25009 16,4 - WE / - WK ATE 25009 16,4 - WE / - WK Ceramic
			➡	+PR 1KE; + eFSB		**13.0470-7293.2**	**LD7293**	ATE 25008 16,3 - WE / - WK Ceramic
S3 quattro	213 - 221	04/14→10/20	⬅	+PR 1LB / 1LC / 1LJ		**13.0460-2617.2** **13.0470-2617.2**	**602617** **LD2617**	TRW + WK TRW + WK Ceramic
			⬅	+PR 1ZA / 1ZD / 1ZE / 1ZP		**13.0460-2785.2** **13.0470-2785.2**	**602785** **LD2785**	TRW 25683 20,4 + WE / + WK TRW 25683 20,4 + WE / + WK Ceramic
			➡	+PR 1KE / 1KR; + eFSB		**13.0460-7293.2**	**607293**	ATE 25008 16,3 - WE / - WK
			➡	+PR 1KJ / 1KY / 1KZ / 2ED; + eFSB		**13.0460-7294.2** **13.0470-7294.2**	**607294** **LD7294**	ATE 25009 16,4 - WE / - WK ATE 25009 16,4 - WE / - WK Ceramic
			➡	+PR 1KE; + eFSB		**13.0470-7293.2**	**LD7293**	ATE 25008 16,3 - WE / - WK Ceramic
S3 quattro	228	07/16→10/20	⬅	+PR 1LB / 1LC / 1LJ		**13.0460-2617.2**	**602617**	TRW + WK
			⬅	+PR 1ZA / 1ZD / 1ZE / 1ZP		**13.0460-2785.2**	**602785**	TRW 25683 20,4 + WE / + WK
			➡	+PR 1KE / 1KR; + eFSB		**13.0460-7293.2**	**607293**	ATE 25008 16,3 - WE / - WK
			➡	+PR 1KJ / 1KY / 1KZ / 2ED; + eFSB		**13.0460-7294.2**	**607294**	ATE 25009 16,4 - WE / - WK
Warning Contact, brake pad wear								
1.4 TFSI	85 - 103	10/13→	⬅	+PR 1ZA / 1ZD / 1ZE / 1ZP	1	**24.8190-0065.2**	**620065**	
1.4 TSI	110	05/14→10/20						
1.5 TFSI	110	05/17→10/18						
1.6 TDI	81 - 85	02/14→10/20						
1.8 TFSI	125 - 132	10/13→10/20						
1.8 TFSI quattro	132	03/14→						
2.0 TDI	100 - 135	10/13→						
2.0 TDI quattro	110 - 135	03/14→10/20						
2.0 TFSI	140	05/16→10/20						
2.0 TFSI quattro	140 - 162	05/14→10/20						
35 TFSI	110	10/18→10/20						
40 TFSI	140	11/18→10/20						
40 TFSI quattro	140	11/18→10/20						
S3 quattro	210 - 228	03/14→						
Brake Disc								
1.4 TFSI	85 - 103	10/13→	⬅	+PR 1ZE / 1ZP		**24.0125-0145.1**	**425145**	Ø 288 Brake Disc Thickness [mm] 25 Minimum thickness [mm] 22 Vented + S
1.4 TSI	110	05/14→10/20						
1.5 TFSI	110	05/17→10/18						
1.6 TDI	81 - 85	02/14→10/20	⬅	+PR 1ZA / 1ZD		**24.0125-0158.1**	**425158**	Ø 312 Brake Disc Thickness [mm] 25 Minimum thickness [mm] 22 Vented + S
1.8 TFSI	132	10/13→07/16						
1.8 TFSI quattro	132	03/14→						
2.0 TDI	100 - 135	10/13→				**24.0325-0158.1**	**525158**	Ø 312 Brake Disc Thickness [mm] 25 Minimum thickness [mm] 22 Vented + S
2.0 TDI quattro	110 - 135	03/14→10/20						
2.0 TFSI	140	05/16→10/20						
2.0 TFSI quattro	140	05/16→10/20	⬅	+PR 1LB		**24.0130-0225.1**	**430225**	Ø 340 Brake Disc Thickness [mm] 30 Minimum thickness [mm] 27 Vented + S
40 TFSI quattro	140	11/18→10/20						
			➡	+PR 1KE / 1KR		**24.0110-0356.1**	**410356**	Ø 272 Brake Disc Thickness [mm] 9.7 Minimum thickness [mm] 8 + S
			➡	+PR 2ED; + eFSB		**24.0112-0210.1**	**412210**	Ø 300 Brake Disc Thickness [mm] 12 Minimum thickness [mm] 10 + S
			➡	+PR 1KJ / 1KY / 1KZ; + eFSB		**24.0122-0219.1**	**422219**	Ø 310 Brake Disc Thickness [mm] 22 Minimum thickness [mm] 20 Vented

© 2022 Continental Aftermarket & Services GmbH

AUDI - A3 Convertible (8V7, 8VE) 10/13→

Brake Disc

	kW				! #			
1.8 TFSI 2.0 TFSI quattro 35 TFSI 40 TFSI	125 162 110 140	05/14→10/20 05/14→10/20 10/18→10/20 11/18→10/20	←	+PR 1ZE / 1ZP		**24.0125-0145.1**	**425145**	Ø 288 Brake Disc Thickness [mm] 25 Minimum thickness [mm] 22 Vented + S
			←	+PR 1ZA / 1ZD		**24.0125-0158.1**	**425158**	Ø 312 Brake Disc Thickness [mm] 25 Minimum thickness [mm] 22 Vented + S
			←	+PR 1LB		**24.0130-0225.1**	**430225**	Ø 340 Brake Disc Thickness [mm] 30 Minimum thickness [mm] 27 Vented + S
			→	+PR 1KE / 1KR		**24.0110-0356.1**	**410356**	Ø 272 Brake Disc Thickness [mm] 9.7 Minimum thickness [mm] 8 + S
			→	+PR 2ED; + eFSB		**24.0112-0210.1**	**412210**	Ø 300 Brake Disc Thickness [mm] 12 Minimum thickness [mm] 10 + S
			→	+PR 1KJ / 1KY / 1KZ; + eFSB		**24.0122-0219.1**	**422219**	Ø 310 Brake Disc Thickness [mm] 22 Minimum thickness [mm] 20 Vented
S3 quattro	210 - 228	03/14→	←	+PR 1ZE / 1ZP		**24.0125-0145.1**	**425145**	Ø 288 Brake Disc Thickness [mm] 25 Minimum thickness [mm] 22 Vented + S
			←	+PR 1ZA / 1ZD		**24.0125-0158.1** **24.0325-0158.1**	**425158** **525158**	Ø 312 Brake Disc Thickness [mm] 25 Minimum thickness [mm] 22 Vented + S Ø 312 Brake Disc Thickness [mm] 25 Minimum thickness [mm] 22 Vented + S
			←	+PR 1LB / 1LC / 1LJ		**24.0130-0225.1**	**430225**	Ø 340 Brake Disc Thickness [mm] 30 Minimum thickness [mm] 27 Vented + S
			→	+PR 1KE / 1KR		**24.0110-0356.1**	**410356**	Ø 272 Brake Disc Thickness [mm] 9.7 Minimum thickness [mm] 8 + S
			→	+PR 2ED; + eFSB		**24.0112-0210.1**	**412210**	Ø 300 Brake Disc Thickness [mm] 12 Minimum thickness [mm] 10 + S
			→	+PR 1KJ / 1KY / 1KZ; + eFSB		**24.0122-0219.1**	**422219**	Ø 310 Brake Disc Thickness [mm] 22 Minimum thickness [mm] 20 Vented
S3 quattro	213	07/16→10/20	←	+PR 1ZE / 1ZP		**24.0125-0145.1**	**425145**	Ø 288 Brake Disc Thickness [mm] 25 Minimum thickness [mm] 22 Vented + S
			←	+PR 1ZA / 1ZD		**24.0125-0158.1** **24.0325-0158.1**	**425158** **525158**	Ø 312 Brake Disc Thickness [mm] 25 Minimum thickness [mm] 22 Vented + S Ø 312 Brake Disc Thickness [mm] 25 Minimum thickness [mm] 22 Vented + S
			←	+PR 1LB / 1LC / 1LJ		**24.0130-0225.1**	**430225**	Ø 340 Brake Disc Thickness [mm] 30 Minimum thickness [mm] 27 Vented + S
			→	+PR 2ED; + eFSB		**24.0112-0210.1**	**412210**	Ø 300 Brake Disc Thickness [mm] 12 Minimum thickness [mm] 10 + S
			→	+PR 1KJ / 1KY / 1KZ; + eFSB		**24.0122-0219.1**	**422219**	Ø 310 Brake Disc Thickness [mm] 22 Minimum thickness [mm] 20 Vented

Sensor, wheel speed

1.4 TFSI	85 - 103	10/13→	←			**24.0711-5273.3**	**360303**	
1.4 TSI	110	05/14→10/20	←			**24.0711-5274.3**	**360304**	
1.5 TFSI	110	05/17→10/18						

© 2022 Continental Aftermarket & Services GmbH

	kW				! #			
AUDI - A3 Convertible (8V7, 8VE) 10/13→								
Sensor, wheel speed								
1.6 TDI	81 - 85	02/14→10/20	➡	for cruise control system	2	**24.0711-6337.3**	**360390**	
1.8 TFSI	125 - 132	10/13→10/20	➡	for vehicles with parking assistant system	2	**24.0711-6337.3**	**360390**	
2.0 TDI	100 - 135	10/13→						
2.0 TFSI	140	05/16→10/20						
1.8 TFSI quattro	132	03/14→	⬅	⊞		**24.0711-5273.3**	**360303**	
2.0 TDI quattro	110 - 135	03/14→10/20	⬅	⊟		**24.0711-5274.3**	**360304**	
2.0 TFSI quattro	140 - 162	05/14→10/20	➡	for vehicles with parking assistant system; ⊞		**24.0711-5401.3**	**360330**	
S3 quattro	213 - 228	04/14→10/20	➡	for cruise control system; ⊞		**24.0711-5401.3**	**360330**	
			➡	for cruise control system; ⊟		**24.0711-5402.3**	**360331**	
			➡	for vehicles with parking assistant system; ⊟		**24.0711-5402.3**	**360331**	
S3 quattro	210	03/14→	⬅	04/14→; ⊞		**24.0711-5273.3**	**360303**	
			⬅	04/14→; ⊟		**24.0711-5274.3**	**360304**	
			➡	04/14→; for vehicles with parking assistant system; ⊞		**24.0711-5401.3**	**360330**	
			➡	04/14→; for cruise control system; ⊞		**24.0711-5401.3**	**360330**	
			➡	04/14→; for vehicles with parking assistant system; ⊟		**24.0711-5402.3**	**360331**	
			➡	04/14→; for cruise control system; ⊟		**24.0711-5402.3**	**360331**	
Slave Cylinder, clutch								
1.4 TFSI	85 - 103	10/13→		+PR 0EC		**24.2519-1706.3**	**040096**	Ø 19
1.4 TSI	110	05/14→10/20						
1.5 TFSI	110	05/17→10/18						
1.6 TDI	81 - 85	02/14→10/20						
1.8 TFSI	125 - 132	10/13→10/20						
1.8 TFSI quattro	132	03/14→						
2.0 TDI	100 - 135	10/13→						
2.0 TDI quattro	110 - 135	03/14→10/20						
2.0 TFSI	140	05/16→10/20						
2.0 TFSI quattro	140 - 162	05/14→10/20						
35 TFSI	110	10/18→10/20						
40 TFSI	140	11/18→10/20						
40 TFSI quattro	140	11/18→10/20						
S3 quattro	210 - 228	03/14→						
Control Element, parking brake caliper								
1.4 TFSI	85 - 103	10/13→	➡	+PR 1KE / 1KR / 1KZ; ⊞		**11.9282-1001.3**	**250159**	ATE
1.4 TSI	110	05/14→10/20	➡	+PR 1KE / 1KR / 1KZ; ⊟		**11.9282-1002.3**	**250160**	ATE
1.5 TFSI	110	05/17→10/18						
1.6 TDI	81 - 85	02/14→10/20						
1.8 TFSI	125 - 132	10/13→10/20						
1.8 TFSI quattro	132	03/14→						
2.0 TDI	100 - 135	10/13→						
2.0 TDI quattro	110 - 135	03/14→10/20						
2.0 TFSI	140	05/16→10/20						
2.0 TFSI quattro	140 - 162	05/14→10/20						
35 TFSI	110	10/18→10/20						
40 TFSI	140	11/18→10/20						
40 TFSI quattro	140	11/18→10/20						
S3 quattro	210 - 228	03/14→						
AUDI - A3 Limousine (8VS, 8VM) 05/13→								
Brake Master Cylinder								
1.0 TFSI	85	07/16→10/20		for left-hand drive vehicles		**24.4123-1719.3**	**011017**	TRW Ø 23.8 without brake fluid reservoir

© 2022 Continental Aftermarket & Services GmbH

AUDI - A3 Limousine (8VS, 8VM) 05/13→

Brake Master Cylinder

	kW				! #			
1.2 TFSI	77 - 81	10/13→		for left-hand drive vehicles		**24.4123-1719.3**	**011017**	TRW Ø 23.8 without brake fluid reservoir
1.4 TFSI	90 - 103	05/13→						
1.4 TSI	110	05/14→10/20						
1.5 TFSI	110	05/17→10/18						
1.6 TDI	77 - 85	09/13→						
1.6 TDI quattro	81	05/15→						
1.8 TFSI	125 - 132	05/13→						
1.8 TFSI quattro	132	11/13→						
2.0 TDI	81 - 135	05/13→						
2.0 TDI quattro	110 - 135	10/13→10/20						
2.0 TFSI	140 - 162	11/15→10/20						
2.0 TFSI quattro	140	05/16→10/20						
30 TDI	85	07/18→10/20						
30 TFSI	85	07/18→10/20						
35 TDI	110	07/18→10/20						
35 TFSI	110	10/18→10/20						
40 TDI quattro	135	07/18→07/19						
40 TFSI	140	07/18→10/20						
40 TFSI quattro	140	07/18→10/20						
RS3 quattro	294	04/17→10/20						
S3 quattro	206 - 228	10/13→						

Brake Caliper

	kW				! #			
1.0 TFSI	85	07/16→10/20	←	+PR 1ZA / 1ZD;		**24.3571-1801.5**	**241387**	without holder
1.2 TFSI	77 - 81	10/13→	←	+PR 1ZA / 1ZD;		**24.3571-1802.5**	**241388**	without holder
1.4 TFSI	90 - 103	05/13→	←	+PR 1LB;		**24.3601-1727.5**	**240786**	TRW without holder
1.4 TSI	110	05/14→10/20	←	+PR 1LB;		**24.3601-1728.5**	**240787**	TRW without holder
1.5 TFSI	110	05/17→10/18	→	+PR 1KE / 1KR; + eFSB;		**24.6238-7023.5** **24.6238-7047.5**	**241241** **241181**	ATE without holder + eFSB ATE without holder + eFSB
1.6 TDI	77 - 85	09/13→						
1.6 TDI quattro	81	05/15→	→	+PR 1KE / 1KR; + eFSB;		**24.6238-7024.5** **24.6238-7048.5**	**241242** **241182**	ATE without holder + eFSB ATE without holder + eFSB
1.8 TFSI	125 - 132	05/13→						
1.8 TFSI quattro	132	11/13→	→	+PR 1KZ;		**24.6242-7001.5**	**241335**	ATE + EMot / without holder + eFSB
2.0 TDI	81 - 135	05/13→						
2.0 TDI quattro	110 - 135	10/13→10/20	→	+PR 1KZ;		**24.6242-7002.5**	**241336**	ATE + EMot / without holder + eFSB
2.0 TFSI	140 - 162	11/15→10/20	→	+PR 1KJ; + eFSB;		**24.6242-7017.5**	**241185**	ATE without holder + eFSB
2.0 TFSI quattro	140	05/16→10/20	→	+PR 1KJ; + eFSB;		**24.6242-7018.5**	**241186**	ATE without holder + eFSB
30 TDI	85	07/18→10/20						
30 TFSI	85	07/18→10/20						
35 TDI	110	07/18→10/20						
35 TFSI	110	10/18→10/20						
40 TDI quattro	135	07/18→07/19						
40 TFSI	140	07/18→10/20						
40 TFSI quattro	140	07/18→10/20						
RS3 quattro	294	04/17→10/20						
S3 quattro	206 - 228	10/13→						

Guide Bolt, brake caliper

	kW				! #			
1.0 TFSI	85	07/16→10/20	→	+PR 1KE / 1KJ / 1KR / 1KY	2	**11.8171-0008.1**	**990049**	ATE
1.2 TFSI	77 - 81	10/13→						
1.4 TFSI	90 - 103	05/13→						
1.4 TSI	110	05/14→10/20						
1.5 TFSI	110	05/17→10/18						
1.6 TDI	77 - 85	09/13→						
1.6 TDI quattro	81	05/15→						
1.8 TFSI	125 - 132	05/13→						
1.8 TFSI quattro	132	11/13→						
2.0 TDI	81 - 135	05/13→						
2.0 TDI quattro	110 - 135	10/13→10/20						
2.0 TFSI	140 - 162	11/15→10/20						
2.0 TFSI quattro	140	05/16→10/20						
30 TDI	85	07/18→10/20						

AUDI - A3 Limousine (8VS, 8VM) 05/13→

	kW				! #			
Guide Bolt, brake caliper								
30 TFSI	85	07/18→10/20	➡	+PR 1KE / 1KJ / 1KR / 1KY	2	**11.8171-0008.1**	**990049**	ATE
35 TDI	110	07/18→10/20						
35 TFSI	110	10/18→10/20						
40 TDI quattro	135	07/18→07/19						
40 TFSI	140	07/18→10/20						
40 TFSI quattro	140	07/18→10/20						
RS3 quattro	294	04/17→10/20						
S3 quattro	206 - 228	10/13→						
Brake Pad Set, disc brake								
1.0 TFSI	85	07/16→10/20	⬅	+PR 1LB		**13.0460-2617.2**	**602617**	TRW + WK
1.2 TFSI	77 - 81	10/13→				**13.0470-2617.2**	**LD2617**	TRW + WK Ceramic
1.4 TFSI	90 - 103	05/13→	⬅	+PR 1ZA / 1ZD / 1ZE / 1ZP		**13.0460-2785.2**	**602785**	TRW 25683 20,4 + WE / + WK
						13.0470-2785.2	**LD2785**	TRW 25683 20,4 + WE / + WK Ceramic
1.4 TSI	110	05/14→10/20						
1.5 TFSI	110	05/17→10/18						
1.6 TDI	77 - 85	09/13→	➡	+PR 1KE / 1KR; + eFSB		**13.0460-7293.2**	**607293**	ATE 25008 16,3 - WE / - WK
			➡	+PR 1KJ / 1KY / 1KZ / 2ED; + eFSB		**13.0460-7294.2**	**607294**	ATE 25009 16,4 - WE / - WK
1.6 TDI quattro	81	05/15→				**13.0470-7294.2**	**LD7294**	ATE 25009 16,4 - WE / - WK Ceramic
1.8 TFSI	125 - 132	05/13→						
1.8 TFSI quattro	132	11/13→	➡	+PR 1KE; + eFSB		**13.0470-7293.2**	**LD7293**	ATE 25008 16,3 - WE / - WK Ceramic
2.0 TDI	81 - 135	05/13→						
2.0 TDI quattro	110 - 135	10/13→10/20						
2.0 TFSI	140 - 162	11/15→10/20						
2.0 TFSI quattro	140	05/16→10/20						
30 TDI	85	07/18→10/20						
30 TFSI	85	07/18→10/20						
35 TDI	110	07/18→10/20						
35 TFSI	110	10/18→10/20						
40 TDI quattro	135	07/18→07/19						
40 TFSI	140	07/18→10/20						
40 TFSI quattro	140	07/18→10/20						
S3 quattro	215	05/14→10/20						
RS3 quattro	294	04/17→10/20	⬅	+PR 1LB		**13.0460-2617.2**	**602617**	TRW + WK
			⬅	+PR 1ZA / 1ZD / 1ZE / 1ZP		**13.0460-2785.2**	**602785**	TRW 25683 20,4 + WE / + WK
			➡	+PR 1KE / 1KR; + eFSB		**13.0460-7293.2**	**607293**	ATE 25008 16,3 - WE / - WK
			➡	+PR 1KJ / 1KY / 1KZ / 2ED		**13.0460-7294.2**	**607294**	ATE 25009 16,4 - WE / - WK
S3 quattro	206 - 221	10/13→	⬅	+PR 1LB / 1LC / 1LJ		**13.0460-2617.2**	**602617**	TRW + WK
						13.0470-2617.2	**LD2617**	TRW + WK Ceramic
			⬅	+PR 1ZA / 1ZD / 1ZE / 1ZP		**13.0460-2785.2**	**602785**	TRW 25683 20,4 + WE / + WK
						13.0470-2785.2	**LD2785**	TRW 25683 20,4 + WE / + WK Ceramic
			➡	+PR 1KE / 1KR; + eFSB		**13.0460-7293.2**	**607293**	ATE 25008 16,3 - WE / - WK
			➡	+PR 1KJ / 1KY / 1KZ / 2ED; + eFSB		**13.0460-7294.2**	**607294**	ATE 25009 16,4 - WE / - WK
						13.0470-7294.2	**LD7294**	ATE 25009 16,4 - WE / - WK Ceramic
			➡	+PR 1KE; + eFSB		**13.0470-7293.2**	**LD7293**	ATE 25008 16,3 - WE / - WK Ceramic
S3 quattro	228	06/16→10/20	⬅	+PR 1LB / 1LC / 1LJ		**13.0460-2617.2**	**602617**	TRW + WK
			⬅	+PR 1ZA / 1ZD / 1ZE / 1ZP		**13.0460-2785.2**	**602785**	TRW 25683 20,4 + WE / + WK
			➡	+PR 1KE / 1KR; + eFSB		**13.0460-7293.2**	**607293**	ATE 25008 16,3 - WE / - WK
			➡	+PR 1KJ / 1KY / 1KZ / 2ED; + eFSB		**13.0460-7294.2**	**607294**	ATE 25009 16,4 - WE / - WK
Warning Contact, brake pad wear								
1.0 TFSI	85	07/16→10/20	⬅	+PR 1ZA / 1ZD / 1ZE / 1ZP	1	**24.8190-0065.2**	**620065**	
1.2 TFSI	77 - 81	10/13→						
1.4 TFSI	90 - 103	05/13→						
1.4 TSI	110	05/14→10/20						
1.5 TFSI	110	05/17→10/18						
1.6 TDI	77 - 85	09/13→						
1.6 TDI quattro	81	05/15→						
1.8 TFSI	125 - 132	05/13→						
1.8 TFSI quattro	132	11/13→						
2.0 TDI	81 - 135	05/13→						

© 2022 Continental Aftermarket & Services GmbH

AUDI - A3 Limousine (8VS, 8VM) 05/13→

Warning Contact, brake pad wear

	kW				! #			
2.0 TDI quattro	110 - 135	10/13→10/20	←	+PR 1ZA / 1ZD / 1ZE / 1ZP	1	**24.8190-0065.2**	**620065**	
2.0 TFSI	140 - 162	11/15→10/20						
2.0 TFSI quattro	140	05/16→10/20						
30 TDI	85	07/18→10/20						
30 TFSI	85	07/18→10/20						
35 TDI	110	07/18→10/20						
35 TFSI	110	10/18→10/20						
40 TDI quattro	135	07/18→07/19						
40 TFSI	140	07/18→10/20						
40 TFSI quattro	140	07/18→10/20						
RS3 quattro	294	04/17→10/20						
S3 quattro	206 - 228	10/13→						

Brake Disc

1.0 TFSI	85	07/16→10/20	←	+PR 1ZE / 1ZP		**24.0125-0145.1**	**425145**	Ø 288 Brake Disc Thickness [mm] 25 Minimum thickness [mm] 22 Vented + S
1.2 TFSI	81	05/14→						
1.4 TFSI	90 - 103	05/13→						
1.4 TSI	110	05/14→10/20	←	+PR 1ZA / 1ZD		**24.0125-0158.1**	**425158**	Ø 312 Brake Disc Thickness [mm] 25 Minimum thickness [mm] 22 Vented + S
1.5 TFSI	110	05/17→10/18						
1.6 TDI	77 - 85	09/13→						
1.6 TDI quattro	81	05/15→						
1.8 TFSI	132	05/13→				**24.0325-0158.1**	**525158**	Ø 312 Brake Disc Thickness [mm] 25 Minimum thickness [mm] 22 Vented + S
1.8 TFSI quattro	132	11/13→						
2.0 TDI	100 - 135	05/13→						
2.0 TDI quattro	110 - 135	10/13→10/20	←	+PR 1LB		**24.0130-0225.1**	**430225**	Ø 340 Brake Disc Thickness [mm] 30 Minimum thickness [mm] 27 Vented + S
2.0 TFSI	140	05/16→10/20						
2.0 TFSI quattro	140	05/16→10/20						
35 TDI	110	07/18→10/20						
40 TDI quattro	135	07/18→07/19	→	+PR 1KE / 1KR		**24.0110-0356.1**	**410356**	Ø 272 Brake Disc Thickness [mm] 9.7 Minimum thickness [mm] 8 + S
40 TFSI quattro	140	07/18→10/20						
			→	+PR 2ED; + eFSB		**24.0112-0210.1**	**412210**	Ø 300 Brake Disc Thickness [mm] 12 Minimum thickness [mm] 10 + S
			→	+PR 1KJ / 1KY / 1KZ; + eFSB		**24.0122-0219.1**	**422219**	Ø 310 Brake Disc Thickness [mm] 22 Minimum thickness [mm] 20 Vented
1.2 TFSI	77	10/13→	←	+PR 1ZE / 1ZP		**24.0125-0145.1**	**425145**	Ø 288 Brake Disc Thickness [mm] 25 Minimum thickness [mm] 22 Vented + S
1.8 TFSI	125	11/13→10/20						
2.0 TDI	81 - 105	05/13→10/20						
2.0 TFSI	162	11/15→10/20	←	+PR 1ZA / 1ZD		**24.0125-0158.1**	**425158**	Ø 312 Brake Disc Thickness [mm] 25 Minimum thickness [mm] 22 Vented + S
30 TDI	85	07/18→10/20						
30 TFSI	85	07/18→10/20						
35 TFSI	110	10/18→10/20						
40 TFSI	140	07/18→10/20	←	+PR 1LB		**24.0130-0225.1**	**430225**	Ø 340 Brake Disc Thickness [mm] 30 Minimum thickness [mm] 27 Vented + S
			→	+PR 1KE / 1KR		**24.0110-0356.1**	**410356**	Ø 272 Brake Disc Thickness [mm] 9.7 Minimum thickness [mm] 8 + S
			→	+PR 2ED; + eFSB		**24.0112-0210.1**	**412210**	Ø 300 Brake Disc Thickness [mm] 12 Minimum thickness [mm] 10 + S
			→	+PR 1KJ / 1KY / 1KZ; + eFSB		**24.0122-0219.1**	**422219**	Ø 310 Brake Disc Thickness [mm] 22 Minimum thickness [mm] 20 Vented
RS3 quattro	294	04/17→10/20	←	+PR 1ZE / 1ZP		**24.0125-0145.1**	**425145**	Ø 288 Brake Disc Thickness [mm] 25 Minimum thickness [mm] 22 Vented + S
			←	+PR 1ZA / 1ZD		**24.0125-0158.1**	**425158**	Ø 312 Brake Disc Thickness [mm] 25 Minimum thickness [mm] 22 Vented + S
						24.0325-0158.1	**525158**	Ø 312 Brake Disc Thickness [mm] 25 Minimum thickness [mm] 22 Vented + S

© 2022 Continental Aftermarket & Services GmbH

	kW				! #		
AUDI - A3 Limousine (8VS, 8VM) 05/13→							
Brake Disc							
RS3 quattro	294	04/17→10/20	←	+PR 1LH / 1LU		**24.0130-0225.1** **430225**	Ø 340 Brake Disc Thickness [mm] 30 Minimum thickness [mm] 27 Vented + S
			→	+PR 1KE / 1KR		**24.0110-0356.1** **410356**	Ø 272 Brake Disc Thickness [mm] 9.7 Minimum thickness [mm] 8 + S
			→	+PR 2ED; + eFSB		**24.0112-0210.1** **412210**	Ø 300 Brake Disc Thickness [mm] 12 Minimum thickness [mm] 10 + S
			→	+PR 1KJ / 1KY / 1KZ; + eFSB		**24.0122-0219.1** **422219**	Ø 310 Brake Disc Thickness [mm] 22 Minimum thickness [mm] 20 Vented
S3 quattro	206 - 221	10/13→	←	+PR 1ZE / 1ZP		**24.0125-0145.1** **425145**	Ø 288 Brake Disc Thickness [mm] 25 Minimum thickness [mm] 22 Vented + S
			←	+PR 1ZA / 1ZD		**24.0125-0158.1** **425158**	Ø 312 Brake Disc Thickness [mm] 25 Minimum thickness [mm] 22 Vented + S
						24.0325-0158.1 **525158**	Ø 312 Brake Disc Thickness [mm] 25 Minimum thickness [mm] 22 Vented + S
			←	+PR 1LB / 1LC / 1LJ		**24.0130-0225.1** **430225**	Ø 340 Brake Disc Thickness [mm] 30 Minimum thickness [mm] 27 Vented + S
			→	+PR 1KE / 1KR		**24.0110-0356.1** **410356**	Ø 272 Brake Disc Thickness [mm] 9.7 Minimum thickness [mm] 8 + S
			→	+PR 2ED; + eFSB		**24.0112-0210.1** **412210**	Ø 300 Brake Disc Thickness [mm] 12 Minimum thickness [mm] 10 + S
			→	+PR 1KJ / 1KY / 1KZ; + eFSB		**24.0122-0219.1** **422219**	Ø 310 Brake Disc Thickness [mm] 22 Minimum thickness [mm] 20 Vented
S3 quattro	215	05/14→10/20	←	+PR 1ZE / 1ZP		**24.0125-0145.1** **425145**	Ø 288 Brake Disc Thickness [mm] 25 Minimum thickness [mm] 22 Vented + S
			←	+PR 1ZA / 1ZD		**24.0125-0158.1** **425158**	Ø 312 Brake Disc Thickness [mm] 25 Minimum thickness [mm] 22 Vented + S
			←	+PR 1LB / 1LC / 1LJ		**24.0130-0225.1** **430225**	Ø 340 Brake Disc Thickness [mm] 30 Minimum thickness [mm] 27 Vented + S
			→	+PR 1KE / 1KR		**24.0110-0356.1** **410356**	Ø 272 Brake Disc Thickness [mm] 9.7 Minimum thickness [mm] 8 + S
			→	+PR 2ED; + eFSB		**24.0112-0210.1** **412210**	Ø 300 Brake Disc Thickness [mm] 12 Minimum thickness [mm] 10 + S
			→	+PR 1KJ / 1KY / 1KZ; + eFSB		**24.0122-0219.1** **422219**	Ø 310 Brake Disc Thickness [mm] 22 Minimum thickness [mm] 20 Vented
S3 quattro	228	06/16→10/20	←	+PR 1ZE / 1ZP		**24.0125-0145.1** **425145**	Ø 288 Brake Disc Thickness [mm] 25 Minimum thickness [mm] 22 Vented + S
			←	+PR 1ZA / 1ZD		**24.0125-0158.1** **425158**	Ø 312 Brake Disc Thickness [mm] 25 Minimum thickness [mm] 22 Vented + S
						24.0325-0158.1 **525158**	Ø 312 Brake Disc Thickness [mm] 25 Minimum thickness [mm] 22 Vented + S

© 2022 Continental Aftermarket & Services GmbH

AUDI - A3 Limousine (8VS, 8VM) 05/13→

	kW				! #			
Brake Disc								
S3 quattro	228	06/16→10/20	←	+PR 1LB / 1LC / 1LJ		**24.0130-0225.1**	**430225**	Ø 340 Brake Disc Thickness [mm] 30 Minimum thickness [mm] 27 Vented + S
			→	+PR 2ED; + eFSB		**24.0112-0210.1**	**412210**	Ø 300 Brake Disc Thickness [mm] 12 Minimum thickness [mm] 10 + S
			→	+PR 1KJ / 1KY / 1KZ; + eFSB		**24.0122-0219.1**	**422219**	Ø 310 Brake Disc Thickness [mm] 22 Minimum thickness [mm] 20 Vented
Sensor, wheel speed								
1.0 TFSI 1.2 TFSI 1.4 TFSI 1.4 TSI 1.5 TFSI 1.6 TDI 1.8 TFSI 2.0 TDI 2.0 TFSI 30 TDI 30 TFSI	85 77 - 81 90 - 103 110 110 77 - 85 125 - 132 81 - 135 140 85 85	07/16→10/20 10/13→ 05/13→ 05/14→10/20 05/17→10/18 09/13→ 05/13→ 05/13→ 05/16→10/20 07/18→10/20 07/18→10/20	←			**24.0711-5273.3**	**360303**	
			←			**24.0711-5274.3**	**360304**	
			→	for cruise control system	2	**24.0711-6337.3**	**360390**	
			→	for vehicles with parking assistant system	2	**24.0711-6337.3**	**360390**	
1.6 TDI quattro 1.8 TFSI quattro 2.0 TDI quattro 2.0 TFSI quattro S3 quattro	81 132 110 - 135 140 206 - 228	05/15→ 11/13→ 10/13→10/20 05/16→10/20 10/13→	←			**24.0711-5273.3**	**360303**	
			←			**24.0711-5274.3**	**360304**	
			→	for vehicles with parking assistant system;		**24.0711-5401.3**	**360330**	
			→	for cruise control system;		**24.0711-5401.3**	**360330**	
			→	for cruise control system;		**24.0711-5402.3**	**360331**	
			→	for vehicles with parking assistant system;		**24.0711-5402.3**	**360331**	
RS3 quattro	294	04/17→10/20	←			**24.0711-5273.3**	**360303**	
			←			**24.0711-5274.3**	**360304**	
			→			**24.0711-5401.3**	**360330**	
			→			**24.0711-5402.3**	**360331**	
Slave Cylinder, clutch								
1.0 TFSI 1.2 TFSI 1.4 TFSI 1.4 TSI 1.5 TFSI 1.6 TDI 1.6 TDI quattro 1.8 TFSI 1.8 TFSI quattro 2.0 TDI 2.0 TDI quattro 2.0 TFSI 2.0 TFSI quattro 30 TDI 30 TFSI 35 TDI 35 TFSI 40 TDI quattro 40 TFSI 40 TFSI quattro RS3 quattro S3 quattro	85 77 - 81 90 - 103 110 110 77 - 85 81 125 - 132 132 81 - 135 110 - 135 140 - 162 140 85 85 110 110 135 140 140 294 206 - 228	07/16→10/20 10/13→ 05/13→ 05/14→10/20 05/17→10/18 09/13→ 05/15→ 05/13→ 11/13→ 05/13→ 10/13→10/20 11/15→10/20 05/16→10/20 07/18→10/20 07/18→10/20 07/18→10/20 10/18→10/20 07/18→07/19 07/18→10/20 07/18→10/20 04/17→10/20 10/13→		+PR 0EC		**24.2519-1706.3**	**040096**	Ø 19
Control Element, parking brake caliper								
1.0 TFSI	85	07/16→10/20	→	+PR 1KE / 1KR / 1KZ;		**11.9282-1001.3**	**250159**	ATE

	kW				! #			
AUDI - A3 Limousine (8VS, 8VM) 05/13→								
Control Element, parking brake caliper								
1.2 TFSI	77 - 81	10/13→	➡	+PR 1KE / 1KR / 1KZ;		**11.9282-1002.3**	**250160**	ATE
1.4 TFSI	90 - 103	05/13→						
1.4 TSI	110	05/14→10/20						
1.5 TFSI	110	05/17→10/18						
1.6 TDI	77 - 85	09/13→						
1.6 TDI quattro	81	05/15→						
1.8 TFSI	125 - 132	05/13→						
1.8 TFSI quattro	132	11/13→						
2.0 TDI	81 - 135	05/13→						
2.0 TDI quattro	110 - 135	10/13→10/20						
2.0 TFSI	140 - 162	11/15→10/20						
2.0 TFSI quattro	140	05/16→10/20						
30 TDI	85	07/18→10/20						
30 TFSI	85	07/18→10/20						
35 TDI	110	07/18→10/20						
35 TFSI	110	10/18→10/20						
40 TDI quattro	135	07/18→07/19						
40 TFSI	140	07/18→10/20						
40 TFSI quattro	140	07/18→10/20						
RS3 quattro	294	04/17→10/20						
S3 quattro	206 - 228	10/13→						
AUDI - A3 Limousine (8YS) 03/20→								
Brake Caliper								
RS3 quattro	294	07/21→	➡	+PR 1KX;		**24.6242-7017.5**	**241185**	ATE without holder + eFSB
			➡	+PR 1KX;		**24.6242-7018.5**	**241186**	ATE without holder + eFSB
Brake Pad Set, disc brake								
30 TDI	85	06/20→	⬅	+PR 1LC / 1LJ / 1LG		**13.0460-2617.2**	**602617**	TRW + WK
30 TFSI	81	06/20→				**13.0470-2617.2**	**LD2617**	TRW + WK Ceramic
30 TFSI Mild Hybrid	81	06/20→						
35 TDI	110	04/20→	⬅	+PR 1ZK / 1ZL		**13.0460-2785.2**	**602785**	TRW 25683 20,4 + WE / + WK
35 TFSI	110	04/20→				**13.0470-2785.2**	**LD2785**	TRW 25683 20,4 + WE / + WK Ceramic
35 TFSI Mild Hybrid	110	04/20→						
40 TDI quattro	147	12/20→						
40 TFSI quattro	140	07/21→						
S3 quattro	228	06/20→	⬅	+PR 1LC / 1LJ / 1LG		**13.0460-2617.2**	**602617**	TRW + WK
			⬅	+PR 1ZK / 1ZL		**13.0460-2785.2**	**602785**	TRW 25683 20,4 + WE / + WK
Warning Contact, brake pad wear								
30 TDI	85	06/20→	⬅		1	**24.8190-0065.2**	**620065**	
30 TFSI	81	06/20→						
30 TFSI Mild Hybrid	81	06/20→						
35 TDI	110	04/20→						
35 TFSI	110	04/20→						
35 TFSI Mild Hybrid	110	04/20→						
40 TDI quattro	147	12/20→						
40 TFSI quattro	140	07/21→						
S3 quattro	228	06/20→						
Brake Disc								
30 TDI	85	06/20→	⬅	+PR 1ZE		**24.0125-0145.1**	**425145**	Ø 288 Brake Disc Thickness [mm] 25 Minimum thickness [mm] 22 Vented + S
30 TFSI	81	06/20→						
30 TFSI Mild Hybrid	81	06/20→						
35 TDI	110	04/20→						
35 TFSI	110	04/20→						
35 TFSI Mild Hybrid	110	04/20→	⬅	+PR 1ZK / 1ZL / 1ZU		**24.0125-0158.1**	**425158**	Ø 312 Brake Disc Thickness [mm] 25 Minimum thickness [mm] 22 Vented + S
40 TDI quattro	147	12/20→						
40 TFSI quattro	140	07/21→						
S3 quattro	228	06/20→						
			⬅	+PR 1LC / 1LJ / 1LG		**24.0130-0225.1**	**430225**	Ø 340 Brake Disc Thickness [mm] 30 Minimum thickness [mm] 27 Vented + S
			➡	+PR 1KE / 2EC / 2EJ		**24.0110-0356.1**	**410356**	Ø 272 Brake Disc Thickness [mm] 9.7 Minimum thickness [mm] 8 + S
			➡	+PR 1KD / 1KF / 1KI / 1KJ / 1KK / 1KY		**24.0122-0219.1**	**422219**	Ø 310 Brake Disc Thickness [mm] 22 Minimum thickness [mm] 20 Vented

© 2022 Continental Aftermarket & Services GmbH

	kW				! #			
AUDI - A3 Limousine (8YS) 03/20→								
Brake Disc								
RS3 quattro	294	07/21→	➡	+PR 1KX / 2EE		**24.0122-0219.1**	**422219**	Ø 310 Brake Disc Thickness [mm] 22 Minimum thickness [mm] 20 Vented
Sensor, wheel speed								
30 TDI 30 TFSI 30 TFSI Mild Hybrid 35 TDI 35 TFSI 35 TFSI Mild Hybrid 40 TDI quattro 40 TFSI quattro S3 quattro	85 81 81 110 110 110 147 140 228	06/20→ 06/20→ 06/20→ 04/20→ 04/20→ 04/20→ 12/20→ 07/21→ 06/20→	⬅			**24.0711-5273.3**	**360303**	
			⬅			**24.0711-5274.3**	**360304**	
			➡		2	**24.0711-6337.3**	**360390**	
RS3 quattro	294	07/21→	⬅			**24.0711-5273.3**	**360303**	
			⬅			**24.0711-5274.3**	**360304**	
			➡			**24.0711-5401.3**	**360330**	
			➡			**24.0711-5402.3**	**360331**	
Control Element, parking brake caliper								
RS3 quattro	294	07/21→	➡			**11.9282-1001.3**	**250159**	ATE
			➡			**11.9282-1002.3**	**250160**	ATE
AUDI - A3 Sportback (8PA) 09/04→12/15								
Guide Bolt, brake caliper								
1.2 TSI 1.4 TFSI 1.6 1.6 E-Power 1.6 FSI 1.6 TDI 1.8 TFSI quattro 1.9 TDI 2.0 FSI 2.0 TDI 2.0 TDI 16V 2.0 TDI 16V quattro 2.0 TDI quattro 2.0 TFSI 2.0 TFSI quattro 3.2 V6 quattro	77 92 75 75 85 66 - 77 118 77 110 100 - 125 103 103 103 - 125 147 147 184	04/10→03/13 09/07→03/13 09/04→03/13 01/11→03/13 09/04→09/07 05/09→03/13 07/08→03/13 09/04→05/10 09/04→06/08 09/04→03/13 09/04→03/13 11/05→03/13 01/06→03/13 09/04→03/13 09/04→03/13 09/04→05/09		+PR 1ZD / 1LJ / 1ZA	2	**11.8171-0008.1**	**990049**	ATE
				+PR 1ZE / 1ZP	2	**11.8171-0008.1**	**990049**	ATE
				+PR 1LK	2	**11.8171-0008.1**	**990049**	ATE
1.8 TFSI	118	11/06→03/13		01/07→; +PR 1ZE / 1ZP	2	**11.8171-0008.1**	**990049**	ATE
				01/07→; +PR 1ZD / 1LJ / 1ZA	2	**11.8171-0008.1**	**990049**	ATE
				01/07→; +PR 1LK	2	**11.8171-0008.1**	**990049**	ATE
2.0 TDI	104	01/10→03/13		+PR 1ZE / 1ZP	2	**11.8171-0008.1**	**990049**	ATE
S3 quattro	188 - 195	06/08→03/13		+PR 1ZK	2	**11.8171-0008.1**	**990049**	ATE
Brake Disc								
1.2 TSI 1.4 TFSI 1.6 1.6 E-Power 1.6 FSI 1.6 TDI 1.8 TFSI quattro 1.9 TDI 2.0 FSI 2.0 TDI 2.0 TDI 16V 2.0 TDI 16V quattro 2.0 TDI quattro 2.0 TFSI 2.0 TFSI quattro	77 92 75 75 85 66 - 77 118 77 110 103 - 125 103 103 103 - 125 147 147	04/10→03/13 09/07→03/13 09/04→03/13 01/11→03/13 09/04→09/07 05/09→03/13 07/08→03/13 09/04→05/10 09/04→06/08 06/05→03/13 09/04→03/13 11/05→03/13 01/06→03/13 09/04→03/13 09/04→03/13	⬅	+PR 1ZE / 1ZP		**24.0125-0145.1**	**425145**	Ø 288 Brake Disc Thickness [mm] 25 Minimum thickness [mm] 22 Vented + S
			⬅	+PR 1ZD / 1LJ / 1ZA		**24.0125-0158.1** **24.0325-0158.1**	**425158** **525158**	Ø 312 Brake Disc Thickness [mm] 25 Minimum thickness [mm] 22 Vented + S Ø 312 Brake Disc Thickness [mm] 25 Minimum thickness [mm] 22 Vented + S
			➡	+PR 1KS		**24.0110-0356.1**	**410356**	Ø 272 Brake Disc Thickness [mm] 9.7 Minimum thickness [mm] 8 + S
1.8 TFSI	118	11/06→03/13	⬅	01/07→; +PR 1ZE / 1ZP		**24.0125-0145.1**	**425145**	Ø 288 Brake Disc Thickness [mm] 25 Minimum thickness [mm] 22 Vented + S

	kW				! #			
AUDI - A3 Sportback (8PA) 09/04→12/15								
Brake Disc								
1.8 TFSI	118	11/06→03/13	←	01/07→; +PR 1ZD / 1LJ / 1ZA		**24.0125-0158.1**	**425158**	Ø 312 Brake Disc Thickness [mm] 25 Minimum thickness [mm] 22 Vented + S
						24.0325-0158.1	**525158**	Ø 312 Brake Disc Thickness [mm] 25 Minimum thickness [mm] 22 Vented + S
			→	01/07→; +PR 1KS		**24.0110-0356.1**	**410356**	Ø 272 Brake Disc Thickness [mm] 9.7 Minimum thickness [mm] 8 + S
2.0 TDI	100	09/04→03/13	←	+PR 1ZE / 1ZP		**24.0125-0145.1**	**425145**	Ø 288 Brake Disc Thickness [mm] 25 Minimum thickness [mm] 22 Vented + S
			←	+PR 1ZD / 1LJ / 1ZA		**24.0125-0158.1**	**425158**	Ø 312 Brake Disc Thickness [mm] 25 Minimum thickness [mm] 22 Vented + S
			→	+PR 1KS		**24.0110-0356.1**	**410356**	Ø 272 Brake Disc Thickness [mm] 9.7 Minimum thickness [mm] 8 + S
3.2 V6 quattro	184	09/04→05/09	←	+PR 1ZE / 1ZP		**24.0125-0145.1**	**425145**	Ø 288 Brake Disc Thickness [mm] 25 Minimum thickness [mm] 22 Vented + S
			←	+PR 1ZD / 1LJ / 1ZA		**24.0125-0158.1**	**425158**	Ø 312 Brake Disc Thickness [mm] 25 Minimum thickness [mm] 22 Vented + S
						24.0325-0158.1	**525158**	Ø 312 Brake Disc Thickness [mm] 25 Minimum thickness [mm] 22 Vented + S
			→	+PR 1KS		**24.0110-0356.1**	**410356**	Ø 272 Brake Disc Thickness [mm] 9.7 Minimum thickness [mm] 8 + S
			→	+PR 2EA		**24.0122-0219.1**	**422219**	Ø 310 Brake Disc Thickness [mm] 22 Minimum thickness [mm] 20 Vented
RS3 quattro	250	01/11→12/12	→	04/11→		**24.0122-0219.1**	**422219**	Ø 310 Brake Disc Thickness [mm] 22 Minimum thickness [mm] 20 Vented
S3 quattro	188 - 195	06/08→03/13	→	+PR 1KW		**24.0122-0219.1**	**422219**	Ø 310 Brake Disc Thickness [mm] 22 Minimum thickness [mm] 20 Vented
Slave Cylinder, clutch								
1.2 TSI 1.4 TFSI 1.6 1.6 E-Power 1.6 FSI 1.6 TDI 1.8 TFSI quattro 1.9 TDI 2.0 FSI 2.0 TDI 2.0 TDI 16V 2.0 TDI 16V quattro 2.0 TDI quattro 2.0 TFSI 2.0 TFSI quattro 3.2 V6 quattro S3 quattro	77 92 75 75 85 66 - 77 118 77 110 100 - 125 103 103 103 - 125 147 147 184 188 - 195	04/10→03/13 09/07→03/13 09/04→03/13 01/11→03/13 09/04→09/07 05/09→03/13 07/08→03/13 09/04→05/10 09/04→06/08 09/04→03/13 09/04→03/13 11/05→03/13 01/06→03/13 09/04→03/13 09/04→03/13 09/04→05/09 06/08→03/13		6-Speed Manual Transmission		**24.2519-1706.3**	**040096**	Ø 19
1.8 TFSI	118	11/06→03/13		01/07→; 6-Speed Manual Transmission		**24.2519-1706.3**	**040096**	Ø 19

© 2022 Continental Aftermarket & Services GmbH

AUDI - A3 Sportback (8VA, 8VF) 09/12→

Brake Master Cylinder

	kW				! #			
1.0 TFSI	85	07/16→10/20		for left-hand drive vehicles		**24.4123-1719.3**	**011017**	TRW Ø 23.8 without brake fluid reservoir
1.2 TFSI	77 - 81	05/13→						
1.4 TFSI	90 - 103	09/12→						
1.4 TFSI e-tron	110 - 150	05/14→10/20						
1.4 TFSI g-tron	81	11/13→10/20						
1.4 TSI	110	05/14→10/20						
1.5 TFSI	110	05/17→10/18						
1.6 TDI	77 - 85	10/12→						
1.6 TDI quattro	81	05/15→08/16						
1.8 TFSI	132	09/12→						
1.8 TFSI quattro	132	05/13→						
2.0 TDI	81 - 135	09/12→10/20						
2.0 TDI quattro	110 - 135	02/13→10/20						
2.0 TFSI	140	05/16→10/20						
2.0 TFSI quattro	140	05/16→10/20						
30 g-tron	96	11/18→10/20						
30 TDI	85	07/18→10/20						
30 TFSI	85	07/18→10/20						
35 TDI	110	07/18→10/20						
35 TFSI	110	10/18→10/20						
40 TDI quattro	135	07/18→10/20						
40 TFSI	140	07/18→10/20						
40 TFSI quattro	140	07/18→10/20						
RS3 quattro	270 - 294	03/15→						
S3 quattro	206 - 228	11/12→						

Brake Caliper

	kW				! #			
1.0 TFSI	85	07/16→10/20	←	+PR 1ZA / 1ZD;		**24.3571-1801.5**	**241387**	without holder
1.2 TFSI	77 - 81	05/13→	←	+PR 1ZA / 1ZD;		**24.3571-1802.5**	**241388**	without holder
1.4 TFSI	90 - 103	09/12→	←	+PR 1LB;		**24.3601-1727.5**	**240786**	TRW without holder
1.4 TFSI e-tron	110 - 150	05/14→10/20	←	+PR 1LB;		**24.3601-1728.5**	**240787**	TRW without holder
1.4 TFSI g-tron	81	11/13→10/20	→	+PR 1KE / 1KR; + eFSB;		**24.6238-7023.5**	**241241**	ATE without holder + eFSB
1.4 TSI	110	05/14→10/20				**24.6238-7047.5**	**241181**	ATE without holder + eFSB
1.5 TFSI	110	05/17→10/18	→	+PR 1KE / 1KR; + eFSB;		**24.6238-7024.5**	**241242**	ATE without holder + eFSB
1.6 TDI	77 - 85	10/12→				**24.6238-7048.5**	**241182**	ATE without holder + eFSB
1.6 TDI quattro	81	05/15→08/16	→	+PR 1KZ;		**24.6242-7001.5**	**241335**	ATE + EMot / without holder + eFSB
1.8 TFSI	132	09/12→						
1.8 TFSI quattro	132	05/13→	→	+PR 1KZ;		**24.6242-7002.5**	**241336**	ATE + EMot / without holder + eFSB
2.0 TDI	81 - 135	09/12→10/20						
2.0 TDI quattro	110 - 135	02/13→10/20	→	+PR 1KJ; + eFSB;		**24.6242-7017.5**	**241185**	ATE without holder + eFSB
2.0 TFSI	140	05/16→10/20	→	+PR 1KJ; + eFSB;		**24.6242-7018.5**	**241186**	ATE without holder + eFSB
2.0 TFSI quattro	140	05/16→10/20						
30 g-tron	96	11/18→10/20						
30 TDI	85	07/18→10/20						
30 TFSI	85	07/18→10/20						
35 TDI	110	07/18→10/20						
35 TFSI	110	10/18→10/20						
40 TDI quattro	135	07/18→10/20						
40 TFSI	140	07/18→10/20						
40 TFSI quattro	140	07/18→10/20						
S3 quattro	206 - 228	11/12→						
RS3 quattro	270 - 294	03/15→	→	+PR 1KX; + eFSB;		**24.6242-7017.5**	**241185**	ATE without holder + eFSB
			→	+PR 1KX; + eFSB;		**24.6242-7018.5**	**241186**	ATE without holder + eFSB

Guide Bolt, brake caliper

	kW				! #			
1.0 TFSI	85	07/16→10/20	→	+PR 1KE / 1KJ / 1KR / 1KY	2	**11.8171-0008.1**	**990049**	ATE
1.2 TFSI	77 - 81	05/13→						
1.4 TFSI	90 - 103	09/12→						
1.4 TFSI e-tron	110 - 150	05/14→10/20						
1.4 TFSI g-tron	81	11/13→10/20						
1.4 TSI	110	05/14→10/20						
1.5 TFSI	110	05/17→10/18						
1.6 TDI	77 - 85	10/12→						

AUDI - A3 Sportback (8VA, 8VF) 09/12→

Guide Bolt, brake caliper

	kW				! #			
1.6 TDI quattro	81	05/15→08/16	➡	+PR 1KE / 1KJ / 1KR / 1KY	2	**11.8171-0008.1**	**990049**	ATE
1.8 TFSI	132	09/12→						
1.8 TFSI quattro	132	05/13→						
2.0 TDI	81 - 135	09/12→10/20						
2.0 TDI quattro	110 - 135	02/13→10/20						
2.0 TFSI	140	05/16→10/20						
2.0 TFSI quattro	140	05/16→10/20						
30 g-tron	96	11/18→10/20						
30 TDI	85	07/18→10/20						
30 TFSI	85	07/18→10/20						
35 TDI	110	07/18→10/20						
35 TFSI	110	10/18→10/20						
40 TDI quattro	135	07/18→10/20						
40 TFSI	140	07/18→10/20						
40 TFSI quattro	140	07/18→10/20						
RS3 quattro	270 - 294	03/15→						
S3 quattro	206 - 228	11/12→						

Brake Pad Set, disc brake

	kW				! #			
1.0 TFSI	85	07/16→10/20	⬅	+PR 1LB		**13.0460-2617.2**	**602617**	TRW + WK
1.2 TFSI	77 - 81	05/13→				**13.0470-2617.2**	**LD2617**	TRW + WK Ceramic
1.4 TFSI	90 - 103	09/12→	⬅	+PR 1ZA / 1ZD / 1ZE / 1ZP		**13.0460-2785.2**	**602785**	TRW 25683 20,4 + WE / + WK
						13.0470-2785.2	**LD2785**	TRW 25683 20,4 + WE / + WK Ceramic
1.4 TFSI e-tron	110 - 150	05/14→10/20						
1.4 TFSI g-tron	81	11/13→10/20	➡	+PR 1KE / 1KR; + eFSB		**13.0460-7293.2**	**607293**	ATE 25008 16,3 - WE / - WK
1.4 TSI	110	05/14→10/20	➡	+PR 1KJ / 1KY / 1KZ / 2ED; + eFSB		**13.0460-7294.2**	**607294**	ATE 25009 16,4 - WE / - WK
1.5 TFSI	110	05/17→10/18				**13.0470-7294.2**	**LD7294**	ATE 25009 16,4 - WE / - WK Ceramic
1.6 TDI	77 - 85	10/12→						
1.6 TDI quattro	81	05/15→08/16	➡	+PR 1KE; + eFSB		**13.0470-7293.2**	**LD7293**	ATE 25008 16,3 - WE / - WK Ceramic
1.8 TFSI	132	09/12→						
1.8 TFSI quattro	132	05/13→						
2.0 TDI	81 - 135	09/12→10/20						
2.0 TDI quattro	110 - 135	02/13→10/20						
2.0 TFSI	140	05/16→10/20						
2.0 TFSI quattro	140	05/16→10/20						
30 TDI	85	07/18→10/20						
30 TFSI	85	07/18→10/20						
35 TDI	110	07/18→10/20						
35 TFSI	110	10/18→10/20						
40 TDI quattro	135	07/18→10/20						
40 TFSI	140	07/18→10/20						
40 TFSI quattro	140	07/18→10/20						
30 g-tron	96	11/18→10/20	⬅	+PR 1LB		**13.0460-2617.2**	**602617**	TRW + WK
						13.0470-2617.2	**LD2617**	TRW + WK Ceramic
			⬅	+PR 1ZA / 1ZD / 1ZE / 1ZP		**13.0460-2785.2**	**602785**	TRW 25683 20,4 + WE / + WK
						13.0470-2785.2	**LD2785**	TRW 25683 20,4 + WE / + WK Ceramic
			➡	+PR 1KE / 1KR; + eFSB		**13.0460-7293.2**	**607293**	ATE 25008 16,3 - WE / - WK
			➡	+PR 1KJ / 1KY / 1KZ / 2ED		**13.0460-7294.2**	**607294**	ATE 25009 16,4 - WE / - WK
						13.0470-7294.2	**LD7294**	ATE 25009 16,4 - WE / - WK Ceramic
			➡	+PR 1KE; + eFSB		**13.0470-7293.2**	**LD7293**	ATE 25008 16,3 - WE / - WK Ceramic
S3 quattro	206 - 221	11/12→	⬅	+PR 1LB / 1LC / 1LJ		**13.0460-2617.2**	**602617**	TRW + WK
						13.0470-2617.2	**LD2617**	TRW + WK Ceramic
			⬅	+PR 1ZA / 1ZD / 1ZE / 1ZP		**13.0460-2785.2**	**602785**	TRW 25683 20,4 + WE / + WK
						13.0470-2785.2	**LD2785**	TRW 25683 20,4 + WE / + WK Ceramic
			➡	+PR 1KE / 1KR; + eFSB		**13.0460-7293.2**	**607293**	ATE 25008 16,3 - WE / - WK
			➡	+PR 1KJ / 1KY / 1KZ / 2ED; + eFSB		**13.0460-7294.2**	**607294**	ATE 25009 16,4 - WE / - WK
						13.0470-7294.2	**LD7294**	ATE 25009 16,4 - WE / - WK Ceramic
			➡	+PR 1KE; + eFSB		**13.0470-7293.2**	**LD7293**	ATE 25008 16,3 - WE / - WK Ceramic
S3 quattro	228	06/16→10/20	⬅	+PR 1LB / 1LC / 1LJ		**13.0460-2617.2**	**602617**	TRW + WK
			⬅	+PR 1ZA / 1ZD / 1ZE / 1ZP		**13.0460-2785.2**	**602785**	TRW 25683 20,4 + WE / + WK
			➡	+PR 1KE / 1KR; + eFSB		**13.0460-7293.2**	**607293**	ATE 25008 16,3 - WE / - WK

© 2022 Continental Aftermarket & Services GmbH

AUDI - A3 Sportback (8VA, 8VF) 09/12→

	kW				! #			
Brake Pad Set, disc brake								
S3 quattro	228	06/16→10/20	➡	+PR 1KJ / 1KY / 1KZ / 2ED; + eFSB		**13.0460-7294.2**	**607294**	ATE 25009 16,4 - WE / - WK
Warning Contact, brake pad wear								
1.0 TFSI	85	07/16→10/20	⬅	+PR 1ZA / 1ZD / 1ZE / 1ZP	1	**24.8190-0065.2**	**620065**	
1.2 TFSI	77 - 81	05/13→						
1.4 TFSI	90 - 103	09/12→						
1.4 TFSI e-tron	110 - 150	05/14→10/20						
1.4 TFSI g-tron	81	11/13→10/20						
1.4 TSI	110	05/14→10/20						
1.5 TFSI	110	05/17→10/18						
1.6 TDI	77 - 85	10/12→						
1.6 TDI quattro	81	05/15→08/16						
1.8 TFSI	132	09/12→						
1.8 TFSI quattro	132	05/13→						
2.0 TDI	81 - 135	09/12→10/20						
2.0 TDI quattro	110 - 135	02/13→10/20						
2.0 TFSI	140	05/16→10/20						
2.0 TFSI quattro	140	05/16→10/20						
30 g-tron	96	11/18→10/20						
30 TDI	85	07/18→10/20						
30 TFSI	85	07/18→10/20						
35 TDI	110	07/18→10/20						
35 TFSI	110	10/18→10/20						
40 TDI quattro	135	07/18→10/20						
40 TFSI	140	07/18→10/20						
40 TFSI quattro	140	07/18→10/20						
RS3 quattro	270 - 294	03/15→						
S3 quattro	206 - 228	11/12→						
Brake Disc								
1.0 TFSI	85	07/16→10/20	⬅	+PR 1ZE / 1ZP		**24.0125-0145.1**	**425145**	Ø 288 Brake Disc Thickness [mm] 25 Minimum thickness [mm] 22 Vented + S
1.2 TFSI	77 - 81	05/13→						
1.4 TFSI	90 - 103	09/12→						
1.4 TFSI e-tron	110 - 150	05/14→10/20	⬅	+PR 1ZA / 1ZD		**24.0125-0158.1**	**425158**	Ø 312 Brake Disc Thickness [mm] 25 Minimum thickness [mm] 22 Vented + S
1.4 TFSI g-tron	81	11/13→10/20						
1.4 TSI	110	05/14→10/20						
1.5 TFSI	110	05/17→10/18				**24.0325-0158.1**	**525158**	Ø 312 Brake Disc Thickness [mm] 25 Minimum thickness [mm] 22 Vented + S
1.6 TDI	77 - 85	10/12→						
1.6 TDI quattro	81	05/15→08/16						
1.8 TFSI	132	09/12→	⬅	+PR 1LB		**24.0130-0225.1**	**430225**	Ø 340 Brake Disc Thickness [mm] 30 Minimum thickness [mm] 27 Vented + S
1.8 TFSI quattro	132	05/13→						
2.0 TDI	100 - 135	09/12→10/20						
2.0 TDI quattro	110 - 135	02/13→10/20	➡	+PR 1KE / 1KR		**24.0110-0356.1**	**410356**	Ø 272 Brake Disc Thickness [mm] 9.7 Minimum thickness [mm] 8 + S
2.0 TFSI	140	05/16→10/20						
2.0 TFSI quattro	140	05/16→10/20						
30 g-tron	96	11/18→10/20	➡	+PR 2ED; + eFSB		**24.0112-0210.1**	**412210**	Ø 300 Brake Disc Thickness [mm] 12 Minimum thickness [mm] 10 + S
35 TDI	110	07/18→10/20						
35 TFSI	110	10/18→10/20						
40 TDI quattro	135	07/18→10/20	➡	+PR 1KJ / 1KY / 1KZ; + eFSB		**24.0122-0219.1**	**422219**	Ø 310 Brake Disc Thickness [mm] 22 Minimum thickness [mm] 20 Vented
40 TFSI quattro	140	07/18→10/20						
2.0 TDI	81 - 105	03/13→10/20	⬅	+PR 1ZE / 1ZP		**24.0125-0145.1**	**425145**	Ø 288 Brake Disc Thickness [mm] 25 Minimum thickness [mm] 22 Vented + S
30 TDI	85	07/18→10/20						
30 TFSI	85	07/18→10/20						
40 TFSI	140	07/18→10/20	⬅	+PR 1ZA / 1ZD		**24.0125-0158.1**	**425158**	Ø 312 Brake Disc Thickness [mm] 25 Minimum thickness [mm] 22 Vented + S
			⬅	+PR 1LB		**24.0130-0225.1**	**430225**	Ø 340 Brake Disc Thickness [mm] 30 Minimum thickness [mm] 27 Vented + S
			➡	+PR 1KE / 1KR		**24.0110-0356.1**	**410356**	Ø 272 Brake Disc Thickness [mm] 9.7 Minimum thickness [mm] 8 + S

© 2022 Continental Aftermarket & Services GmbH

AUDI - A3 Sportback (8VA, 8VF) 09/12→

Brake Disc

	kW				! #			
2.0 TDI 30 TDI 30 TFSI 40 TFSI	81 - 105 85 85 140	03/13→10/20 07/18→10/20 07/18→10/20 07/18→10/20	→	+PR 2ED; + eFSB		**24.0112-0210.1**	**412210**	Ø 300 Brake Disc Thickness [mm] 12 Minimum thickness [mm] 10 + S
			→	+PR 1KJ / 1KY / 1KZ; + eFSB		**24.0122-0219.1**	**422219**	Ø 310 Brake Disc Thickness [mm] 22 Minimum thickness [mm] 20 Vented
RS3 quattro	270 - 294	03/15→	←	+PR 1LH / 1LU / 1LN / 1LL		**24.0130-0225.1**	**430225**	Ø 340 Brake Disc Thickness [mm] 30 Minimum thickness [mm] 27 Vented + S
			→	+PR 1KX / 2EE; + eFSB		**24.0122-0219.1**	**422219**	Ø 310 Brake Disc Thickness [mm] 22 Minimum thickness [mm] 20 Vented
S3 quattro	206 - 221	11/12→	←	+PR 1ZE / 1ZP		**24.0125-0145.1**	**425145**	Ø 288 Brake Disc Thickness [mm] 25 Minimum thickness [mm] 22 Vented + S
			←	+PR 1ZA / 1ZD		**24.0125-0158.1** **24.0325-0158.1**	**425158** **525158**	Ø 312 Brake Disc Thickness [mm] 25 Minimum thickness [mm] 22 Vented + S Ø 312 Brake Disc Thickness [mm] 25 Minimum thickness [mm] 22 Vented + S
			←	+PR 1LB / 1LC / 1LJ		**24.0130-0225.1**	**430225**	Ø 340 Brake Disc Thickness [mm] 30 Minimum thickness [mm] 27 Vented + S
			→	+PR 1KE / 1KR		**24.0110-0356.1**	**410356**	Ø 272 Brake Disc Thickness [mm] 9.7 Minimum thickness [mm] 8 + S
			→	+PR 2ED; + eFSB		**24.0112-0210.1**	**412210**	Ø 300 Brake Disc Thickness [mm] 12 Minimum thickness [mm] 10 + S
			→	+PR 1KJ / 1KY / 1KZ; + eFSB		**24.0122-0219.1**	**422219**	Ø 310 Brake Disc Thickness [mm] 22 Minimum thickness [mm] 20 Vented
S3 quattro	228	06/16→10/20	←	+PR 1ZE / 1ZP		**24.0125-0145.1**	**425145**	Ø 288 Brake Disc Thickness [mm] 25 Minimum thickness [mm] 22 Vented + S
			←	+PR 1ZA / 1ZD		**24.0125-0158.1** **24.0325-0158.1**	**425158** **525158**	Ø 312 Brake Disc Thickness [mm] 25 Minimum thickness [mm] 22 Vented + S Ø 312 Brake Disc Thickness [mm] 25 Minimum thickness [mm] 22 Vented + S
			←	+PR 1LB / 1LC / 1LJ		**24.0130-0225.1**	**430225**	Ø 340 Brake Disc Thickness [mm] 30 Minimum thickness [mm] 27 Vented + S
			→	+PR 2ED; + eFSB		**24.0112-0210.1**	**412210**	Ø 300 Brake Disc Thickness [mm] 12 Minimum thickness [mm] 10 + S
			→	+PR 1KJ / 1KY / 1KZ; + eFSB		**24.0122-0219.1**	**422219**	Ø 310 Brake Disc Thickness [mm] 22 Minimum thickness [mm] 20 Vented

Sensor, wheel speed

1.0 TFSI 1.2 TFSI	85 77 - 81	07/16→10/20 05/13→	←			**24.0711-5273.3**	**360303**	
			←			**24.0711-5274.3**	**360304**	
1.4 TFSI	90 - 103	09/12→	→	for cruise control system	2	**24.0711-6337.3**	**360390**	
1.4 TFSI e-tron 1.4 TSI 1.5 TFSI 1.6 TDI 1.8 TFSI	110 110 110 77 - 85 132	05/14→10/20 05/14→10/20 05/17→10/18 10/12→ 09/12→	→	for vehicles with parking assistant system	2	**24.0711-6337.3**	**360390**	

© 2022 Continental Aftermarket & Services GmbH

AUDI - A3 Sportback (8VA, 8VF) 09/12→

Sensor, wheel speed

	kW				! #			
2.0 TDI	81 - 135	09/12→10/20	←	◪		24.0711-5273.3	360303	
2.0 TFSI	140	05/16→10/20	←	◪		24.0711-5274.3	360304	
			→	for cruise control system	2	24.0711-6337.3	360390	
			→	for vehicles with parking assistant system	2	24.0711-6337.3	360390	
1.4 TFSI e-tron	150	05/14→10/20	←	◪		24.0711-5273.3	360303	
			←	◪		24.0711-5274.3	360304	
			→	for cruise control system	2	24.0711-6337.3	360390	
1.4 TFSI g-tron	81	11/13→10/20	←	02/14→; ◪		24.0711-5273.3	360303	
			←	02/14→; ◪		24.0711-5274.3	360304	
			→	02/14→; for cruise control system	2	24.0711-6337.3	360390	
			→	02/14→; for vehicles with parking assistant system	2	24.0711-6337.3	360390	
1.6 TDI quattro	81	05/15→08/16	←	◪		24.0711-5273.3	360303	
1.8 TFSI quattro	132	05/13→	←	◪		24.0711-5274.3	360304	
2.0 TDI quattro	110 - 135	02/13→10/20	→	for vehicles with parking assistant system; ◪		24.0711-5401.3	360330	
2.0 TFSI quattro	140	05/16→10/20						
RS3 quattro	270 - 294	03/15→	→	for cruise control system; ◪		24.0711-5401.3	360330	
S3 quattro	206 - 228	11/12→	→	for cruise control system; ◪		24.0711-5402.3	360331	
			→	for vehicles with parking assistant system; ◪		24.0711-5402.3	360331	

Slave Cylinder, clutch

1.0 TFSI	85	07/16→10/20		+PR 0EC		24.2519-1706.3	040096	Ø 19
1.2 TFSI	77 - 81	05/13→						
1.4 TFSI	90 - 103	09/12→						
1.4 TFSI e-tron	110 - 150	05/14→10/20						
1.4 TFSI g-tron	81	11/13→10/20						
1.4 TSI	110	05/14→10/20						
1.5 TFSI	110	05/17→10/18						
1.6 TDI	77 - 85	10/12→						
1.6 TDI quattro	81	05/15→08/16						
1.8 TFSI	132	09/12→						
1.8 TFSI quattro	132	05/13→						
2.0 TDI	81 - 135	09/12→10/20						
2.0 TDI quattro	110 - 135	02/13→10/20						
2.0 TFSI	140	05/16→10/20						
2.0 TFSI quattro	140	05/16→10/20						
30 g-tron	96	11/18→10/20						
30 TDI	85	07/18→10/20						
30 TFSI	85	07/18→10/20						
35 TDI	110	07/18→10/20						
35 TFSI	110	10/18→10/20						
40 TDI quattro	135	07/18→10/20						
40 TFSI	140	07/18→10/20						
40 TFSI quattro	140	07/18→10/20						
RS3 quattro	270 - 294	03/15→						
S3 quattro	206 - 228	11/12→						

Control Element, parking brake caliper

1.0 TFSI	85	07/16→10/20	→	+PR 1KE / 1KR / 1KZ; ◪		11.9282-1001.3	250159	ATE
1.2 TFSI	77 - 81	05/13→	→	+PR 1KE / 1KR / 1KZ; ◪		11.9282-1002.3	250160	ATE
1.4 TFSI	90 - 103	09/12→						
1.4 TFSI e-tron	110 - 150	05/14→10/20						
1.4 TFSI g-tron	81	11/13→10/20						
1.4 TSI	110	05/14→10/20						
1.5 TFSI	110	05/17→10/18						
1.6 TDI	77 - 85	10/12→						
1.6 TDI quattro	81	05/15→08/16						
1.8 TFSI	132	09/12→						
1.8 TFSI quattro	132	05/13→						
2.0 TDI	81 - 135	09/12→10/20						

	kW				! #			
AUDI - A3 Sportback (8VA, 8VF) 09/12→								
Control Element, parking brake caliper								
2.0 TDI quattro	110 - 135	02/13→10/20	➡	+PR 1KE / 1KR / 1KZ;		**11.9282-1001.3**	**250159**	ATE
2.0 TFSI 2.0 TFSI quattro 30 g-tron 30 TDI 30 TFSI 35 TDI 35 TFSI 40 TDI quattro 40 TFSI 40 TFSI quattro RS3 quattro S3 quattro	140 140 96 85 85 110 110 135 140 140 270 - 294 206 - 228	05/16→10/20 05/16→10/20 11/18→10/20 07/18→10/20 07/18→10/20 07/18→10/20 10/18→10/20 07/18→10/20 07/18→10/20 07/18→10/20 03/15→ 11/12→	➡	+PR 1KE / 1KR / 1KZ;		**11.9282-1002.3**	**250160**	ATE
AUDI - A3 Sportback (8YA) 11/19→								
Brake Caliper								
RS3 quattro	294	07/21→	➡	+PR 1KX;		**24.6242-7017.5**	**241185**	ATE without holder + eFSB
			➡	+PR 1KX;		**24.6242-7018.5**	**241186**	ATE without holder + eFSB
Brake Pad Set, disc brake								
30 g-tron 30 TDI 30 TFSI 30 TFSI Mild Hybrid 35 TDI 35 TFSI 35 TFSI Mild Hybrid 40 TDI quattro 40 TFSIe 40 TFSI quattro 45 TFSIe	96 85 81 81 110 110 110 147 110 140 110	07/20→ 11/19→ 06/20→ 06/20→ 11/19→ 11/19→ 04/20→ 12/20→ 06/20→ 07/21→ 07/21→	⬅	+PR 1LC / 1LJ / 1LG		**13.0460-2617.2** **13.0470-2617.2**	**602617** **LD2617**	TRW + WK TRW + WK Ceramic
			⬅	+PR 1ZK / 1ZL		**13.0460-2785.2** **13.0470-2785.2**	**602785** **LD2785**	TRW 25683 20,4 + WE / + WK TRW 25683 20,4 + WE / + WK Ceramic
S3 quattro	228	06/20→	⬅	+PR 1LC / 1LJ / 1LG		**13.0460-2617.2**	**602617**	TRW + WK
			⬅	+PR 1ZK / 1ZL		**13.0460-2785.2**	**602785**	TRW 25683 20,4 + WE / + WK
Warning Contact, brake pad wear								
30 g-tron 30 TDI 30 TFSI 30 TFSI Mild Hybrid 35 TDI 35 TFSI 35 TFSI Mild Hybrid 40 TDI quattro 40 TFSIe 40 TFSI quattro 45 TFSIe S3 quattro	96 85 81 81 110 110 110 147 110 140 110 228	07/20→ 11/19→ 06/20→ 06/20→ 11/19→ 11/19→ 04/20→ 12/20→ 06/20→ 07/21→ 07/21→ 06/20→	⬅		1	**24.8190-0065.2**	**620065**	
Brake Disc								
30 g-tron 30 TDI 30 TFSI 30 TFSI Mild Hybrid 35 TDI 35 TFSI 35 TFSI Mild Hybrid 40 TDI quattro 40 TFSIe 40 TFSI quattro 45 TFSIe S3 quattro	96 85 81 81 110 110 110 147 110 140 110 228	07/20→ 11/19→ 06/20→ 06/20→ 11/19→ 11/19→ 04/20→ 12/20→ 06/20→ 07/21→ 07/21→ 06/20→	⬅	+PR 1ZE		**24.0125-0145.1**	**425145**	Ø 288 Brake Disc Thickness [mm] 25 Minimum thickness [mm] 22 Vented + S
			⬅	+PR 1ZK / 1ZL / 1ZU		**24.0125-0158.1**	**425158**	Ø 312 Brake Disc Thickness [mm] 25 Minimum thickness [mm] 22 Vented + S
			⬅	+PR 1LC / 1LJ / 1LG		**24.0130-0225.1**	**430225**	Ø 340 Brake Disc Thickness [mm] 30 Minimum thickness [mm] 27 Vented + S
			➡	+PR 1KE / 2EC / 2EJ		**24.0110-0356.1**	**410356**	Ø 272 Brake Disc Thickness [mm] 9.7 Minimum thickness [mm] 8 + S
			➡	+PR 1KD / 1KF / 1KI / 1KJ / 1KK / 1KY		**24.0122-0219.1**	**422219**	Ø 310 Brake Disc Thickness [mm] 22 Minimum thickness [mm] 20 Vented
RS3 quattro	294	07/21→	➡	+PR 1KX / 2EE		**24.0122-0219.1**	**422219**	Ø 310 Brake Disc Thickness [mm] 22 Minimum thickness [mm] 20 Vented

© 2022 Continental Aftermarket & Services GmbH

	kW				! #			
AUDI - A3 Sportback (8YA) 11/19→								
Sensor, wheel speed								
30 g-tron 30 TDI 30 TFSI 30 TFSI Mild Hybrid 35 TDI 35 TFSI 35 TFSI Mild Hybrid 40 TDI quattro 40 TFSIe 40 TFSI quattro 45 TFSIe S3 quattro	96 85 81 81 110 110 110 147 110 140 110 228	07/20→ 11/19→ 06/20→ 06/20→ 11/19→ 11/19→ 04/20→ 12/20→ 06/20→ 07/21→ 07/21→ 06/20→	←			**24.0711-5273.3**	**360303**	
			←			**24.0711-5274.3**	**360304**	
			→		2	**24.0711-6337.3**	**360390**	
RS3 quattro	294	07/21→	←			**24.0711-5273.3**	**360303**	
			←			**24.0711-5274.3**	**360304**	
			→			**24.0711-5401.3**	**360330**	
			→			**24.0711-5402.3**	**360331**	
Control Element, parking brake caliper								
RS3 quattro	294	07/21→	→			**11.9282-1001.3**	**250159**	ATE
			→			**11.9282-1002.3**	**250160**	ATE
AUDI - A4 Allroad B8 (8KH) 04/09→05/16								
Guide Bolt, brake caliper								
2.0 TDI quattro 2.0 TFSI quattro 3.0 TDI quattro	100 - 140 155 - 165 176 - 180	04/09→05/16 04/09→05/16 04/09→05/16		+PR 1LT	2	**11.8171-0008.1**	**990049**	ATE
2.0 TDI quattro	130	11/11→05/16		01/12→; +PR 1LT	2	**11.8171-0008.1**	**990049**	ATE
AUDI - A4 Allroad B9 (8WH, 8WJ) 01/16→								
Brake Caliper								
2.0 TDI quattro	100 - 140	01/16→	←	+PR 1LC;		**24.4426-7017.5**	**230165**	ATE
2.0 TFSI Mild Hybrid quattro	185	11/18→10/19	←	+PR 1LC;		**24.4426-7018.5**	**230166**	ATE
2.0 TFSI quattro	183 - 185	01/16→	←	+PR 1LE;		**24.4426-7019.5**	**230161**	ATE
			←	+PR 1LE;		**24.4426-7020.5**	**230162**	ATE
3.0 TDI quattro	160 - 210	01/16→10/19	←	+PR 1LD;		**24.4446-7002.5**	**230156**	ATE
40 TDI Mild Hybrid quattro	150	09/20→						
40 TDI quattro	140	01/20→						
45 TDI quattro	170	07/18→						
45 TFSI Mild Hybrid quattro	180 - 195	07/18→						
50 TDI Mild Hybrid quattro	210	08/20→						
50 TDI quattro	210	11/19→						
Guide Bolt, brake caliper								
3.0 TDI quattro	210	07/18→10/19		+PR 1LA / 1LB	2	**11.8171-0008.1**	**990049**	ATE
40 TDI Mild Hybrid quattro	150	09/20→						
40 TDI quattro	140	01/20→						
45 TDI quattro	170	07/18→						
45 TFSI Mild Hybrid quattro	195	08/20→						
50 TDI Mild Hybrid quattro	210	08/20→						
50 TDI quattro	210	11/19→						
AUDI - A4 B5 (8D2) 11/94→12/01								
Guide Bolt, brake caliper								
1.6	74 - 75	11/94→11/00	←	→ 8D-V-054061	2	**11.8171-0008.1**	**990049**	ATE
1.8	92	11/94→11/00						
1.8 quattro	85 - 92	01/95→11/00						
1.8	85	04/95→11/00	←	07/95→; → 8D-V-054061	2	**11.8171-0008.1**	**990049**	ATE
1.8 T	110	01/95→11/00	←	05/95→	2	**11.8171-0008.1**	**990049**	ATE
1.8 T	125 - 132	12/97→11/00	←		2	**11.8171-0008.1**	**990049**	ATE
1.8 T quattro	132	12/97→11/00						
1.9 TDI	85	03/00→11/00						

	kW				! #			
AUDI - A4 B5 (8D2) 11/94→12/01								
Guide Bolt, brake caliper								
1.9 TDI quattro	81 - 85	09/96→11/00	←		2	**11.8171-0008.1**	**990049**	ATE
2.4	120	08/97→11/00						
2.4 quattro	120	08/97→11/00						
2.5 TDI	110	09/97→11/00						
2.6	110	01/95→11/00						
2.6 quattro	110	01/95→11/00						
2.8	128 - 142	09/95→11/00						
2.8 quattro	140	09/99→10/00						
1.8 T quattro	110	01/95→11/00	←	02/95→	2	**11.8171-0008.1**	**990049**	ATE
1.9 TDI	81	10/95→11/00	←	02/96→	2	**11.8171-0008.1**	**990049**	ATE
2.4	121	03/97→11/00	←	08/97→	2	**11.8171-0008.1**	**990049**	ATE
			←	→ 07/97	2	**11.8171-0008.1**	**990049**	ATE
2.4 quattro	121	03/97→11/00	←	08/97→	2	**11.8171-0008.1**	**990049**	ATE
2.5 TDI quattro	110	09/97→11/00	←	11/97→	2	**11.8171-0008.1**	**990049**	ATE
2.8 quattro	128	01/95→07/97	←	→ 07/96	2	**11.8171-0008.1**	**990049**	ATE
2.8 quattro	142	10/96→08/01	←	→ 04/01	2	**11.8171-0008.1**	**990049**	ATE
AUDI - A4 B5 Avant (8D5) 11/94→12/02								
Guide Bolt, brake caliper								
1.6	74 - 75	11/94→09/01	←	→ 8D-V-054061	2	**11.8171-0008.1**	**990049**	ATE
1.8	85 - 92	07/95→09/01						
1.8 quattro	85 - 92	07/95→09/01						
1.8 T	110 - 132	03/96→09/01	←	→ 04/01	2	**11.8171-0008.1**	**990049**	ATE
1.8 T quattro	110 - 132	01/96→09/01						
1.9 TDI	81 - 85	02/96→09/01						
1.9 TDI quattro	81 - 85	09/96→09/01						
2.4	120	08/97→09/01						
2.4 quattro	120	08/97→09/01						
2.5 TDI	110	09/97→09/01						
2.6	110	02/96→09/01						
2.6 quattro	110	01/96→09/01						
2.8	142	10/96→09/01						
2.8 quattro	142	10/96→09/01						
2.4	121	03/97→09/01	←	08/97→ 04/01	2	**11.8171-0008.1**	**990049**	ATE
2.4 quattro	121	03/97→09/01						
2.5 TDI quattro	110	09/97→09/01	←	11/97→ 04/01	2	**11.8171-0008.1**	**990049**	ATE
2.8	128 - 140	03/96→09/00	←		2	**11.8171-0008.1**	**990049**	ATE
2.8 quattro	140	03/99→09/00						
2.8 quattro	128	01/96→09/96	←	→ 07/96	2	**11.8171-0008.1**	**990049**	ATE
RS4 quattro	280	05/00→09/01		06/00→ 04/01	2	**11.8171-0008.1**	**990049**	ATE
AUDI - A4 B6 (8E2) 11/00→12/05								
Guide Bolt, brake caliper								
1.6	75	11/00→12/04		12/00→; +PR 1LB / 1LE	2	**11.8171-0008.1**	**990049**	ATE
1.8 T	110	11/00→07/02		12/00→; +PR 1LF / 1LT	2	**11.8171-0008.1**	**990049**	ATE
1.8 T quattro	110	11/00→07/02						
1.9 TDI	96	11/00→12/04		12/00→; +PR 1LA / 1LC	2	**11.8171-0008.1**	**990049**	ATE
2.0	96	11/00→12/04						
2.5 TDI quattro	132	11/00→12/04						
3.0	162	11/00→12/04						
3.0 quattro	162	11/00→12/04						
1.8 T	120 - 140	07/01→12/04		+PR 1LB / 1LE	2	**11.8171-0008.1**	**990049**	ATE
1.8 T quattro	120 - 140	07/01→12/04		+PR 1LF / 1LT	2	**11.8171-0008.1**	**990049**	ATE
1.9 TDI	74 - 85	05/01→12/04		+PR 1LA / 1LC	2	**11.8171-0008.1**	**990049**	ATE
1.9 TDI quattro	96	11/01→12/04						
2.0 FSI	110	07/02→12/04						
2.4	120 - 125	09/01→12/04						
2.5 TDI	114 - 120	08/01→12/04						
3.0	160	04/01→12/04						
3.0 quattro	160	04/01→12/04						
S4 quattro	253	03/03→12/04		→ 8H-7-900460; +PR 1LJ	2	**11.8171-0008.1**	**990049**	ATE

© 2022 Continental Aftermarket & Services GmbH

	kW				! #			
AUDI - A4 B6 (8E2) 11/00→12/05								
Guide Bolt, brake caliper								
S4 quattro	253	03/03→12/04		8H-7-900461→; +PR 1LJ	2	**11.8171-0008.1**	**990049**	ATE
AUDI - A4 B6 Avant (8E5) 02/00→12/05								
Guide Bolt, brake caliper								
1.6	75	09/01→12/04		+PR 1LB / 1LE	2	**11.8171-0008.1**	**990049**	ATE
1.8 T	110 - 140	09/01→12/04		+PR 1LF / 1LT	2	**11.8171-0008.1**	**990049**	ATE
1.8 T quattro	110 - 140	09/01→12/04		+PR 1LA / 1LC	2	**11.8171-0008.1**	**990049**	ATE
1.9 TDI	74 - 96	09/01→12/04						
1.9 TDI quattro	96	11/01→12/04						
2.0	96	09/01→12/04						
2.0 FSI	110	07/02→12/04						
2.4	120 - 125	09/01→12/04						
2.5 TDI	114 - 120	09/01→12/04						
2.5 TDI quattro	132	09/01→12/04						
3.0	160 - 162	04/01→12/04						
3.0 quattro	160 - 162	04/01→12/04						
S4 quattro	253	03/03→12/04		→ 8H-7-900460; +PR 1LJ	2	**11.8171-0008.1**	**990049**	ATE
				8H-7-900461→; +PR 1LJ	2	**11.8171-0008.1**	**990049**	ATE
AUDI - A4 B6 Convertible (8H7) 01/02→12/09								
Guide Bolt, brake caliper								
1.8 T	120 - 125	07/02→12/05		+PR 1LF / 1LT	2	**11.8171-0008.1**	**990049**	ATE
1.8 T quattro	120	05/03→12/05		+PR 1LB / 1LE	2	**11.8171-0008.1**	**990049**	ATE
2.0	96	09/04→12/05		+PR 1LA	2	**11.8171-0008.1**	**990049**	ATE
2.4	120 - 125	04/02→12/05						
2.5 TDI	120	08/02→12/05						
3.0	162	04/02→12/05						
3.0 quattro	162	05/03→12/05						
3.0	160	04/02→12/05		+PR 1LF / 1LT	2	**11.8171-0008.1**	**990049**	ATE
				+PR 1LB / 1LE	2	**11.8171-0008.1**	**990049**	ATE
				+PR 1LA / 1LC	2	**11.8171-0008.1**	**990049**	ATE
S4 quattro	253	03/04→12/05			2	**11.8171-0008.1**	**990049**	ATE
AUDI - A4 B7 (8EC) 11/04→06/08								
Guide Bolt, brake caliper								
1.6	75	11/04→06/08		+PR 1LF / 1LT	2	**11.8171-0008.1**	**990049**	ATE
1.8 T	120	11/04→06/08		+PR 1LA / 1LC	2	**11.8171-0008.1**	**990049**	ATE
1.8 T quattro	120	11/04→06/08		+PR 1LB / 1LE	2	**11.8171-0008.1**	**990049**	ATE
1.9 TDI	85	11/04→06/08						
2.0	96	11/04→06/08						
2.0 TDI	89 - 125	11/04→06/08						
2.0 TDI 16V	103	11/04→06/08						
2.0 TDI quattro	103 - 125	01/06→06/08						
2.0 TFSI	125 - 162	11/04→06/08						
2.0 TFSI quattro	147 - 162	11/04→06/08						
2.5 TDI	120	11/04→05/06						
2.7 TDI	120 - 132	11/05→06/08						
3.0	160	11/04→05/06						
3.0 quattro	160	11/04→07/06						
3.0 TDI quattro	150 - 171	11/04→06/08						
3.2 FSI	188	01/05→06/08						
3.2 FSI quattro	188	01/05→06/08						
2.0 TDI	93	11/05→11/06		06/06→; +PR 1LB / 1LE	2	**11.8171-0008.1**	**990049**	ATE
				06/06→; +PR 1LF / 1LT	2	**11.8171-0008.1**	**990049**	ATE
				06/06→; +PR 1LA / 1LC	2	**11.8171-0008.1**	**990049**	ATE
S4 quattro	253	11/04→06/08		→ 8H-7-900460; +PR 1LJ	2	**11.8171-0008.1**	**990049**	ATE
				8H-7-900461→; +PR 1LJ	2	**11.8171-0008.1**	**990049**	ATE
AUDI - A4 B7 Avant (8ED) 11/04→06/08								
Guide Bolt, brake caliper								
1.6	75	11/04→06/08		+PR 1LA / 1LC	2	**11.8171-0008.1**	**990049**	ATE

	kW				! #			
AUDI - A4 B7 Avant (8ED) 11/04→06/08								
Guide Bolt, brake caliper								
1.8 T	120	11/04→06/08		+PR 1LB / 1LE	2	**11.8171-0008.1**	**990049**	ATE
1.8 T quattro	120	11/04→06/08		+PR 1LF / 1LT	2	**11.8171-0008.1**	**990049**	ATE
1.9 TDI	85	11/04→06/08						
2.0	96	11/04→06/08						
2.0 TDI	89 - 125	11/04→06/08						
2.0 TDI 16V	103	11/04→06/08						
2.0 TDI quattro	103 - 125	01/06→06/08						
2.0 TFSI	125 - 162	11/04→06/08						
2.0 TFSI quattro	147 - 162	11/04→06/08						
2.5 TDI	120	11/04→05/06						
2.7 TDi	120	11/05→03/08						
2.7 TDI	132	01/06→06/08						
3.0	160	11/04→05/06						
3.0 quattro	160	11/04→07/06						
3.0 TDI quattro	150 - 171	11/04→06/08						
3.2 FSI	188	01/05→06/08						
3.2 FSI quattro	188	01/05→06/08						
2.0 TDI	93	11/05→11/06		06/06→; +PR 1LB / 1LE	2	**11.8171-0008.1**	**990049**	ATE
				06/06→; +PR 1LF / 1LT	2	**11.8171-0008.1**	**990049**	ATE
				06/06→; +PR 1LA / 1LC	2	**11.8171-0008.1**	**990049**	ATE
S4 quattro	253	11/04→06/08		→ 8H-7-900460; +PR 1LJ	2	**11.8171-0008.1**	**990049**	ATE
				8H-7-900461→; +PR 1LJ	2	**11.8171-0008.1**	**990049**	ATE
AUDI - A4 B7 Convertible (8HE) 01/02→12/09								
Guide Bolt, brake caliper								
1.8 T	120	01/06→03/09		+PR 1LB / 1LE	2	**11.8171-0008.1**	**990049**	ATE
				+PR 1LF / 1LT	2	**11.8171-0008.1**	**990049**	ATE
				+PR 1LA / 1LC	2	**11.8171-0008.1**	**990049**	ATE
2.0 TDI	100 - 103	01/06→03/09		→ 11/08; +PR 1LB / 1LE	2	**11.8171-0008.1**	**990049**	ATE
2.0 TFSI 16V	147	01/06→03/09		→ 11/08; +PR 1LF / 1LT	2	**11.8171-0008.1**	**990049**	ATE
2.7 TDI	132	06/06→03/09		→ 11/08; +PR 1LA	2	**11.8171-0008.1**	**990049**	ATE
3.0 TDI quattro	150 - 171	01/06→03/09						
3.2 FSI	188	01/06→03/09						
3.2 FSI quattro	188	01/06→03/09						
S4 quattro	253	11/05→03/09		→ 8H-7-900460; +PR 1LJ	2	**11.8171-0008.1**	**990049**	ATE
				8H-7-900461→; +PR 1LJ	2	**11.8171-0008.1**	**990049**	ATE
AUDI - A4 B8 (8K2) 08/07→12/15								
Guide Bolt, brake caliper								
1.8 T	110	07/08→05/10	←	+PR 1LT	2	**11.8171-0008.1**	**990049**	ATE
1.8 TFSI	88 - 118	11/07→12/15	←	+PR 1LY	2	**11.8171-0008.1**	**990049**	ATE
1.8 TFSI quattro	118	09/08→03/12						
2.0 TDI	88 - 140	11/07→12/15						
2.0 TDI quattro	105 - 140	01/08→12/15						
2.0 TFSI	132 - 165	06/08→12/15						
2.0 TFSI flexible fuel	132	11/09→12/15						
2.0 TFSI flexible fuel quattro	132	11/09→12/15						
2.0 TFSI quattro	132 - 165	06/08→12/15						
2.7 TDI	120 - 140	11/07→03/12						
3.0 TDI	150	11/11→12/15						
3.0 TDI quattro	155 - 180	11/07→12/15						
3.0 TFSI quattro	200	02/12→12/15						
3.2 FSI	195	09/08→03/12						
3.2 FSI quattro	195	11/07→03/12						
1.8 TFSI	125	11/11→12/15	←	01/12→; +PR 1LT	2	**11.8171-0008.1**	**990049**	ATE
1.8 TFSI quattro	125	11/11→12/15	←	01/12→; +PR 1LY	2	**11.8171-0008.1**	**990049**	ATE
AUDI - A4 B8 Avant (8K5) 11/07→12/15								
Guide Bolt, brake caliper								
1.8 TFSI	88	04/08→12/15		+PR 1LT	2	**11.8171-0008.1**	**990049**	ATE
1.8 TFSI quattro	118	09/08→03/12		+PR 1LY	2	**11.8171-0008.1**	**990049**	ATE

© 2022 Continental Aftermarket & Services GmbH

	kW				! #			
AUDI - A4 B8 Avant (8K5) 11/07→12/15								
Guide Bolt, brake caliper								
2.0 TDI	88 - 140	04/08→12/15		+PR 1LT	2	**11.8171-0008.1**	**990049**	ATE
2.0 TDI quattro	105 - 140	04/08→12/15		+PR 1LY	2	**11.8171-0008.1**	**990049**	ATE
2.0 TFSI	132 - 165	06/08→12/15						
2.0 TFSI flexible fuel	132	11/09→12/15						
2.0 TFSI flexible fuel quattro	132	11/09→12/15						
2.0 TFSI quattro	155 - 165	06/08→12/15						
2.7 TDI	120	06/08→03/12						
3.0 TDI	150	11/11→12/15						
3.0 TDI quattro	155 - 180	04/08→12/15						
3.0 TFSI quattro	200	02/12→12/15						
3.2 FSI	195	09/08→03/12						
3.2 FSI quattro	195	04/08→03/12						
1.8 TFSI	118	11/07→03/12		04/08→; +PR 1LT	2	**11.8171-0008.1**	**990049**	ATE
				04/08→; +PR 1LY	2	**11.8171-0008.1**	**990049**	ATE
1.8 TFSI	125	11/11→12/15		01/12→; +PR 1LT	2	**11.8171-0008.1**	**990049**	ATE
1.8 TFSI quattro	125	11/11→12/15		01/12→; +PR 1LY	2	**11.8171-0008.1**	**990049**	ATE
2.7 TDI	140	04/08→03/12		06/08→; +PR 1LT	2	**11.8171-0008.1**	**990049**	ATE
				06/08→; +PR 1LY	2	**11.8171-0008.1**	**990049**	ATE
AUDI - A4 B9 (8W2, 8WC) 05/15→								
Brake Caliper								
1.4 TFSI	110	08/15→11/19	←	+PR 1LC; ◪		**24.4426-7017.5**	**230165**	ATE
2.0 TDI	90 - 140	05/15→	←	+PR 1LC; ◪		**24.4426-7018.5**	**230166**	ATE
2.0 TDI quattro	110 - 140	09/15→11/19	←	+PR 1LE; ◪		**24.4426-7019.5**	**230161**	ATE
2.0 TFSI	140 - 185	05/15→	←	+PR 1LE; ◪		**24.4426-7020.5**	**230162**	ATE
2.0 TFSI Mild Hybrid	185	05/17→11/19	←	+PR 1LD; ◪		**24.4446-7002.5**	**230156**	ATE
2.0 TFSI Mild Hybrid quattro	185	05/17→11/19						
2.0 TFSI quattro	183 - 185	05/15→						
3.0 TDI	160	09/15→08/18						
3.0 TDI quattro	160 - 200	05/15→08/18						
30 TDI	90	05/16→11/19						
30 TDI Mild Hybrid	100	07/19→						
35 TDI	110	08/15→11/19						
35 TDI Mild Hybrid	120	03/19→						
35 TFSI Mild Hybrid	110	12/18→11/19						
40 TDI	140	05/15→11/19						
40 TDI Mild Hybrid quattro	150	05/20→						
40 TDI quattro	140	09/15→11/19						
40 TFSI Mild Hybrid	140 - 150	05/17→						
40 TFSI Mild Hybrid quattro	150	06/20→						
45 TDI quattro	170	07/18→11/19						
45 TFSI Mild Hybrid	180	07/18→11/19						
45 TFSI Mild Hybrid quattro	180 - 195	07/18→						
50 TDI quattro	210	07/18→11/19						
S4 quattro	260	05/16→11/19						
S4 TDI Mild Hybrid quattro	251 - 255	05/19→						
Guide Bolt, brake caliper								
1.4 TFSI	110	08/15→11/19		+PR 1LA / 1LB	2	**11.8171-0008.1**	**990049**	ATE
2.0 TDI	90 - 140	05/15→						
2.0 TDI quattro	110 - 140	09/15→11/19						
2.0 TFSI	140 - 185	05/15→						
2.0 TFSI Mild Hybrid	185	05/17→11/19						
2.0 TFSI Mild Hybrid quattro	185	05/17→11/19						
2.0 TFSI quattro	183 - 185	05/15→						
3.0 TDI	160	09/15→08/18						
3.0 TDI quattro	160 - 200	05/15→08/18						
30 TDI	90	05/16→11/19						

	kW				! #			
AUDI - A4 B9 (8W2, 8WC) 05/15→								
Guide Bolt, brake caliper								
30 TDI Mild Hybrid	100	07/19→		+PR 1LA / 1LB	2	**11.8171-0008.1**	**990049**	ATE
35 TDI	110	08/15→11/19						
35 TDI Mild Hybrid	120	03/19→						
35 TFSI Mild Hybrid	110	12/18→11/19						
40 TDI	140	05/15→11/19						
40 TDI Mild Hybrid quattro	150	05/20→						
40 TDI quattro	140	09/15→11/19						
40 TFSI Mild Hybrid	140 - 150	05/17→						
40 TFSI Mild Hybrid quattro	150	06/20→						
45 TDI quattro	170	07/18→11/19						
45 TFSI Mild Hybrid	180	07/18→11/19						
45 TFSI Mild Hybrid quattro	180 - 195	07/18→						
50 TDI quattro	210	07/18→11/19						
S4 quattro	260	05/16→11/19						
S4 TDI Mild Hybrid quattro	251 - 255	05/19→						
AUDI - A4 B9 Avant (8W5, 8WD) 08/15→								
Brake Caliper								
1.4 TFSI	110	02/16→10/19		+PR 1LC;		**24.4426-7017.5**	**230165**	ATE
2.0 TDI	90 - 140	08/15→10/19		+PR 1LC;		**24.4426-7018.5**	**230166**	ATE
2.0 TDI quattro	110 - 140	10/15→10/19		+PR 1LE;		**24.4426-7019.5**	**230161**	ATE
2.0 TFSI	140 - 185	08/15→		+PR 1LE;		**24.4426-7020.5**	**230162**	ATE
2.0 TFSI g-tron	125	11/16→10/19		+PR 1LD;		**24.4446-7002.5**	**230156**	ATE
2.0 TFSI Mild Hybrid	185	05/17→10/19						
2.0 TFSI Mild Hybrid quattro	185	11/18→						
2.0 TFSI quattro	183 - 185	08/15→10/19						
3.0 TDI	160	10/15→08/18						
3.0 TDI quattro	160 - 200	08/15→08/18						
30 TDI	90	10/18→10/19						
30 TDI Mild Hybrid	100	07/19→						
35 TDI	110	10/18→10/19						
35 TDI Mild Hybrid	120	07/19→						
35 TFSI Mild Hybrid	110	12/18→10/19						
40 TDI	140	10/18→05/19						
40 TDI Mild Hybrid quattro	150	05/20→						
40 TDI quattro	140	10/18→09/20						
40 TFSI g-tron	125	11/16→10/19						
40 TFSI Mild Hybrid	140 - 150	05/17→						
40 TFSI Mild Hybrid quattro	150	06/20→						
45 TDI quattro	170	07/18→10/19						
45 TFSI Mild Hybrid	180	07/18→10/19						
45 TFSI Mild Hybrid quattro	180 - 195	07/18→						
50 TDI quattro	210	07/18→10/19						
S4 quattro	260	05/16→10/19						
S4 TDI Mild Hybrid quattro	251 - 255	05/19→						
Guide Bolt, brake caliper								
1.4 TFSI	110	02/16→10/19		+PR 1LA / 1LB	2	**11.8171-0008.1**	**990049**	ATE
2.0 TDI	90 - 140	08/15→10/19						
2.0 TDI quattro	110 - 140	10/15→10/19						
2.0 TFSI	140 - 185	08/15→						
2.0 TFSI g-tron	125	11/16→10/19						
2.0 TFSI Mild Hybrid	185	05/17→10/19						
2.0 TFSI Mild Hybrid quattro	185	11/18→						
2.0 TFSI quattro	183 - 185	08/15→10/19						
3.0 TDI	160	10/15→08/18						
3.0 TDI quattro	160 - 200	08/15→08/18						
30 TDI	90	10/18→10/19						
30 TDI Mild Hybrid	100	07/19→						
35 TDI	110	10/18→10/19						
35 TDI Mild Hybrid	120	07/19→						

© 2022 Continental Aftermarket & Services GmbH

	kW				! #			
AUDI - A4 B9 Avant (8W5, 8WD) 08/15→								
Guide Bolt, brake caliper								
35 TFSI Mild Hybrid	110	12/18→10/19		+PR 1LA / 1LB	2	**11.8171-0008.1**	**990049**	ATE
40 TDI	140	10/18→05/19						
40 TDI Mild Hybrid quattro	150	05/20→						
40 TDI quattro	140	10/18→09/20						
40 TFSI g-tron	125	11/16→10/19						
40 TFSI Mild Hybrid	140 - 150	05/17→						
40 TFSI Mild Hybrid quattro	150	06/20→						
45 TDI quattro	170	07/18→10/19						
45 TFSI Mild Hybrid	180	07/18→10/19						
45 TFSI Mild Hybrid quattro	180 - 195	07/18→						
50 TDI quattro	210	07/18→10/19						
S4 quattro	260	05/16→10/19						
S4 TDI Mild Hybrid quattro	251 - 255	05/19→						
AUDI - A5 (8T3) 06/07→01/17								
Guide Bolt, brake caliper								
1.8 TFSI	118 - 130	10/07→01/17		+PR 1LT	2	**11.8171-0008.1**	**990049**	ATE
2.0 TDI	125 - 140	08/08→01/17						
2.0 TDI quattro	125 - 140	08/08→01/17						
2.0 TFSI	132 - 169	06/08→01/17						
2.0 TFSI quattro	155 - 169	06/08→01/17						
2.7 TDI	120 - 140	06/07→03/12						
3.0 TDI	150	10/11→01/17						
3.0 TDI quattro	155 - 180	06/07→01/17						
3.0 TFSI quattro	200	12/11→01/17						
3.2 FSI	195	06/07→03/12						
3.2 FSI quattro	195	06/07→03/12						
2.0 TDI	120	08/08→01/17		10/08→; +PR 1LT	2	**11.8171-0008.1**	**990049**	ATE
2.0 TFSI quattro	162	03/12→01/17		05/13→; +PR 1LT	2	**11.8171-0008.1**	**990049**	ATE
AUDI - A5 (F53, F5P) 06/16→								
Brake Caliper								
1.4 TFSI	110	11/16→02/20	←	+PR 1LC; ◪		**24.4426-7017.5**	**230165**	ATE
2.0 TDI	110 - 140	07/16→	←	+PR 1LC; ◪		**24.4426-7018.5**	**230166**	ATE
2.0 TDI quattro	140	10/16→	←	+PR 1LE; ◪		**24.4426-7019.5**	**230161**	ATE
2.0 TFSI	140 - 185	09/16→	←	+PR 1LE; ◪		**24.4426-7020.5**	**230162**	ATE
2.0 TFSI Mild Hybrid	185	05/17→02/20	←	+PR 1LD; ◪		**24.4446-7002.5**	**230156**	ATE
2.0 TFSI Mild Hybrid quattro	185	05/17→02/20						
2.0 TFSI quattro	183 - 185	06/16→						
3.0 TDI	160	11/16→08/18						
3.0 TDI quattro	160 - 210	07/16→02/20						
30 TDI Mild Hybrid	100	10/19→						
35 TDI	110 - 120	05/17→						
35 TFSI Mild Hybrid	110	02/19→02/20						
40 TDI	140	06/16→02/20						
40 TDI Mild Hybrid quattro	150	09/20→						
40 TDI quattro	140	10/16→02/20						
40 TFSI Mild Hybrid	140 - 150	05/17→						
40 TFSI Mild Hybrid quattro	150	07/20→						
45 TDI quattro	170	07/18→02/20						
45 TFSI Mild Hybrid	180	07/18→02/20						
45 TFSI Mild Hybrid quattro	180 - 195	07/18→						
50 TDI Mild Hybrid quattro	210	08/20→						
50 TDI quattro	210	01/17→02/20						
RS5 quattro	331	04/17→						
S5 quattro	260	07/16→						
S5 TDI Mild Hybrid quattro	251 - 255	12/18→						

	kW				! #			
AUDI - A5 Convertible (8F7) 02/09→01/17								
Guide Bolt, brake caliper								
1.8 TFSI	118 - 130	09/09→01/17		+PR 1LT	2	**11.8171-0008.1**	**990049**	ATE
2.0 TDI	110 - 140	05/09→01/17						
2.0 TDI quattro	130 - 140	01/12→01/17						
2.0 TFSI	132 - 169	03/09→01/17						
2.0 TFSI quattro	155 - 169	03/09→01/17						
2.7 TDI	120 - 140	03/09→03/12						
3.0 TDI	150	10/11→01/17						
3.0 TDI quattro	160 - 180	03/09→01/17						
3.0 TFSI quattro	200	11/11→01/17						
3.2 FSI	195	03/09→03/12						
3.2 FSI quattro	195	03/09→03/12						
2.0 TDI	105	10/11→05/15		11/11→; +PR 1LT	2	**11.8171-0008.1**	**990049**	ATE
2.0 TFSI quattro	162	03/12→01/17		05/13→; +PR 1LT	2	**11.8171-0008.1**	**990049**	ATE
AUDI - A5 Convertible (F57, F5E) 11/16→								
Brake Caliper								
2.0 TDI	110 - 140	11/16→12/19	←	+PR 1LC;		**24.4426-7017.5**	**230165**	ATE
2.0 TDI quattro	140	03/17→	←	+PR 1LC;		**24.4426-7018.5**	**230166**	ATE
2.0 TFSI	140 - 185	03/17→12/19	←	+PR 1LE;		**24.4426-7019.5**	**230161**	ATE
2.0 TFSI Mild Hybrid	185	05/17→12/19	←	+PR 1LE;		**24.4426-7020.5**	**230162**	ATE
2.0 TFSI Mild Hybrid quattro	185	05/17→12/19	←	+PR 1LD;		**24.4446-7002.5**	**230156**	ATE
2.0 TFSI quattro	185	11/16→12/19						
3.0 TDI	160	03/17→08/18						
3.0 TDI quattro	160 - 210	11/16→12/19						
30 TDI MILD HYBRID	100	07/18→12/19						
35 TDI	120	10/19→						
35 TFSI Mild Hybrid	110	06/20→						
40 TDI	140	11/16→12/19						
40 TDI Mild Hybrid	150	09/20→						
40 TDI Mild Hybrid quattro	150	09/20→						
40 TDI quattro	140	03/17→12/19						
40 TFSI Mild Hybrid	140 - 150	05/17→						
40 TFSI Mild Hybrid quattro	150	06/20→						
45 TFSI Mild Hybrid	180	07/18→12/19						
45 TFSI Mild Hybrid quattro	180 - 195	07/18→						
50 TDI quattro	210	11/16→12/19						
S5 quattro	260	03/17→						
AUDI - A5 Sportback (8TA) 07/07→01/17								
Guide Bolt, brake caliper								
1.8 TFSI	106 - 130	11/09→01/17		+PR 1LT	2	**11.8171-0008.1**	**990049**	ATE
2.0 TDI	100 - 140	09/09→01/17						
2.0 TDI quattro	125 - 140	09/09→01/17						
2.0 TFSI	132 - 169	09/09→01/17						
2.0 TFSI quattro	155 - 169	09/09→01/17						
2.7 TDI	120 - 140	09/09→03/12						
3.0 TDI	150	10/11→01/17						
3.0 TDI quattro	160 - 180	09/09→01/17						
3.0 TFSI quattro	200	12/11→01/17						
3.2 FSI quattro	195	09/09→03/12						
AUDI - A5 Sportback (F5A, F5F) 06/16→								
Brake Caliper								
1.4 TFSI	110	01/17→02/20	←	+PR 1LC;		**24.4426-7017.5**	**230165**	ATE
2.0 TDI	100 - 140	09/16→	←	+PR 1LC;		**24.4426-7018.5**	**230166**	ATE
2.0 TDI quattro	110 - 140	10/16→	←	+PR 1LE;		**24.4426-7019.5**	**230161**	ATE

© 2022 Continental Aftermarket & Services GmbH

	kW				! #			
AUDI - A5 Sportback (F5A, F5F) 06/16→								
Brake Caliper								
2.0 TFSI	140 - 185	11/16→		+PR 1LE;		**24.4426-7020.5**	**230162**	ATE
2.0 TFSI g-tron	125	02/17→02/20		+PR 1LD;		**24.4446-7002.5**	**230156**	ATE
2.0 TFSI Mild Hybrid	185	05/17→02/20						
2.0 TFSI Mild Hybrid quattro	185	05/17→02/20						
2.0 TFSI quattro	183 - 185	09/16→						
3.0 TDI	160	03/17→08/18						
3.0 TDI quattro	160 - 210	09/16→						
30 TDI Mild Hybrid	100	10/19→						
35 TDI	110 - 120	01/17→						
35 TFSI Mild Hybrid	110	08/18→02/20						
40 TDI	140	09/16→02/20						
40 TDI Mild Hybrid	150	09/20→						
40 TDI Mild Hybrid quattro	150	09/20→						
40 TDI quattro	140	08/16→02/20						
40 TFSI g-tron	125	02/17→						
40 TFSI Mild Hybrid	140 - 150	05/17→						
40 TFSI Mild Hybrid quattro	150	06/20→						
45 TDI quattro	170	07/18→02/20						
45 TFSI Mild Hybrid	180	07/18→02/20						
45 TFSI Mild Hybrid quattro	180 - 195	02/19→						
50 TDI Mild Hybrid quattro	210	08/20→						
50 TDI quattro	210	01/17→02/20						
RS5 quattro	331	06/18→						
S5 quattro	260	09/16→						
S5 TDI Mild Hybrid quattro	251 - 255	12/18→						
AUDI - A6 Allroad C6 (4FH) 03/06→08/11								
Guide Bolt, brake caliper								
2.7 TDI quattro	120 - 140	05/06→08/11		→ 05/11; +PR 1LG	2	**11.8171-0008.1**	**990049**	ATE
3.0 TDI quattro	155 - 176	05/06→08/11		→ 05/11; +PR 1ZL	2	**11.8171-0008.1**	**990049**	ATE
3.0 TFSI quattro	213	10/08→08/11						
2.7 TDI quattro	132	03/06→10/08		+PR 1LG	2	**11.8171-0008.1**	**990049**	ATE
3.0 TDI quattro	171	05/06→10/08		+PR 1ZL	2	**11.8171-0008.1**	**990049**	ATE
3.2 FSI quattro	188	05/06→10/08						
4.2 FSI quattro	257	05/06→12/10						
AUDI - A6 Allroad C8 (4AH) 11/18→								
Brake Caliper								
40 TDI Mild Hybrid quattro	150	09/20→		+PR 1LC;		**24.4426-7017.5**	**230165**	ATE
45 TDI Mild Hybrid quattro	170 - 180	11/18→		+PR 1LC;		**24.4426-7018.5**	**230166**	ATE
50 TDI Mild Hybrid quattro	210	11/18→		+PR 1LE;		**24.4426-7019.5**	**230161**	ATE
55 TDI Mild Hybrid	253	11/20→		+PR 1LE;		**24.4426-7020.5**	**230162**	ATE
55 TDI Mild Hybrid quattro	257	03/19→						
55 TFSI Mild Hybrid quattro	250	11/19→						
AUDI - A6 C4 (4A2) 06/94→10/97								
Guide Bolt, brake caliper								
1.8	92	12/95→10/97			2	**11.8171-0008.1**	**990049**	ATE
1.9 TDI	66	06/94→10/97						
2.0	74 - 85	06/94→10/97						
2.0 16V	103	06/94→10/97						
2.3	98	06/94→12/95						
2.4	110	07/95→06/96						
2.5 TDI	85	06/94→10/97						
2.6	102 - 110	06/94→10/97						
2.8	120 - 142	06/94→10/97						
1.8 quattro	92	12/95→10/97			2	**11.8171-0008.1**	**990049**	ATE
2.0 16V quattro	103	06/94→10/97						
2.5 TDI quattro	103	10/95→10/97						
2.6 quattro	110	06/94→10/97						

	kW				! #			
AUDI - A6 C4 (4A2) 06/94→10/97								
Guide Bolt, brake caliper								
2.8 quattro	128 - 142	06/94→10/97			2	**11.8171-0008.1**	**990049**	ATE
2.3 quattro	98	06/94→12/95		08/94→	2	**11.8171-0008.1**	**990049**	ATE
2.5 TDI	103	08/94→10/97	←	10/94→	2	**11.8171-0008.1**	**990049**	ATE
AUDI - A6 C4 Avant (4A5) 06/94→12/97								
Guide Bolt, brake caliper								
1.8	92	12/95→12/97	←		2	**11.8171-0008.1**	**990049**	ATE
1.9 TDI	66	06/94→12/97						
2.0	74 - 85	06/94→12/97						
2.0 16V	103	06/94→12/97						
2.3	98	06/94→12/95						
2.5 TDI	85	06/94→12/97						
2.6	102 - 110	06/94→12/97						
2.8	128 - 142	06/94→12/97						
1.8 quattro	92	12/95→12/97			2	**11.8171-0008.1**	**990049**	ATE
2.0 16V quattro	103	06/94→12/97						
2.5 TDI quattro	103	07/95→12/97						
2.6 quattro	110	06/94→12/97						
2.8 quattro	128 - 142	06/94→12/97						
2.3 quattro	98	06/94→12/95		08/94→	2	**11.8171-0008.1**	**990049**	ATE
2.5 TDI	103	08/94→12/97	←	10/94→	2	**11.8171-0008.1**	**990049**	ATE
AUDI - A6 C5 (4B2) 01/97→12/05								
Guide Bolt, brake caliper								
1.8	85 - 92	05/97→01/05		4B-2-031501→; +PR 1LF / 1LT	2	**11.8171-0008.1**	**990049**	ATE
				4B-2-031501→; +PR 1LB / 1LE	2	**11.8171-0008.1**	**990049**	ATE
1.8 T	132	12/97→01/05						
1.8 T quattro	132	12/97→01/05	←	→ 4B-2-031500; +PR 1LB / 1LE	2	**11.8171-0008.1**	**990049**	ATE
1.9 TDI	81 - 96	04/97→01/05	←	→ 4B-2-031500; +PR 1LF / 1LT	2	**11.8171-0008.1**	**990049**	ATE
2.0	96	08/01→01/05						
2.4	100 - 125	07/98→01/05						
2.4 quattro	115 - 125	08/98→01/05						
2.5 TDI	110 - 132	07/97→01/05						
2.5 TDI quattro	110 - 132	07/97→01/05						
2.8	132 - 140	10/97→01/05						
2.8 quattro	132 - 140	01/98→05/01						
1.8 T	110	01/97→01/05		4B-2-031501→; +PR 1LF / 1LT	2	**11.8171-0008.1**	**990049**	ATE
1.8 T quattro	110	02/97→01/05		4B-2-031501→; +PR 1LB / 1LE	2	**11.8171-0008.1**	**990049**	ATE
2.4	115 - 121	02/97→01/05	←	04/97→; → 4B-2-031500; +PR 1LB / 1LE	2	**11.8171-0008.1**	**990049**	ATE
2.4 quattro	120 - 121	02/97→01/05	←	04/97→; → 4B-2-031500; +PR 1LF / 1LT	2	**11.8171-0008.1**	**990049**	ATE
2.8	142	02/97→01/05						
2.8 quattro	142	02/97→01/05						
3.0	160 - 162	06/01→01/05			2	**11.8171-0008.1**	**990049**	ATE
3.0 quattro	160 - 162	06/01→01/05						
3.7	191	03/99→01/05						
3.7 quattro	191	03/99→01/05						
AUDI - A6 C5 Avant (4B5) 11/97→01/05								
Guide Bolt, brake caliper								
1.8	85 - 92	12/97→01/05		4B-2-031501→; +PR 1LB / 1LE	2	**11.8171-0008.1**	**990049**	ATE
				4B-2-031501→; +PR 1LF / 1LT	2	**11.8171-0008.1**	**990049**	ATE
1.8 T	110 - 132	12/97→01/05	←	→ 4B-2-031500; +PR 1LB / 1LE	2	**11.8171-0008.1**	**990049**	ATE
1.8 T quattro	110 - 132	12/97→01/05	←	→ 4B-2-031500; +PR 1LF / 1LT	2	**11.8171-0008.1**	**990049**	ATE
1.9 TDI	81 - 96	02/98→01/05						
2.0	96	08/01→01/05						
2.4	100 - 125	12/97→01/05						
2.4 quattro	115 - 125	12/97→01/05						
2.5 TDI	110 - 132	12/97→01/05						

© 2022 Continental Aftermarket & Services GmbH

	kW				! #			
AUDI - A6 C5 Avant (4B5) 11/97→01/05								
Guide Bolt, brake caliper								
2.5 TDI quattro	110 - 132	12/97→01/05		4B-2-031501→; +PR 1LB / 1LE	2	**11.8171-0008.1**	**990049**	ATE
2.8	132 - 142	12/97→01/05		4B-2-031501→; +PR 1LF / 1LT	2	**11.8171-0008.1**	**990049**	ATE
2.8 quattro	142	12/97→01/05	←	→ 4B-2-031500; +PR 1LB / 1LE	2	**11.8171-0008.1**	**990049**	ATE
			←	→ 4B-2-031500; +PR 1LF / 1LT	2	**11.8171-0008.1**	**990049**	ATE
3.0	160 - 162	06/01→01/05			2	**11.8171-0008.1**	**990049**	ATE
3.0 quattro	160 - 162	06/01→01/05						
3.7	191	03/99→01/05						
3.7 quattro	191	03/99→01/05						
AUDI - A6 C6 (4F2) 04/04→08/11								
Guide Bolt, brake caliper								
2.0 TDI	89 - 103	07/04→10/08		+PR 1LT	2	**11.8171-0008.1**	**990049**	ATE
2.0 TFSI	125	06/05→03/11		+PR 1LG / 1LD	2	**11.8171-0008.1**	**990049**	ATE
2.4	130	05/04→10/08		+PR 1ZL / 1LH	2	**11.8171-0008.1**	**990049**	ATE
2.4 quattro	130	01/05→10/08						
2.7 TDI	120 - 132	11/04→03/11						
2.7 TDI quattro	120 - 132	11/04→03/11						
2.8 FSI	154	11/06→10/08						
2.8 FSI quattro	154	06/07→10/08						
3.0	160	08/04→05/06						
3.0 quattro	160	05/04→05/06						
3.0 TDI quattro	155 - 171	05/04→03/11						
3.2 FSI	188 - 195	05/04→03/11						
3.2 FSI quattro	183 - 188	05/04→10/08						
4.2 FSI quattro	257	06/06→03/11						
4.2 quattro	246	05/04→05/06						
2.0 TDI	100	07/04→03/11		06/05→; +PR 1LT	2	**11.8171-0008.1**	**990049**	ATE
				06/05→; +PR 1LG / 1LD	2	**11.8171-0008.1**	**990049**	ATE
				06/05→; +PR 1ZL / 1LH	2	**11.8171-0008.1**	**990049**	ATE
2.0 TDI	120 - 125	11/08→03/11		+PR 1LT	2	**11.8171-0008.1**	**990049**	ATE
2.7 TDI	140	10/08→03/11		+PR 1LG	2	**11.8171-0008.1**	**990049**	ATE
2.7 TDI quattro	140	10/08→03/11		+PR 1ZL	2	**11.8171-0008.1**	**990049**	ATE
2.8 FSI	140 - 162	10/08→03/11						
2.8 FSI quattro	140 - 162	10/08→03/11						
3.0 TDI quattro	176	10/08→03/11						
3.0 TFSI quattro	213 - 220	10/08→03/11						
AUDI - A6 C6 Avant (4F5) 11/04→08/11								
Guide Bolt, brake caliper								
2.0 TDI	89 - 103	06/05→08/11		+PR 1LT	2	**11.8171-0008.1**	**990049**	ATE
2.0 TFSI	125	06/05→08/11		+PR 1LG / 1LD	2	**11.8171-0008.1**	**990049**	ATE
2.4	130	03/05→10/08		+PR 1ZL / 1LH	2	**11.8171-0008.1**	**990049**	ATE
2.4 quattro	130	03/05→10/08						
2.7 TDI	120 - 132	03/05→08/11						
2.7 TDI quattro	120 - 132	11/04→08/11						
2.8 FSI	154	11/06→10/08						
2.8 FSI quattro	154	06/07→10/08						
3.0	160	03/05→05/06						
3.0 quattro	160	03/05→05/06						
3.0 TDI quattro	155 - 171	03/05→08/11						
3.2 FSI	188	03/05→10/08						
3.2 FSI quattro	188	03/05→10/08						
4.2 FSI quattro	257	06/06→08/11						
4.2 quattro	246	03/05→05/06						
2.0 TDI	120 - 125	10/08→08/11		+PR 1LT	2	**11.8171-0008.1**	**990049**	ATE
2.7 TDI	140	10/08→08/11		+PR 1LG	2	**11.8171-0008.1**	**990049**	ATE
2.7 TDI quattro	140	10/08→08/11		+PR 1ZL	2	**11.8171-0008.1**	**990049**	ATE
2.8 FSI	140 - 162	10/08→08/11						
2.8 FSI quattro	140 - 162	10/08→08/11						
3.0 TDI quattro	176	10/08→08/11						

	kW				! #			
AUDI - A6 C6 Avant (4F5) 11/04→08/11								
Guide Bolt, brake caliper								
3.0 TFSI quattro	213 - 220	10/08→08/11		+PR 1LT	2	**11.8171-0008.1**	**990049**	ATE
				+PR 1LG	2	**11.8171-0008.1**	**990049**	ATE
				+PR 1ZL	2	**11.8171-0008.1**	**990049**	ATE
AUDI - A6 C8 (4A2) 02/18→								
Brake Caliper								
30 TDI Mild Hybrid	100	01/19→	←	+PR 1LC; ■□		**24.4426-7017.5**	**230165**	ATE
35 TDI Mild Hybrid	120	03/19→						
35 TDI Mild Hybrid quattro	120	11/20→	←	+PR 1LC; □■		**24.4426-7018.5**	**230166**	ATE
40 TDI Mild Hybrid	140 - 150	07/18→	←	+PR 1LE; ■□		**24.4426-7019.5**	**230161**	ATE
40 TDI Mild Hybrid quattro	150	07/18→	←	+PR 1LE; □■		**24.4426-7020.5**	**230162**	ATE
40 TFSI	150	09/20→						
45 TDI Mild Hybrid quattro	155 - 183	07/18→						
45 TFSI Mild Hybrid	180 - 195	08/18→						
45 TFSI Mild Hybrid quattro	180 - 195	08/18→						
50 TDI Mild Hybrid quattro	210	02/18→						
50 TFSI e quattro	185 - 220	11/19→						
55 TFSI e quattro	185 - 270	11/19→						
55 TFSi Mild Hybrid quattro	250	02/18→						
S6 TDI Mild Hybrid quattro	253 - 257	03/19→						
AUDI - A6 C8 Avant (4A5) 05/18→								
Brake Caliper								
30 TDI Mild Hybrid	100	01/19→	←	+PR 1LC; ■□		**24.4426-7017.5**	**230165**	ATE
35 TDI Mild Hybrid	120	03/19→						
35 TDI Mild Hybrid quattro	120	10/20→	←	+PR 1LC; □■		**24.4426-7018.5**	**230166**	ATE
40 TDI Mild Hybrid	140 - 150	05/18→	←	+PR 1LE; ■□		**24.4426-7019.5**	**230161**	ATE
40 TDI Mild Hybrid quattro	150	07/18→	←	+PR 1LE; □■		**24.4426-7020.5**	**230162**	ATE
40 TFSI	150	09/20→						
45 TDI Mild Hybrid quattro	155 - 183	05/18→						
45 TFSI Mild Hybrid	180 - 195	08/18→						
45 TFSI Mild Hybrid quattro	180 - 195	08/18→						
50 TDI Mild Hybrid quattro	210	05/18→						
50 TFSi e quattro	195 - 220	02/21→						
55 TFSI e quattro	185 - 270	04/20→						
55 TFSI Mild Hybrid quattro	250	05/18→						
S6 TDI Mild Hybrid	253	11/20→						
S6 TDI Mild Hybrid quattro	257	03/19→						
AUDI - A7 Sportback (4KA) 10/17→								
Brake Caliper								
40 TDI Mild Hybrid	150	09/18→	←	+PR 1LC; ■□		**24.4426-7017.5**	**230165**	ATE
40 TDI Mild Hybrid quattro	150	09/18→	←	+PR 1LC; □■		**24.4426-7018.5**	**230166**	ATE
45 TDI Mild Hybrid quattro	155 - 180	04/18→	←	+PR 1LE; ■□		**24.4426-7019.5**	**230161**	ATE
45 TFSI Mild Hybrid	180 - 195	07/18→	←	+PR 1LE; □■		**24.4426-7020.5**	**230162**	ATE
45 TFSI Mild hybrid quattro	180	07/18→						
45 TFSI Mild Hybrid quattro	195	05/20→						
50 TDI Mild Hybrid quattro	210	10/17→						
50 TFSI e quattro	195 - 220	11/19→						
55 TFSI e quattro	185 - 270	07/19→						

© 2022 Continental Aftermarket & Services GmbH

	kW				! #			
AUDI - A7 Sportback (4KA) 10/17→								
Brake Caliper								
55 TFSI Mild Hybrid quattro	250	10/17→		+PR 1LC;		**24.4426-7017.5**	**230165**	ATE
S7 TDI Mild Hybrid quattro	253 - 257	03/19→		+PR 1LC;		**24.4426-7018.5**	**230166**	ATE
				+PR 1LE;		**24.4426-7019.5**	**230161**	ATE
				+PR 1LE;		**24.4426-7020.5**	**230162**	ATE
AUDI - A8 D2 (4D2, 4D8) 03/94→12/05								
Guide Bolt, brake caliper								
6.0 W12 quattro	309	01/01→09/02			2	**11.8171-0008.1**	**990049**	ATE
AUDI - A8 D3 (4E2, 4E8) 10/02→12/10								
Guide Bolt, brake caliper								
2.8 FSI	154	08/07→07/10		→ 10/09; +PR 1LG	2	**11.8171-0008.1**	**990049**	ATE
3.0	160 - 162	07/03→05/06		→ 4E-5-003250; +PR 1LG	2	**11.8171-0008.1**	**990049**	ATE
3.0 quattro	160 - 162	07/03→05/05		4E-5-003251→; +PR 1LG	2	**11.8171-0008.1**	**990049**	ATE
4.0 TDI quattro	202	05/03→07/05						
3.0 TDI quattro	155	11/03→07/10		→ 4E-5-003250; +PR 1LG	2	**11.8171-0008.1**	**990049**	ATE
3.2 FSI	191	06/05→07/10		4E-5-003251→; → 10/09; +PR 1LG	2	**11.8171-0008.1**	**990049**	ATE
3.2 FSI quattro	191	06/05→07/10						
4.2 FSI quattro	257	06/06→07/10						
4.2 TDI quattro	240	07/05→07/10						
3.0 TDI quattro	171	08/03→07/10		11/03→; +PR 1LG; → 4E-5-003250	2	**11.8171-0008.1**	**990049**	ATE
				4E-5-003251→; → 10/09; +PR 1LG	2	**11.8171-0008.1**	**990049**	ATE
3.7 quattro	206	10/02→05/06		11/02→; +PR 1LG; → 4E-5-003250	2	**11.8171-0008.1**	**990049**	ATE
				4E-5-003251→; +PR 1LG	2	**11.8171-0008.1**	**990049**	ATE
4.2 quattro	246	10/02→07/10		11/02→; +PR 1LG; → 4E-5-003250	2	**11.8171-0008.1**	**990049**	ATE
				4E-5-003251→; → 10/09; +PR 1LG	2	**11.8171-0008.1**	**990049**	ATE
4.2 TDI quattro	235	01/05→06/05		4E-5-003251→; +PR 1LG	2	**11.8171-0008.1**	**990049**	ATE
6.0 W12 quattro	331	12/03→07/10		4E-5-003251→; → 10/09; +PR 1LG	2	**11.8171-0008.1**	**990049**	ATE
				02/04→; +PR 1LG; → 4E-5-003250	2	**11.8171-0008.1**	**990049**	ATE
AUDI - ALLROAD C5 (4BH) 05/00→08/05								
Guide Bolt, brake caliper								
2.5 TDI quattro	120 - 132	05/00→08/05		+PR 1LA; → 07/05	2	**11.8171-0008.1**	**990049**	ATE
2.7 quattro	187	09/00→08/05						
2.7 T quattro	184	05/00→08/05						
4.2 V8 quattro	220	07/02→08/05						
AUDI - CABRIOLET B3 (8G7) 05/91→08/00								
Guide Bolt, brake caliper								
2.3 E	98	05/91→07/94		07/91→; → 8G-N-025000	2	**11.8171-0008.1**	**990049**	ATE
AUDI - COUPE B3 (89, 8B3) 10/88→12/96								
Guide Bolt, brake caliper								
1.8	82	08/89→07/91			2	**11.8171-0008.1**	**990049**	ATE
2.0	82 - 83	05/89→07/90						
2.0 16 V	101	01/92→07/92						
2.0 20 V	118	08/89→07/91						
2.2 quattro	100	11/88→07/91						
2.6 quattro	110	08/92→12/96						
2.0	85	05/89→12/96		→ 07/92	2	**11.8171-0008.1**	**990049**	ATE
2.3	98	03/90→12/96						
2.3 quattro	98 - 100	11/88→12/96						
2.3	100	10/88→07/94		11/88→ 07/92	2	**11.8171-0008.1**	**990049**	ATE
AUDI - Q2 (GAB, GAG) 06/16→								
Brake Master Cylinder								
1.0 TFSI	85	10/16→10/20		for left-hand drive vehicles; → 03/18		**24.4123-1719.3**	**011017**	TRW Ø 23.8 without brake fluid reservoir
1.4 TFSI	110	06/16→08/18						
1.6 TDI	85	06/16→10/18						
2.0 TDI	110	09/16→						
2.0 TDI quattro	110 - 140	07/16→						
2.0 TFSI quattro	140	05/17→						
35 TDI	110	09/16→						

AUDI - Q2 (GAB, GAG) 06/16→

Brake Caliper

	kW				! #			
1.0 TFSI 1.4 TFSI 1.6 TDI 2.0 TDI 2.0 TDI quattro 2.0 TFSI quattro 30 TDI 30 TFSI 35 TDI 35 TDI quattro 35 TFSI 40 TFSI quattro SQ2 TFSI quattro	85 110 85 110 110 - 140 140 85 81 - 85 110 110 110 140 221	10/16→10/20 06/16→08/18 06/16→10/18 09/16→ 07/16→ 05/17→ 07/18→ 07/18→ 09/16→ 09/18→ 07/18→ 09/18→ 08/18→	←	+PR 1ZD; +PR 1ZK;		**24.3571-1801.5**	**241387**	without holder
			←	+PR 1ZD; +PR 1ZK;		**24.3571-1802.5**	**241388**	without holder
			→	+PR 1KE / 1KR;		**24.6238-7023.5** **24.6238-7047.5**	**241241** **241181**	ATE without holder + eFSB ATE without holder + eFSB
			→	+PR 1KE / 1KR;		**24.6238-7024.5** **24.6238-7048.5**	**241242** **241182**	ATE without holder + eFSB ATE without holder + eFSB
			→	+PR 1KJ;		**24.6242-7017.5**	**241185**	ATE without holder + eFSB
			→	+PR 1KJ;		**24.6242-7018.5**	**241186**	ATE without holder + eFSB

Guide Bolt, brake caliper

1.0 TFSI 1.4 TFSI 1.6 TDI 2.0 TDI 2.0 TDI quattro 2.0 TFSI quattro 30 TDI 30 TFSI 35 TDI 35 TDI quattro 35 TFSI 40 TFSI quattro SQ2 TFSI quattro	85 110 85 110 110 - 140 140 85 81 - 85 110 110 110 140 221	10/16→10/20 06/16→08/18 06/16→10/18 09/16→ 07/16→ 05/17→ 07/18→ 07/18→ 09/16→ 09/18→ 07/18→ 09/18→ 08/18→	→	+PR 1KJ / 1KY	2	**11.8171-0008.1**	**990049**	ATE

Brake Pad Set, disc brake

1.0 TFSI 1.4 TFSI 1.6 TDI 2.0 TDI 2.0 TDI quattro 2.0 TFSI quattro 30 TDI 30 TFSI 35 TDI 35 TDI quattro 35 TFSI 40 TFSI quattro	85 110 85 110 110 - 140 140 85 81 - 85 110 110 110 140	10/16→10/20 06/16→08/18 06/16→10/18 09/16→ 07/16→ 05/17→ 07/18→ 07/18→ 09/16→ 09/18→ 07/18→ 09/18→	←	+PR 1ZA / 1ZB / 1ZD / 1ZE / 1ZJ / 1ZK / 1ZU		**13.0460-2785.2** **13.0470-2785.2**	**602785** **LD2785**	TRW 25683 20,4 + WE / + WK TRW 25683 20,4 + WE / + WK Ceramic
			→	+ eFSB; +PR 1KE / 1KR / 2EC / 2EJ / 2EL		**13.0460-7293.2** **13.0470-7293.2**	**607293** **LD7293**	ATE 25008 16,3 - WE / - WK ATE 25008 16,3 - WE / - WK Ceramic
			→	+PR 1KJ / 1KY / 2ES / 2ET / 2EY / 2EZ		**13.0460-7294.2** **13.0470-7294.2**	**607294** **LD7294**	ATE 25009 16,4 - WE / - WK ATE 25009 16,4 - WE / - WK Ceramic
SQ2 TFSI quattro	221	08/18→	←	+PR 1LC / 1LJ		**13.0460-2617.2** **13.0470-2617.2**	**602617** **LD2617**	TRW + WK TRW + WK Ceramic
			←	+PR 1ZA / 1ZB / 1ZD / 1ZE / 1ZJ / 1ZK / 1ZU		**13.0460-2785.2** **13.0470-2785.2**	**602785** **LD2785**	TRW 25683 20,4 + WE / + WK TRW 25683 20,4 + WE / + WK Ceramic
			→	+ eFSB; +PR 1KE / 1KR / 2EC / 2EJ / 2EL		**13.0460-7293.2** **13.0470-7293.2**	**607293** **LD7293**	ATE 25008 16,3 - WE / - WK ATE 25008 16,3 - WE / - WK Ceramic
			→	+PR 1KJ / 1KY / 2ES / 2ET / 2EY / 2EZ		**13.0460-7294.2** **13.0470-7294.2**	**607294** **LD7294**	ATE 25009 16,4 - WE / - WK ATE 25009 16,4 - WE / - WK Ceramic

Warning Contact, brake pad wear

1.0 TFSI 1.4 TFSI 1.6 TDI 2.0 TDI 2.0 TDI quattro 2.0 TFSI quattro 30 TDI 30 TFSI 35 TDI 35 TDI quattro 35 TFSI 40 TFSI quattro SQ2 TFSI quattro	85 110 85 110 110 - 140 140 85 81 - 85 110 110 110 140 221	10/16→10/20 06/16→08/18 06/16→10/18 09/16→ 07/16→ 05/17→ 07/18→ 07/18→ 09/16→ 09/18→ 07/18→ 09/18→ 08/18→	←	+PR 1ZA / 1ZB / 1ZD / 1ZE / 1ZJ / 1ZK	1	**24.8190-0065.2**	**620065**	

© 2022 Continental Aftermarket & Services GmbH

	kW				! #			
AUDI - Q2 (GAB, GAG) 06/16→								
Brake Disc								
1.0 TFSI 1.4 TFSI 1.6 TDI 2.0 TDI 2.0 TDI quattro 2.0 TFSI quattro 30 TDI 30 TFSI 35 TDI 35 TDI quattro 35 TFSI 40 TFSI quattro	85 110 85 110 110 - 140 140 85 81 - 85 110 110 110 140	10/16→10/20 06/16→08/18 06/16→10/18 09/16→ 07/16→ 05/17→ 07/18→ 07/18→ 09/16→ 09/18→ 07/18→ 09/18→	←	+PR 1ZE / 1ZJ		**24.0125-0145.1**	**425145**	Ø 288 Brake Disc Thickness [mm] 25 Minimum thickness [mm] 22 Vented + S
			←	+PR 1ZA / 1ZB / 1ZD / 1ZK / 1ZU		**24.0125-0158.1**	**425158**	Ø 312 Brake Disc Thickness [mm] 25 Minimum thickness [mm] 22 Vented + S
			←	+PR 1ZA / 1ZD / 1ZK / 1ZU		**24.0325-0158.1**	**525158**	Ø 312 Brake Disc Thickness [mm] 25 Minimum thickness [mm] 22 Vented + S
			→	+PR 1KE / 1KR / 2EJ / 0N4 / 2EL		**24.0110-0356.1**	**410356**	Ø 272 Brake Disc Thickness [mm] 9.7 Minimum thickness [mm] 8 + S
			→	+PR 1KE / 1KR / 2EC / 2EJ / 2EL / 0N1		**24.0110-0409.1**	**410409**	Ø 272 Brake Disc Thickness [mm] 10 Minimum thickness [mm] 8 + S
			→	+PR 1KJ / 1KY / 2ES / 2ET / 2EY / 2EZ		**24.0122-0219.1**	**422219**	Ø 310 Brake Disc Thickness [mm] 22 Minimum thickness [mm] 20 Vented
SQ2 TFSI quattro	221	08/18→	←	+PR 1ZE / 1ZJ		**24.0125-0145.1**	**425145**	Ø 288 Brake Disc Thickness [mm] 25 Minimum thickness [mm] 22 Vented + S
			←	+PR 1ZA / 1ZB / 1ZD / 1ZK / 1ZU		**24.0125-0158.1**	**425158**	Ø 312 Brake Disc Thickness [mm] 25 Minimum thickness [mm] 22 Vented + S
			←	+PR 1LC / 1LJ		**24.0130-0225.1**	**430225**	Ø 340 Brake Disc Thickness [mm] 30 Minimum thickness [mm] 27 Vented + S
			←	+PR 1ZA / 1ZD / 1ZK / 1ZU		**24.0325-0158.1**	**525158**	Ø 312 Brake Disc Thickness [mm] 25 Minimum thickness [mm] 22 Vented + S
			→	+PR 1KE / 1KR / 2EJ / 0N4 / 2EL		**24.0110-0356.1**	**410356**	Ø 272 Brake Disc Thickness [mm] 9.7 Minimum thickness [mm] 8 + S
			→	+PR 1KE / 1KR / 2EC / 2EJ / 2EL / 0N1		**24.0110-0409.1**	**410409**	Ø 272 Brake Disc Thickness [mm] 10 Minimum thickness [mm] 8 + S
			→	+PR 1KJ / 1KY / 2ES / 2ET / 2EY / 2EZ		**24.0122-0219.1**	**422219**	Ø 310 Brake Disc Thickness [mm] 22 Minimum thickness [mm] 20 Vented
Sensor, wheel speed								
1.0 TFSI 30 TFSI	85 85	10/16→10/20 07/18→10/20	←			**24.0711-5273.3**	**360303**	
			←			**24.0711-5274.3**	**360304**	
			→	→ 07/20	2	**24.0711-6337.3**	**360390**	
1.4 TFSI 1.6 TDI	110 85	06/16→08/18 06/16→10/18	←			**24.0711-5273.3**	**360303**	
			←			**24.0711-5274.3**	**360304**	
			→		2	**24.0711-6337.3**	**360390**	
2.0 TDI 30 TDI 35 TDI 35 TFSI	110 85 110 110	09/16→ 07/18→ 09/16→ 07/18→	←	→ 10/20;		**24.0711-5273.3**	**360303**	
			←	→ 10/20;		**24.0711-5274.3**	**360304**	
			→	→ 07/20	2	**24.0711-6337.3**	**360390**	
2.0 TDI quattro 2.0 TFSI quattro 35 TDI quattro 40 TFSI quattro SQ2 TFSI quattro	110 140 110 140 221	09/16→ 05/17→ 09/18→ 09/18→ 08/18→	←	→ 10/20;		**24.0711-5273.3**	**360303**	
			←	→ 10/20;		**24.0711-5274.3**	**360304**	
			→	→ 10/19;		**24.0711-5401.3**	**360330**	
			→	11/19→;		**24.0711-5401.3**	**360330**	
			→	→ 10/19;		**24.0711-5402.3**	**360331**	
			→	11/19→;		**24.0711-5402.3**	**360331**	
2.0 TDI quattro	140	07/16→08/18	←			**24.0711-5273.3**	**360303**	
			←			**24.0711-5274.3**	**360304**	
			→			**24.0711-5401.3**	**360330**	

	kW				! #			
AUDI - Q2 (GAB, GAG) 06/16→								
Sensor, wheel speed								
2.0 TDI quattro	140	07/16→08/18	➡			**24.0711-5402.3**	**360331**	
30 TFSI	81	08/20→	⬅	→ 10/20;		**24.0711-5273.3**	**360303**	
			⬅	→ 10/20;		**24.0711-5274.3**	**360304**	
Control Element, parking brake caliper								
1.0 TFSI 1.4 TFSI 1.6 TDI 2.0 TDI 2.0 TDI quattro 2.0 TFSI quattro 30 TDI 30 TFSI 35 TDI 35 TDI quattro 35 TFSI 40 TFSI quattro SQ2 TFSI quattro	85 110 85 110 110 - 140 140 85 81 - 85 110 110 110 140 221	10/16→10/20 06/16→08/18 06/16→10/18 09/16→ 07/16→ 05/17→ 07/18→ 07/18→ 09/16→ 09/18→ 07/18→ 09/18→ 08/18→	➡	+PR 1KJ; +PR 1KR; +PR 1KY; +PR 2EC;		**11.9282-1001.3**	**250159**	ATE
			➡	+PR 1KJ; +PR 1KR; +PR 1KY; +PR 2EC;		**11.9282-1002.3**	**250160**	ATE
AUDI - Q3 (8UB, 8UG) 06/11→12/18								
Guide Bolt, brake caliper								
1.4 TFSI 1.4 TFSi Flex 2.0 TDI 2.0 TDI quattro 2.0 TFSI 2.0 TFSI quattro	92 110 88 - 135 110 - 135 132 132 - 162	07/16→10/18 02/16→10/18 11/14→10/18 11/14→10/18 05/15→10/18 11/14→10/18		+PR 1LJ / 1ZD	2	**11.8171-0008.1**	**990049**	ATE
1.4 TSI 2.0 TDI 2.0 TDI quattro 2.0 TFSI quattro	110 100 - 130 103 - 130 125 - 155	10/13→10/18 06/11→10/18 06/11→10/18 06/11→10/18	⬅	+PR 1LJ / 1ZD	2	**11.8171-0008.1**	**990049**	ATE
Brake Disc								
1.4 TFSI 2.0 TDI 2.0 TDI quattro 2.0 TFSI 2.0 TFSI quattro	92 88 - 135 110 - 135 132 132 - 162	07/16→10/18 11/14→10/18 11/14→10/18 05/15→10/18 11/14→10/18	⬅	+PR 1LJ / 1ZD		**24.0125-0158.1** **24.0325-0158.1**	**425158** **525158**	Ø 312 Brake Disc Thickness [mm] 25 Minimum thickness [mm] 22 Vented + S Ø 312 Brake Disc Thickness [mm] 25 Minimum thickness [mm] 22 Vented + S
			➡	+PR 1KU; + eFSB		**24.0112-0210.1**	**412210**	Ø 300 Brake Disc Thickness [mm] 12 Minimum thickness [mm] 10 + S
1.4 TFSi Flex	110	02/16→10/18	⬅	+PR 1LJ / 1ZD		**24.0125-0158.1**	**425158**	Ø 312 Brake Disc Thickness [mm] 25 Minimum thickness [mm] 22 Vented + S
			➡	+PR 1KU; + eFSB		**24.0112-0210.1**	**412210**	Ø 300 Brake Disc Thickness [mm] 12 Minimum thickness [mm] 10 + S
1.4 TSI 2.0 TDI 2.0 TDI quattro 2.0 TFSI quattro	110 100 - 130 103 - 130 125 - 155	10/13→10/18 06/11→10/18 06/11→10/18 06/11→10/18	⬅	+PR 1LJ / 1ZD		**24.0125-0158.1** **24.0325-0158.1**	**425158** **525158**	Ø 312 Brake Disc Thickness [mm] 25 Minimum thickness [mm] 22 Vented + S Ø 312 Brake Disc Thickness [mm] 25 Minimum thickness [mm] 22 Vented + S
			➡	+PR 1KU; 11/14→		**24.0112-0210.1**	**412210**	Ø 300 Brake Disc Thickness [mm] 12 Minimum thickness [mm] 10 + S
RS 2.5 quattro RS performance 2.5 quattro	228 270	10/13→10/18 01/15→10/18	➡	+PR 2EA / 2EJ; + eFSB		**24.0122-0219.1**	**422219**	Ø 310 Brake Disc Thickness [mm] 22 Minimum thickness [mm] 20 Vented

© 2022 Continental Aftermarket & Services GmbH

	kW				! #			
AUDI - Q3 (8UB, 8UG) 06/11→12/18								
Brake Disc								
RS 2.5 quattro	250	05/13→10/18	➡	03/15→; +PR 2EA / 2EJ; + eFSB		**24.0122-0219.1**	**422219**	Ø 310 Brake Disc Thickness [mm] 22 Minimum thickness [mm] 20 Vented
Sensor, wheel speed								
2.0 TDI quattro	103 - 135	06/11→10/18	➡	+PR 7X5 / 8A3;		**24.0711-5401.3**	**360330**	
2.0 TFSI quattro	125 - 162	06/11→10/18	➡	+PR 7X5 / 8A3;		**24.0711-5402.3**	**360331**	
AUDI - Q3 (F3B) 07/18→								
Brake Caliper								
2.5 RS quattro	294	10/19→	➡	+PR 1KF;		**24.6242-7017.5**	**241185**	ATE without holder + eFSB
			➡	+PR 1KF;		**24.6242-7018.5**	**241186**	ATE without holder + eFSB
35 TDI	110	09/18→	⬅	+PR 1ZA / 1ZD / 1ZK / 1ZL;		**24.3571-1801.5**	**241387**	without holder
35 TDI quattro	110	09/18→	⬅	+PR 1ZA / 1ZD / 1ZK / 1ZL;		**24.3571-1802.5**	**241388**	without holder
35 TFSI	110	08/18→	⬅	+PR 1LA / 1LB;		**24.3601-1727.5**	**240786**	TRW without holder
35 TFSI Mild Hybrid	110	11/19→	⬅	+PR 1LA / 1LB;		**24.3601-1728.5**	**240787**	TRW without holder
40 TDI quattro	140 - 147	10/18→	➡	+PR 1KZ;		**24.6242-7001.5**	**241335**	ATE + EMot / without holder + eFSB
40 TFSI quattro	140	07/18→	➡	+PR 1KZ;		**24.6242-7002.5**	**241336**	ATE + EMot / without holder + eFSB
45 TFSI	180	01/21→	➡	+PR 1KU / 2EM;		**24.6242-7005.5**	**241337**	ATE + EMot / without holder + eFSB
45 TFSI e	110	11/20→	➡	+PR 1KU / 2EM;		**24.6242-7006.5**	**241338**	ATE + EMot / without holder + eFSB
45 TFSI quattro	169	07/18→						
Brake Pad Set, disc brake								
35 TDI	110	09/18→	⬅	+PR 1LA / 1LG		**13.0460-2617.2** **13.0470-2617.2**	**602617** **LD2617**	TRW + WK TRW + WK Ceramic
35 TDI quattro	110	09/18→						
35 TFSI	110	08/18→						
35 TFSI Mild Hybrid	110	11/19→	⬅	+PR 1ZA / 1ZD / 1ZK / 1ZL		**13.0460-2785.2** **13.0470-2785.2**	**602785** **LD2785**	TRW 25683 20,4 + WE / + WK TRW 25683 20,4 + WE / + WK Ceramic
40 TDI quattro	140	10/18→						
40 TFSI quattro	140	07/18→						
45 TFSI quattro	169	07/18→						
			⬅	11/20→; +PR 1ZL		**13.0470-2609.2**	**LD2609**	TRW + WE / - WK Ceramic
			➡	+PR 1KU / 1KZ / 2EM / 2ER / 2ET / 2EY / 2EV		**13.0460-7294.2** **13.0470-7294.2**	**607294** **LD7294**	ATE 25009 16,4 - WE / - WK ATE 25009 16,4 - WE / - WK Ceramic
40 TDI quattro	147	11/20→	⬅	+PR 1LA / 1LG		**13.0460-2617.2** **13.0470-2617.2**	**602617** **LD2617**	TRW + WK TRW + WK Ceramic
45 TFSI	180	01/21→						
45 TFSI e	110	11/20→						
			⬅	+PR 1ZA / 1ZD / 1ZK / 1ZL		**13.0460-2785.2** **13.0470-2785.2**	**602785** **LD2785**	TRW 25683 20,4 + WE / + WK TRW 25683 20,4 + WE / + WK Ceramic
			⬅	+PR 1ZL		**13.0470-2609.2**	**LD2609**	TRW + WE / - WK Ceramic
			➡	+PR 1KU / 1KZ / 2EM / 2ER / 2ET / 2EY / 2EV		**13.0460-7294.2** **13.0470-7294.2**	**607294** **LD7294**	ATE 25009 16,4 - WE / - WK ATE 25009 16,4 - WE / - WK Ceramic
Warning Contact, brake pad wear								
35 TDI	110	09/18→	⬅	+PR 1ZA / 1ZD / 1ZK / 1ZL	1	**24.8190-0065.2**	**620065**	
35 TDI quattro	110	09/18→						
35 TFSI	110	08/18→						
35 TFSI Mild Hybrid	110	11/19→						
40 TDI quattro	140 - 147	10/18→						
40 TFSI quattro	140	07/18→						
45 TFSI	180	01/21→						
45 TFSI e	110	11/20→						
45 TFSI quattro	169	07/18→						
Brake Disc								
2.5 RS quattro	294	10/19→	➡	+PR 1KD / 1KF / 1KK / 1KI		**24.0122-0219.1**	**422219**	Ø 310 Brake Disc Thickness [mm] 22 Minimum thickness [mm] 20 Vented
35 TDI	110	09/18→	⬅	+PR 1ZA / 1ZD / 1ZL		**24.0125-0158.1**	**425158**	Ø 312 Brake Disc Thickness [mm] 25 Minimum thickness [mm] 22 Vented + S
35 TDI quattro	110	09/18→						
35 TFSI	110	08/18→						
35 TFSI Mild Hybrid	110	11/19→						

	kW				! #			
AUDI - Q3 (F3B) 07/18→								
Brake Disc								
40 TDI quattro 40 TFSI quattro 45 TFSI 45 TFSI e 45 TFSI quattro	140 - 147 140 180 110 169	10/18→ 07/18→ 01/21→ 11/20→ 07/18→	←	+PR 1LA / 1LB / 1LG		**24.0130-0225.1**	**430225**	Ø 340 Brake Disc Thickness [mm] 30 Minimum thickness [mm] 27 Vented + S
			→	+PR 1KU / 2EM		**24.0112-0210.1**	**412210**	Ø 300 Brake Disc Thickness [mm] 12 Minimum thickness [mm] 10 + S
			→	+PR 1KZ / 2ER / 2ET / 2EY / 2EV		**24.0122-0219.1**	**422219**	Ø 310 Brake Disc Thickness [mm] 22 Minimum thickness [mm] 20 Vented
Sensor, wheel speed								
2.5 RS quattro	294	10/19→	←			**24.0711-5273.3**	**360303**	
			←			**24.0711-5274.3**	**360304**	
			→	→ 11/19;		**24.0711-5401.3**	**360330**	
			→	12/19→;		**24.0711-5401.3**	**360330**	
			→	12/19→;		**24.0711-5402.3**	**360331**	
			→	→ 11/19;		**24.0711-5402.3**	**360331**	
35 TDI 35 TDI quattro 35 TFSI 35 TFSI Mild Hybrid 40 TDI quattro 40 TFSI quattro 45 TFSI quattro	110 110 110 110 140 140 169	09/18→ 09/18→ 08/18→ 11/19→ 10/18→ 07/18→ 07/18→	←			**24.0711-5273.3**	**360303**	
			←			**24.0711-5274.3**	**360304**	
			→			**24.0711-5401.3**	**360330**	
			→	12/19→;		**24.0711-5401.3**	**360330**	
			→			**24.0711-5402.3**	**360331**	
			→	12/19→;		**24.0711-5402.3**	**360331**	
			→		2	**24.0711-6337.3**	**360390**	
40 TDI quattro 45 TFSI	147 180	11/20→ 01/21→	←			**24.0711-5273.3**	**360303**	
			←			**24.0711-5274.3**	**360304**	
			→			**24.0711-5401.3**	**360330**	
			→			**24.0711-5402.3**	**360331**	
			→		2	**24.0711-6337.3**	**360390**	
45 TFSI e	110	11/20→	→			**24.0711-5401.3**	**360330**	
			→			**24.0711-5402.3**	**360331**	
Control Element, parking brake caliper								
2.5 RS quattro 35 TDI 35 TDI quattro 35 TFSI 35 TFSI Mild Hybrid 40 TDI quattro 40 TFSI quattro 45 TFSI 45 TFSI e 45 TFSI quattro	294 110 110 110 110 140 - 147 140 180 110 169	10/19→ 09/18→ 09/18→ 08/18→ 11/19→ 10/18→ 07/18→ 01/21→ 11/20→ 07/18→	→			**11.9282-1001.3**	**250159**	ATE
			→			**11.9282-1002.3**	**250160**	ATE
AUDI - Q3 Sportback (F3N) 06/19→								
Brake Caliper								
2.5 RS quattro	294	10/19→	→	+PR 1KF;		**24.6242-7017.5**	**241185**	ATE without holder + eFSB
			→	+PR 1KF;		**24.6242-7018.5**	**241186**	ATE without holder + eFSB
35 TDI 35 TDI quattro 35 TFSI 35 TFSI Mild Hybrid 40 TDI quattro 40 TFSI quattro 45 TFSI 45 TFSI e 45 TFSI quattro	110 110 110 110 140 - 147 140 180 110 169	11/19→ 09/19→ 09/19→ 11/19→ 07/19→ 11/19→ 01/21→ 11/20→ 06/19→	←	+PR 1ZA / 1ZD / 1ZK / 1ZL;		**24.3571-1801.5**	**241387**	without holder
			←	+PR 1ZA / 1ZD / 1ZK / 1ZL;		**24.3571-1802.5**	**241388**	without holder
			←	+PR 1LA / 1LB;		**24.3601-1727.5**	**240786**	TRW without holder
			←	+PR 1LA / 1LB;		**24.3601-1728.5**	**240787**	TRW without holder
			→	+PR 1KZ;		**24.6242-7001.5**	**241335**	ATE + EMot / without holder + eFSB
			→	+PR 1KZ;		**24.6242-7002.5**	**241336**	ATE + EMot / without holder + eFSB
			→	+PR 1KU / 2EM;		**24.6242-7005.5**	**241337**	ATE + EMot / without holder + eFSB
			→	+PR 1KU / 2EM;		**24.6242-7006.5**	**241338**	ATE + EMot / without holder + eFSB

© 2022 Continental Aftermarket & Services GmbH

	kW				! #			
AUDI - Q3 Sportback (F3N) 06/19→								
Brake Pad Set, disc brake								
35 TDI 35 TDI quattro 35 TFSI 35 TFSI Mild Hybrid 40 TDI quattro 40 TFSI quattro 45 TFSI quattro	110 110 110 110 140 - 147 140 169	11/19→ 09/19→ 09/19→ 11/19→ 07/19→ 11/19→ 06/19→	←	+PR 1LA / 1LG		**13.0460-2617.2** **13.0470-2617.2**	**602617** **LD2617**	TRW + WK TRW + WK Ceramic
			←	+PR 1ZA / 1ZD / 1ZK / 1ZL		**13.0460-2785.2** **13.0470-2785.2**	**602785** **LD2785**	TRW 25683 20,4 + WE / + WK TRW 25683 20,4 + WE / + WK Ceramic
			←	11/20→; +PR 1ZL		**13.0470-2609.2**	**LD2609**	TRW + WE / - WK Ceramic
			→	+PR 1KU / 1KZ / 2EM / 2ER / 2ET / 2EY / 2EV		**13.0460-7294.2** **13.0470-7294.2**	**607294** **LD7294**	ATE 25009 16,4 - WE / - WK ATE 25009 16,4 - WE / - WK Ceramic
45 TFSI 45 TFSI e	180 110	01/21→ 11/20→	←	+PR 1LA / 1LG		**13.0460-2617.2** **13.0470-2617.2**	**602617** **LD2617**	TRW + WK TRW + WK Ceramic
			←	+PR 1ZA / 1ZD / 1ZK / 1ZL		**13.0460-2785.2** **13.0470-2785.2**	**602785** **LD2785**	TRW 25683 20,4 + WE / + WK TRW 25683 20,4 + WE / + WK Ceramic
			←	+PR 1ZL		**13.0470-2609.2**	**LD2609**	TRW + WE / - WK Ceramic
			→	+PR 1KU / 1KZ / 2EM / 2ER / 2ET / 2EY / 2EV		**13.0460-7294.2** **13.0470-7294.2**	**607294** **LD7294**	ATE 25009 16,4 - WE / - WK ATE 25009 16,4 - WE / - WK Ceramic
Warning Contact, brake pad wear								
35 TDI 35 TDI quattro 35 TFSI 35 TFSI Mild Hybrid 40 TDI quattro 40 TFSI quattro 45 TFSI 45 TFSI e 45 TFSI quattro	110 110 110 110 140 - 147 140 180 110 169	11/19→ 09/19→ 09/19→ 11/19→ 07/19→ 11/19→ 01/21→ 11/20→ 06/19→	←	+PR 1ZA / 1ZD / 1ZK / 1ZL	1	**24.8190-0065.2**	**620065**	
Brake Disc								
2.5 RS quattro	294	10/19→	→	+PR 1KD / 1KF / 1KK / 1KI		**24.0122-0219.1**	**422219**	Ø 310 Brake Disc Thickness [mm] 22 Minimum thickness [mm] 20 Vented
35 TDI 35 TDI quattro 35 TFSI 35 TFSI Mild Hybrid 40 TDI quattro 40 TFSI quattro 45 TFSI 45 TFSI e 45 TFSI quattro	110 110 110 110 140 - 147 140 180 110 169	11/19→ 09/19→ 09/19→ 11/19→ 07/19→ 11/19→ 01/21→ 11/20→ 06/19→	←	+PR 1ZA / 1ZD / 1ZL		**24.0125-0158.1**	**425158**	Ø 312 Brake Disc Thickness [mm] 25 Minimum thickness [mm] 22 Vented + S
			←	+PR 1LA / 1LB / 1LG		**24.0130-0225.1**	**430225**	Ø 340 Brake Disc Thickness [mm] 30 Minimum thickness [mm] 27 Vented + S
			→	+PR 1KU / 2EM		**24.0112-0210.1**	**412210**	Ø 300 Brake Disc Thickness [mm] 12 Minimum thickness [mm] 10 + S
			→	+PR 1KZ / 2ER / 2ET / 2EY / 2EV		**24.0122-0219.1**	**422219**	Ø 310 Brake Disc Thickness [mm] 22 Minimum thickness [mm] 20 Vented
Sensor, wheel speed								
2.5 RS quattro	294	10/19→	←			**24.0711-5273.3**	**360303**	
			←			**24.0711-5274.3**	**360304**	
			→	→ 11/19;		**24.0711-5401.3**	**360330**	
			→	12/19→;		**24.0711-5401.3**	**360330**	
			→	12/19→;		**24.0711-5402.3**	**360331**	
			→	→ 11/19;		**24.0711-5402.3**	**360331**	
35 TDI 35 TDI quattro 35 TFSI 35 TFSI Mild Hybrid 40 TDI quattro 40 TFSI quattro 45 TFSI quattro	110 110 110 110 140 140 169	11/19→ 09/19→ 09/19→ 11/19→ 07/19→ 11/19→ 06/19→	←			**24.0711-5273.3**	**360303**	
			←			**24.0711-5274.3**	**360304**	
			→			**24.0711-5401.3**	**360330**	
			→	12/19→;		**24.0711-5401.3**	**360330**	
			→			**24.0711-5402.3**	**360331**	
			→	12/19→;		**24.0711-5402.3**	**360331**	
			→		2	**24.0711-6337.3**	**360390**	
40 TDI quattro 45 TFSI	147 180	09/20→ 01/21→	←			**24.0711-5273.3**	**360303**	

	kW				! #			
AUDI - Q3 Sportback (F3N) 06/19→								
Sensor, wheel speed								
40 TDI quattro 45 TFSI	147 180	09/20→ 01/21→	←			24.0711-5274.3	360304	
			→			24.0711-5401.3	360330	
			→			24.0711-5402.3	360331	
			→		2	24.0711-6337.3	360390	
45 TFSI e	110	11/20→	→			24.0711-5401.3	360330	
			→			24.0711-5402.3	360331	
Control Element, parking brake caliper								
2.5 RS quattro 35 TDI 35 TDI quattro 35 TFSI 35 TFSI Mild Hybrid 40 TDI quattro 40 TFSI quattro 45 TFSI 45 TFSI e 45 TFSI quattro	294 110 110 110 110 140 - 147 140 180 110 169	10/19→ 11/19→ 09/19→ 09/19→ 11/19→ 07/19→ 11/19→ 01/21→ 11/20→ 06/19→	→			11.9282-1001.3	250159	ATE
			→			11.9282-1002.3	250160	ATE
AUDI - Q5 (FYB, FYG) 05/16→								
Brake Caliper								
2.0 TDI	100 - 110	01/17→11/20	←	+PR 1LC;		24.4426-7017.5	230165	ATE
2.0 TDI quattro	120 - 140	06/16→08/18	←	+PR 1LC;		24.4426-7018.5	230166	ATE
2.0 TFSI quattro	183 - 185	06/16→	←	+PR 1LE;		24.4426-7019.5	230161	ATE
			←	+PR 1LE;		24.4426-7020.5	230162	ATE
3.0 TDI quattro	210	07/17→11/20						
30 TDI Mild Hybrid	100	01/19→						
35 TDI Mild Hybrid	120	09/19→11/20						
35 TDI quattro	120	08/18→11/20						
40 TDI Mild Hybrid quattro	150	11/19→11/20						
40 TDI quattro	140	10/18→						
40 TFSI Mild Hybrid quattro	150	10/21→						
45 TDI quattro	170	08/18→11/20						
45 TFSI Mild Hybrid quattro	180 - 195	12/18→						
50 TDI Mild Hybrid quattro	210	06/20→						
50 TDI quattro	210	03/19→11/20						
50 TFSI e quattro	185 - 220	04/19→						
55 TFSI e quattro	185 - 270	08/19→						
SQ5 TDI Mild Hybrid	251	01/21→						
SQ5 TDI Mild Hybrid quattro	255	02/19→						
SQ5 TFSI quattro	260	11/16→						
Brake Pad Set, disc brake								
2.0 TDI	100 - 110	01/17→11/20	←	+PR 1LG		13.0470-4700.2	LD4700	BRE + WE / - WK Ceramic
2.0 TDI quattro	120 - 140	06/16→08/18						
2.0 TFSI quattro	183 - 185	06/16→						
3.0 TDI quattro	210	07/17→11/20						
30 TDI Mild Hybrid	100	01/19→						
35 TDI Mild Hybrid	120	09/19→11/20						
35 TDI quattro	120	08/18→11/20						
40 TDI Mild Hybrid quattro	150	11/19→11/20						
40 TDI quattro	140	10/18→						
40 TFSI Mild Hybrid quattro	150	10/21→						
45 TDI quattro	170	08/18→11/20						
45 TFSI Mild Hybrid quattro	180 - 195	12/18→						
50 TDI Mild Hybrid quattro	210	06/20→						
50 TDI quattro	210	03/19→11/20						
50 TFSI e quattro	185 - 220	04/19→						
55 TFSI e quattro	185 - 195	08/19→						

© 2022 Continental Aftermarket & Services GmbH

	kW				! #			
AUDI - Q5 Sportback (FYT) 11/20→								
Brake Caliper								
35 TDI	120	04/21→	←	+PR 1LC;		**24.4426-7017.5**	**230165**	ATE
40 TDI quattro	150	11/20→	←	+PR 1LC;		**24.4426-7018.5**	**230166**	ATE
40 TFSI Mild Hybrid quattro	150	10/21→	←	+PR 1LE;		**24.4426-7019.5**	**230161**	ATE
45 TFSI quattro	195	11/20→	←	+PR 1LE;		**24.4426-7020.5**	**230162**	ATE
50 TDI quattro	210	11/20→						
50 TFSI e quattro	195	02/21→						
55 TFSI e quattro	195	06/21→						
SQ5 TDI	251	02/21→						
Brake Pad Set, disc brake								
35 TDI	120	04/21→	←	+PR 1LG		**13.0470-4700.2**	**LD4700**	BRE + WE / - WK Ceramic
40 TDI quattro	150	11/20→						
40 TFSI Mild Hybrid quattro	150	10/21→						
45 TFSI quattro	195	11/20→						
50 TDI quattro	210	11/20→						
50 TFSI e quattro	195	02/21→						
55 TFSI e quattro	195	06/21→						
AUDI - Q5 Van (FYB, FYG) 05/16→								
Brake Caliper								
3.0 SQ5 TDI Mild Hybrid quattro	255	02/19→11/20	←	+PR 1LC;		**24.4426-7017.5**	**230165**	ATE
3.0 TDI quattro	210	07/17→11/20	←	+PR 1LC;		**24.4426-7018.5**	**230166**	ATE
			←	+PR 1LE;		**24.4426-7019.5**	**230161**	ATE
			←	+PR 1LE;		**24.4426-7020.5**	**230162**	ATE
Brake Pad Set, disc brake								
3.0 TDI quattro	210	07/17→11/20	←	+PR 1LG		**13.0470-4700.2**	**LD4700**	BRE + WE / - WK Ceramic
AUDI - Q7 (4LB) 03/06→01/16								
Sensor, wheel speed								
3.0 TDI quattro	150 - 176	11/07→08/15	←	→ 05/10;		**24.0711-5401.3**	**360330**	
3.0 TFSI quattro	200 - 245	05/10→08/15	←	→ 05/10;		**24.0711-5402.3**	**360331**	
4.2 TDI quattro	250	05/09→08/15	→			**24.0711-5401.3**	**360330**	
			→			**24.0711-5402.3**	**360331**	
3.0 TDI quattro	155 - 171	03/06→05/10	←			**24.0711-5401.3**	**360330**	
3.6 FSI quattro	206	08/06→05/10	←			**24.0711-5402.3**	**360331**	
4.2 FSI quattro	257	03/06→05/10	→			**24.0711-5401.3**	**360330**	
4.2 quattro	231	03/06→12/10						
4.2 TDI quattro	240	03/07→06/09	→			**24.0711-5402.3**	**360331**	
6.0 TDI quattro	368	09/08→05/14						
3.0 TDI quattro	180	05/11→08/15	→			**24.0711-5401.3**	**360330**	
3.0 TFSI quattro	206	05/11→08/15	→			**24.0711-5402.3**	**360331**	
Accessory Kit, parking brake shoes								
3.0 TDI quattro	150 - 180	03/06→08/15		+PR 1KF / 2EA / 1KD / 2EF		**03.0137-9700.2**	**669700**	
3.0 TFSI quattro	200 - 245	05/10→08/15						
3.6 FSI quattro	206	08/06→05/10						
4.2 FSI quattro	257	03/06→05/10						
4.2 quattro	231	03/06→12/10						
4.2 TDI quattro	240 - 250	03/07→08/15						
6.0 TDI quattro	368	09/08→05/14						
AUDI - Q7 Van (4LB) 03/06→01/16								
Sensor, wheel speed								
3.0 TDI quattro	150 - 180	11/10→08/15	→			**24.0711-5401.3**	**360330**	
			→			**24.0711-5402.3**	**360331**	
3.0 TDI quattro	155 - 171	03/06→05/10	←			**24.0711-5401.3**	**360330**	
3.6 FSI quattro	206	08/06→05/10	←			**24.0711-5402.3**	**360331**	
4.2 FSI quattro	257	08/06→05/10	→			**24.0711-5401.3**	**360330**	
4.2 TDI quattro	240	03/07→06/09						
6.0 TDI quattro	368	09/08→05/14	→			**24.0711-5402.3**	**360331**	
3.0 TDI quattro	176	11/07→05/12	←	→ 05/10;		**24.0711-5401.3**	**360330**	
3.0 TFSI quattro	245	05/10→08/15						
4.2 TDI quattro	250	03/07→08/15	←	→ 05/10;		**24.0711-5402.3**	**360331**	

	kW				! #			
AUDI - Q7 Van (4LB) 03/06→01/16								
Sensor, wheel speed								
3.0 TDI quattro	176	11/07→05/12				**24.0711-5401.3**	**360330**	
3.0 TFSI quattro 4.2 TDI quattro	245 250	05/10→08/15 03/07→08/15				**24.0711-5402.3**	**360331**	
Accessory Kit, parking brake shoes								
3.0 TDI quattro	150 - 180	03/06→08/15		+PR 1KF / 2EA / 1KD / 2EF		**03.0137-9700.2**	**669700**	
3.0 TFSI quattro	245	05/10→08/15						
3.6 FSI quattro	206	08/06→05/10						
4.2 FSI quattro	257	08/06→05/10						
4.2 TDI quattro	240 - 250	03/07→08/15						
6.0 TDI quattro	368	09/08→05/14						
AUDI - TT (8J3) 07/06→01/15								
Guide Bolt, brake caliper								
1.8 TFSI	118	06/08→06/14		+PR 1LJ	2	**11.8171-0008.1**	**990049**	ATE
2.0 TDI quattro	125	06/08→06/14		+PR 1LL	2	**11.8171-0008.1**	**990049**	ATE
2.0 TFSI quattro	147	06/08→06/10		+PR 1LM	2	**11.8171-0008.1**	**990049**	ATE
2.0 TTS quattro	195	05/08→06/14		+PR 1LK	2	**11.8171-0008.1**	**990049**	ATE
2.0 TFSI	147	08/06→06/10		+PR 1LJ	2	**11.8171-0008.1**	**990049**	ATE
3.2 V6 quattro	184	08/06→06/10		+PR 1LL	2	**11.8171-0008.1**	**990049**	ATE
				+PR 1LM	2	**11.8171-0008.1**	**990049**	ATE
				+PR 1LK / 1LM	2	**11.8171-0008.1**	**990049**	ATE
2.0 TFSI	155	05/10→06/14		+PR 1LJ	2	**11.8171-0008.1**	**990049**	ATE
2.0 TFSI quattro	155	05/10→06/14		+PR 1LL	2	**11.8171-0008.1**	**990049**	ATE
				+PR 1LM	2	**11.8171-0008.1**	**990049**	ATE
2.0 TTS quattro	200	05/08→06/14		+PR 1LN	2	**11.8171-0008.1**	**990049**	ATE
Brake Disc								
1.8 TFSI	118	06/08→06/14		+PR 1LJ / 1LL		**24.0125-0158.1**	**425158**	Ø 312 Brake Disc Thickness [mm] 25 Minimum thickness [mm] 22 Vented + S
2.0 TDI quattro	125	06/08→06/14						
2.0 TFSI	147 - 155	08/06→06/14						
2.0 TFSI quattro	147 - 155	06/08→06/14				**24.0325-0158.1**	**525158**	Ø 312 Brake Disc Thickness [mm] 25 Minimum thickness [mm] 22 Vented + S
3.2 V6 quattro	184	08/06→06/10						
2.0 TTS quattro	195	05/08→06/14		+PR 1LJ / 1LL		**24.0125-0158.1**	**425158**	Ø 312 Brake Disc Thickness [mm] 25 Minimum thickness [mm] 22 Vented + S
AUDI - TT (8N3) 10/98→12/06								
Guide Bolt, brake caliper								
1.8 T	110 - 140	10/98→06/06		+PR 1LD / 1LT / 1LV	2	**11.8171-0008.1**	**990049**	ATE
1.8 T quattro	132 - 180	10/98→06/06						
3.2 VR6 quattro	184	07/03→06/06			2	**11.8171-0008.1**	**990049**	ATE
Brake Disc								
1.8 T	110 - 140	10/98→06/06		+PR 1KK / 2EK		**24.0109-0123.1**	**409123**	Ø 230 Brake Disc Thickness [mm] 9 Minimum thickness [mm] 7 + S
AUDI - TT (FV3, FVP) 07/14→								
Brake Master Cylinder								
1.8 TFSI	132	07/15→08/18		for left-hand drive vehicles		**24.4123-1719.3**	**011017**	TRW Ø 23.8 without brake fluid reservoir
2.0 TDI	135	07/14→						
2.0 TDI quattro	135	01/17→						
2.0 TFSI	169	07/14→						
2.0 TFSI quattro	162 - 169	07/14→						
2.0 TTS quattro	210 - 228	11/14→						
40 TFSI	145	07/18→						
45 TFSI	180	07/18→						
45 TFSI quattro	180	07/18→						
TTS quattro	235	01/21→						

© 2022 Continental Aftermarket & Services GmbH

AUDI - TT (FV3, FVP) 07/14→

Brake Caliper

	kW				! #			
1.8 TFSI 2.0 TDI 2.0 TDI quattro 2.0 TFSI 2.0 TFSI quattro 2.0 TTS quattro 2.5 RS quattro 40 TFSI 45 TFSI 45 TFSI quattro TTS quattro	132 135 135 169 162 - 169 210 - 228 294 145 180 180 235	07/15→08/18 07/14→ 01/17→ 07/14→ 07/14→ 11/14→ 10/16→ 07/18→ 07/18→ 07/18→ 01/21→	←	+PR 1LJ / 1ZD / 1ZF / 1ZL;		**24.3571-1801.5**	**241387**	without holder
			←	+PR 1LJ / 1ZD / 1ZF / 1ZL;		**24.3571-1802.5**	**241388**	without holder
			←	+PR 1LK;		**24.4426-7001.5**	**230159**	ATE
			←	+PR 1LK;		**24.4426-7002.5**	**230160**	ATE
			→	+PR 1KZ;		**24.6238-7023.5**	**241241**	ATE without holder + eFSB
			→	+PR 1KZ;		**24.6238-7024.5**	**241242**	ATE without holder + eFSB
			→	+PR 1KE;		**24.6238-7047.5**	**241181**	ATE without holder + eFSB
			→	+PR 1KE;		**24.6238-7048.5**	**241182**	ATE without holder + eFSB
			→	+PR 2EF / 2ER;		**24.6242-7001.5**	**241335**	ATE + EMot / without holder + eFSB
			→	+PR 2EF / 2ER;		**24.6242-7002.5**	**241336**	ATE + EMot / without holder + eFSB
			→	+PR 2ET;		**24.6242-7017.5**	**241185**	ATE without holder + eFSB
			→	+PR 2ET;		**24.6242-7018.5**	**241186**	ATE without holder + eFSB

Brake Pad Set, disc brake

1.8 TFSI 2.0 TDI 2.0 TDI quattro 2.0 TFSI 2.0 TFSI quattro 2.0 TTS quattro 40 TFSI 45 TFSI 45 TFSI quattro	132 135 135 169 162 - 169 210 - 225 145 180 180	07/15→08/18 07/14→ 01/17→ 07/14→ 07/14→ 02/15→ 07/18→ 07/18→ 07/18→	←	+PR 1LJ / 1LP / 1ZD / 1ZF / 1ZL / 1ZT / 1ZV / 1ZW		**13.0460-2785.2**	**602785**	TRW 25683 20,4 + WE / + WK
			←	+PR 1LJ / 1ZD / 1ZF / 1ZL / 1LP / 1ZT / 1ZV / 1ZW		**13.0470-2785.2**	**LD2785**	TRW 25683 20,4 + WE / + WK Ceramic
			→	+PR 1KE; + eFSB; +PR 2EC		**13.0460-7293.2** **13.0470-7293.2**	**607293** **LD7293**	ATE 25008 16,3 - WE / - WK ATE 25008 16,3 - WE / - WK Ceramic
			→	+ eFSB; +PR 1KV / 2ED / 2EF / 2EG / 2EK / 2EN / 2ER / 2ET / 2EP		**13.0460-7294.2** **13.0470-7294.2**	**607294** **LD7294**	ATE 25009 16,4 - WE / - WK ATE 25009 16,4 - WE / - WK Ceramic
2.0 TTS quattro 2.5 RS quattro TTS quattro	228 294 235	11/14→ 10/16→ 01/21→	←	+PR 1LJ / 1LP / 1ZD / 1ZF / 1ZL / 1ZT / 1ZV / 1ZW		**13.0460-2785.2**	**602785**	TRW 25683 20,4 + WE / + WK
			→	+PR 1KE; + eFSB; +PR 2EC		**13.0460-7293.2**	**607293**	ATE 25008 16,3 - WE / - WK
			→	+ eFSB; +PR 1KV / 2ED / 2EF / 2EG / 2EK / 2EN / 2ER / 2ET / 2EP		**13.0460-7294.2**	**607294**	ATE 25009 16,4 - WE / - WK

Warning Contact, brake pad wear

1.8 TFSI 2.0 TDI 2.0 TDI quattro 2.0 TFSI 2.0 TFSI quattro 2.0 TTS quattro 40 TFSI 45 TFSI 45 TFSI quattro TTS quattro	132 135 135 169 162 - 169 210 - 228 145 180 180 235	07/15→08/18 07/14→ 01/17→ 07/14→ 07/14→ 11/14→ 07/18→ 07/18→ 07/18→ 01/21→	←	+PR 1LJ / 1ZD	1	**24.8190-0065.2**	**620065**	

Brake Disc

1.8 TFSI 2.0 TDI 2.0 TDI quattro 2.0 TFSI 2.0 TFSI quattro 2.0 TTS quattro 2.5 RS quattro 40 TFSI 45 TFSI 45 TFSI quattro TTS quattro	132 135 135 169 162 - 169 210 - 228 294 145 180 180 235	07/15→08/18 07/14→ 01/17→ 07/14→ 07/14→ 11/14→ 10/16→ 07/18→ 07/18→ 07/18→ 01/21→	←	+PR 1LJ / 1ZD / 1ZF / 1ZL / 1LP / 1ZT / 1ZV / 1ZW		**24.0125-0158.1**	**425158**	Ø 312 Brake Disc Thickness [mm] 25 Minimum thickness [mm] 22 Vented + S
			←	+PR 1LK / 1LH / 1LW		**24.0130-0225.1**	**430225**	Ø 340 Brake Disc Thickness [mm] 30 Minimum thickness [mm] 27 Vented + S
			→	+PR 1KZ / 1KE / 2EC		**24.0110-0356.1**	**410356**	Ø 272 Brake Disc Thickness [mm] 9.7 Minimum thickness [mm] 8 + S
			→	+ eFSB; +PR 1KV / 2ED / 2EN / 2EP		**24.0112-0210.1**	**412210**	Ø 300 Brake Disc Thickness [mm] 12 Minimum thickness [mm] 10 + S
			→	+PR 2EG / 2EK / 2ES / 2EF / 2ER / 2ET		**24.0122-0219.1**	**422219**	Ø 310 Brake Disc Thickness [mm] 22 Minimum thickness [mm] 20 Vented

Sensor, wheel speed

1.8 TFSI 2.0 TDI 2.0 TFSI	132 135 169	07/15→08/18 07/14→ 07/14→	←			**24.0711-5273.3**	**360303**	
			←			**24.0711-5274.3**	**360304**	

	kW				! #			
AUDI - TT (FV3, FVP) 07/14→								
Sensor, wheel speed								
40 TFSI 45 TFSI	145 180	07/18→ 07/18→			2	**24.0711-6337.3**	**360390**	
2.0 TDI quattro 2.0 TFSI quattro 2.0 TTS quattro 2.5 RS quattro 45 TFSI quattro TTS quattro	135 162 - 169 210 - 228 294 180 235	01/17→ 07/14→ 11/14→ 10/16→ 07/18→ 01/21→				**24.0711-5273.3** **24.0711-5274.3** **24.0711-5401.3** **24.0711-5402.3**	**360303** **360304** **360330** **360331**	
Control Element, parking brake caliper								
1.8 TFSI 2.0 TDI 2.0 TDI quattro 2.0 TFSI 2.0 TFSI quattro 2.0 TTS quattro 2.5 RS quattro 40 TFSI 45 TFSI 45 TFSI quattro TTS quattro	132 135 135 169 162 - 169 210 - 228 294 145 180 180 235	07/15→08/18 07/14→ 01/17→ 07/14→ 07/14→ 11/14→ 10/16→ 07/18→ 07/18→ 07/18→ 01/21→				**11.9282-1001.3** **11.9282-1002.3**	**250159** **250160**	ATE ATE
AUDI - TT Roadster (8J9) 03/07→06/14								
Guide Bolt, brake caliper								
1.8 TFSI 2.0 TDI quattro 2.0 TFSI quattro 2.0 TTS quattro	118 125 147 195	06/08→06/14 06/08→06/14 06/08→06/10 05/08→06/14		+PR 1LJ +PR 1LL +PR 1LM +PR 1LK	2 2 2 2	**11.8171-0008.1** **11.8171-0008.1** **11.8171-0008.1** **11.8171-0008.1**	**990049** **990049** **990049** **990049**	ATE ATE ATE ATE
2.0 TFSI	147	03/07→06/10		+PR 1LJ +PR 1LL +PR 1LK / 1LM +PR 1LM	2 2 2 2	**11.8171-0008.1** **11.8171-0008.1** **11.8171-0008.1** **11.8171-0008.1**	**990049** **990049** **990049** **990049**	ATE ATE ATE ATE
2.0 TFSI 2.0 TFSI quattro	155 155	05/10→06/14 05/10→06/14		+PR 1LJ +PR 1LL +PR 1LM	2 2 2	**11.8171-0008.1** **11.8171-0008.1** **11.8171-0008.1**	**990049** **990049** **990049**	ATE ATE ATE
2.0 TTS quattro	200	05/08→06/14		+PR 1LM +PR 1LN	2 2	**11.8171-0008.1** **11.8171-0008.1**	**990049** **990049**	ATE ATE
3.2 V6 quattro	184	03/07→06/10		+PR 1LJ +PR 1LL +PR 1LK / 1LM	2 2 2	**11.8171-0008.1** **11.8171-0008.1** **11.8171-0008.1**	**990049** **990049** **990049**	ATE ATE ATE
Brake Disc								
1.8 TFSI 2.0 TDI quattro 2.0 TFSI 2.0 TFSI quattro 3.2 V6 quattro	118 125 147 - 155 147 - 155 184	06/08→06/14 06/08→06/14 03/07→06/14 06/08→06/14 03/07→06/10		+PR 1LJ / 1LL		**24.0125-0158.1** **24.0325-0158.1**	**425158** **525158**	Ø 312 Brake Disc Thickness [mm] 25 Minimum thickness [mm] 22 Vented + S Ø 312 Brake Disc Thickness [mm] 25 Minimum thickness [mm] 22 Vented + S
2.0 TTS quattro	195	05/08→06/14		+PR 1LJ / 1LL		**24.0125-0158.1**	**425158**	Ø 312 Brake Disc Thickness [mm] 25 Minimum thickness [mm] 22 Vented + S
AUDI - TT Roadster (8N9) 10/99→12/06								
Guide Bolt, brake caliper								
1.8 T 1.8 T quattro	110 - 140 132 - 165	10/99→06/06 10/99→06/06		+PR 1LD / 1LT / 1LV	2	**11.8171-0008.1**	**990049**	ATE
3.2 VR6 quattro	184	07/03→06/06			2	**11.8171-0008.1**	**990049**	ATE
Brake Disc								
1.8 T	110 - 140	10/99→06/06		+PR 1KK / 2EK		**24.0109-0123.1**	**409123**	Ø 230 Brake Disc Thickness [mm] 9 Minimum thickness [mm] 7 + S

© 2022 Continental Aftermarket & Services GmbH

AUDI - TT Roadster (FV9, FVR) 11/14→

Brake Master Cylinder

	kW				! #			
1.8 TFSI 2.0 TDI 2.0 TDI quattro 2.0 TFSI 2.0 TFSI quattro 2.0 TTS quattro 40 TFSI 45 TFSI 45 TFSI quattro TTS TTS quattro	132 135 135 169 162 - 169 210 - 228 145 180 180 235 235	07/15→08/18 11/14→ 01/17→ 11/14→ 11/14→ 11/14→ 07/18→ 07/18→ 07/18→ 01/21→ 11/20→		for left-hand drive vehicles		**24.4123-1719.3**	**011017**	TRW Ø 23.8 without brake fluid reservoir

Brake Caliper

	kW				! #			
1.8 TFSI 2.0 TDI 2.0 TDI quattro 2.0 TFSI 2.0 TFSI quattro 2.0 TTS quattro 2.5 RS quattro 40 TFSI 45 TFSI 45 TFSI quattro TTS TTS quattro	132 135 135 169 162 - 169 210 - 228 294 145 180 180 235 235	07/15→08/18 11/14→ 01/17→ 11/14→ 11/14→ 11/14→ 10/16→ 07/18→ 07/18→ 07/18→ 01/21→ 11/20→	←	+PR 1LJ / 1ZD / 1ZF / 1ZL;		**24.3571-1801.5**	**241387**	without holder
			←	+PR 1LJ / 1ZD / 1ZF / 1ZL;		**24.3571-1802.5**	**241388**	without holder
			←	+PR 1LK;		**24.4426-7001.5**	**230159**	ATE
			←	+PR 1LK;		**24.4426-7002.5**	**230160**	ATE
			→	+PR 1KZ;		**24.6238-7023.5**	**241241**	ATE without holder + eFSB
			→	+PR 1KZ;		**24.6238-7024.5**	**241242**	ATE without holder + eFSB
			→	+PR 1KE;		**24.6238-7047.5**	**241181**	ATE without holder + eFSB
			→	+PR 1KE;		**24.6238-7048.5**	**241182**	ATE without holder + eFSB
			→	+PR 2EF / 2ER;		**24.6242-7001.5**	**241335**	ATE + EMot / without holder + eFSB
			→	+PR 2EF / 2ER;		**24.6242-7002.5**	**241336**	ATE + EMot / without holder + eFSB
			→	+PR 2ET;		**24.6242-7017.5**	**241185**	ATE without holder + eFSB
			→	+PR 2ET;		**24.6242-7018.5**	**241186**	ATE without holder + eFSB

Brake Pad Set, disc brake

	kW				! #			
1.8 TFSI 2.0 TDI 2.0 TDI quattro 2.0 TFSI 2.0 TFSI quattro 2.0 TTS quattro 40 TFSI 45 TFSI 45 TFSI quattro	132 135 135 169 162 - 169 210 - 225 145 180 180	07/15→08/18 11/14→ 01/17→ 11/14→ 11/14→ 02/15→ 07/18→ 07/18→ 07/18→	←	+PR 1LJ / 1LP / 1ZD / 1ZF / 1ZL / 1ZT / 1ZV / 1ZW		**13.0460-2785.2**	**602785**	TRW 25683 20,4 + WE / + WK
			←	+PR 1LJ / 1ZD / 1ZF / 1ZL / 1LP / 1ZT / 1ZV / 1ZW		**13.0470-2785.2**	**LD2785**	TRW 25683 20,4 + WE / + WK Ceramic
			→	+PR 1KE; + eFSB; +PR 2EC		**13.0460-7293.2** **13.0470-7293.2**	**607293** **LD7293**	ATE 25008 16,3 - WE / - WK ATE 25008 16,3 - WE / - WK Ceramic
			→	+ eFSB; +PR 1KV / 2ED / 2EF / 2EG / 2EK / 2EN / 2ER / 2ET / 2EP		**13.0460-7294.2** **13.0470-7294.2**	**607294** **LD7294**	ATE 25009 16,4 - WE / - WK ATE 25009 16,4 - WE / - WK Ceramic
2.0 TTS quattro 2.5 RS quattro TTS TTS quattro	228 294 235 235	11/14→ 10/16→ 01/21→ 11/20→	←	+PR 1LJ / 1LP / 1ZD / 1ZF / 1ZL / 1ZT / 1ZV / 1ZW		**13.0460-2785.2**	**602785**	TRW 25683 20,4 + WE / + WK
			→	+PR 1KE; + eFSB; +PR 2EC		**13.0460-7293.2**	**607293**	ATE 25008 16,3 - WE / - WK
			→	+ eFSB; +PR 1KV / 2ED / 2EF / 2EG / 2EK / 2EN / 2ER / 2ET / 2EP		**13.0460-7294.2**	**607294**	ATE 25009 16,4 - WE / - WK

Warning Contact, brake pad wear

	kW				! #			
1.8 TFSI 2.0 TDI 2.0 TDI quattro 2.0 TFSI 2.0 TFSI quattro 2.0 TTS quattro 40 TFSI 45 TFSI 45 TFSI quattro TTS TTS quattro	132 135 135 169 162 - 169 210 - 228 145 180 180 235 235	07/15→08/18 11/14→ 01/17→ 11/14→ 11/14→ 11/14→ 07/18→ 07/18→ 07/18→ 01/21→ 11/20→	←	+PR 1LJ / 1ZD	1	**24.8190-0065.2**	**620065**	

Brake Disc

	kW				! #			
1.8 TFSI 2.0 TDI 2.0 TDI quattro 2.0 TFSI 2.0 TFSI quattro 2.0 TTS quattro 2.5 RS quattro	132 135 135 169 162 - 169 210 - 228 294	07/15→08/18 11/14→ 01/17→ 11/14→ 11/14→ 11/14→ 10/16→	←	+PR 1LJ / 1ZD / 1ZF / 1ZL / 1LP / 1ZT / 1ZV / 1ZW		**24.0125-0158.1**	**425158**	Ø 312 Brake Disc Thickness [mm] 25 Minimum thickness [mm] 22 Vented + S
			←	+PR 1LK / 1LH / 1LW		**24.0130-0225.1**	**430225**	Ø 340 Brake Disc Thickness [mm] 30 Minimum thickness [mm] 27 Vented + S

	kW				! #			
AUDI - TT Roadster (FV9, FVR) 11/14→								
Brake Disc								
40 TFSI 45 TFSI 45 TFSI quattro TTS TTS quattro	145 180 180 235 235	07/18→ 07/18→ 07/18→ 01/21→ 11/20→	➡	+PR 1KZ / 1KE / 2EC		**24.0110-0356.1**	**410356**	Ø 272 Brake Disc Thickness [mm] 9.7 Minimum thickness [mm] 8 + S
			➡	+ eFSB; +PR 1KV / 2ED / 2EN / 2EP		**24.0112-0210.1**	**412210**	Ø 300 Brake Disc Thickness [mm] 12 Minimum thickness [mm] 10 + S
			➡	+PR 2EG / 2EK / 2ES / 2EF / 2ER / 2ET		**24.0122-0219.1**	**422219**	Ø 310 Brake Disc Thickness [mm] 22 Minimum thickness [mm] 20 Vented
Sensor, wheel speed								
1.8 TFSI 2.0 TDI 2.0 TFSI 40 TFSI 45 TFSI	132 135 169 145 180	07/15→08/18 11/14→ 11/14→ 07/18→ 07/18→	⬅			**24.0711-5273.3**	**360303**	
			⬅			**24.0711-5274.3**	**360304**	
			➡		2	**24.0711-6337.3**	**360390**	
2.0 TDI quattro 2.0 TFSI quattro 2.0 TTS quattro 2.5 RS quattro 45 TFSI quattro TTS TTS quattro	135 162 - 169 210 - 228 294 180 235 235	01/17→ 11/14→ 11/14→ 10/16→ 07/18→ 01/21→ 11/20→	⬅			**24.0711-5273.3**	**360303**	
			⬅			**24.0711-5274.3**	**360304**	
			➡			**24.0711-5401.3**	**360330**	
			➡			**24.0711-5402.3**	**360331**	
Control Element, parking brake caliper								
1.8 TFSI 2.0 TDI 2.0 TDI quattro 2.0 TFSI 2.0 TFSI quattro 2.0 TTS quattro 2.5 RS quattro 40 TFSI 45 TFSI 45 TFSI quattro TTS TTS quattro	132 135 135 169 162 - 169 210 - 228 294 145 180 180 235 235	07/15→08/18 11/14→ 01/17→ 11/14→ 11/14→ 11/14→ 10/16→ 07/18→ 07/18→ 07/18→ 01/21→ 11/20→	➡			**11.9282-1001.3**	**250159**	ATE
			➡			**11.9282-1002.3**	**250160**	ATE
AUTOBIANCHI - Y10 03/85→10/95								
Brake Shoe Set								
1.0	33 - 41	03/85→10/95	➡	12/87→ 12/89		**03.0137-0273.2**	**650273**	AP Ø 185 Width [mm] 31
			➡	06/85→ 12/89		**03.0137-0273.2**	**650273**	AP Ø 185 Width [mm] 31
1.0 4WD 1.0 Cat	37 33	12/86→10/95 10/87→10/95	➡	12/87→ 12/89		**03.0137-0273.2**	**650273**	AP Ø 185 Width [mm] 31
			➡	→ 12/89		**03.0137-0273.2**	**650273**	AP Ø 185 Width [mm] 31
1.0 Turbo	63	03/85→10/95	➡	06/85→ 12/89		**03.0137-0273.2**	**650273**	AP Ø 185 Width [mm] 31
1.1	42	06/89→10/95	➡	01/90→		**03.0137-0273.2**	**650273**	AP Ø 185 Width [mm] 31
1.1 i.e. Cat 1.3 i.e. GT	42 54 - 57	09/90→10/95 06/89→10/95	➡			**03.0137-0273.2**	**650273**	AP Ø 185 Width [mm] 31
BMW - 1 (E81) 09/06→09/12								
Guide Bolt, brake caliper								
118 d 120 i	100 - 105 120 - 125	09/06→12/11 03/07→09/12	⬅	04/07→ 05/11	2	**11.8171-0008.1**	**990049**	ATE
120 d	120	03/07→12/11	⬅		2	**11.8171-0008.1**	**990049**	ATE
120 d 130 i	130 - 145 190 - 195	03/07→12/11 09/06→12/11	⬅	→ 05/11	2	**11.8171-0008.1**	**990049**	ATE
120 i	115	03/07→12/11	⬅	→ 03/07; Number of Doors: 3	2	**11.8171-0008.1**	**990049**	ATE
123 d	150	03/07→12/11	⬅	10/07→ 02/10	2	**11.8171-0008.1**	**990049**	ATE
			⬅	10/07→ 05/11	2	**11.8171-0008.1**	**990049**	ATE
Accessory Kit, parking brake shoes								
123 d	150	03/07→12/11		10/07→ 05/11		**03.0137-9700.2**	**669700**	

© 2022 Continental Aftermarket & Services GmbH

	kW				! #			
BMW - 1 (E81) 09/06→09/12								
Accessory Kit, parking brake shoes								
130 i	190 - 195	09/06→12/11		→ 05/11		**03.0137-9700.2**	**669700**	
BMW - 1 (E87) 02/03→01/13								
Guide Bolt, brake caliper								
118 d	90	06/04→02/07	←	09/04→; Number of Doors: 3	2	**11.8171-0008.1**	**990049**	ATE
118 d 120 i	100 - 105 120 - 125	03/07→06/11 03/07→06/11	←	04/07→ 05/11	2	**11.8171-0008.1**	**990049**	ATE
120 d	110	06/04→02/07	←	09/04→; Number of Doors: 3	2	**11.8171-0008.1**	**990049**	ATE
			←	09/04→; Number of Doors: 5	2	**11.8171-0008.1**	**990049**	ATE
			←	09/04→	2	**11.8171-0008.1**	**990049**	ATE
120 d	120	06/04→06/11	←	09/04→ 02/07; Number of Doors: 3	2	**11.8171-0008.1**	**990049**	ATE
			←	09/04→ 02/07; Number of Doors: 5	2	**11.8171-0008.1**	**990049**	ATE
			←	09/04→ 02/07	2	**11.8171-0008.1**	**990049**	ATE
120 d 130 i	130 190	03/07→06/11 03/07→06/11	←	→ 05/11	2	**11.8171-0008.1**	**990049**	ATE
120 i	110	06/04→02/07	←	09/04→ 12/05; Number of Doors: 5	2	**11.8171-0008.1**	**990049**	ATE
			←	09/04→; Number of Doors: 3	2	**11.8171-0008.1**	**990049**	ATE
120 i	115	03/07→06/11	←	→ 03/07; Number of Doors: 3	2	**11.8171-0008.1**	**990049**	ATE
123 d	150	03/07→06/11	←	10/07→ 02/10	2	**11.8171-0008.1**	**990049**	ATE
			←	10/07→ 05/11	2	**11.8171-0008.1**	**990049**	ATE
130 i	195	09/05→02/07	←		2	**11.8171-0008.1**	**990049**	ATE
Accessory Kit, parking brake shoes								
123 d	150	03/07→06/11		10/07→ 05/11		**03.0137-9700.2**	**669700**	
130 i	190	03/07→06/11		→ 05/11		**03.0137-9700.2**	**669700**	
130 i	195	09/05→02/07				**03.0137-9700.2**	**669700**	
BMW - 1 Convertible (E88) 12/07→12/13								
Guide Bolt, brake caliper								
118 d 118 i 120 d 120 i 123 d	100 - 105 100 - 105 120 - 145 115 - 120 150	09/08→12/13 03/08→12/13 03/08→12/13 03/08→12/13 09/08→12/13		→ 10/13	2	**11.8171-0008.1**	**990049**	ATE
120 i 125 i 128 i	125 160 172	12/07→10/13 12/07→10/13 12/07→10/13			2	**11.8171-0008.1**	**990049**	ATE
Accessory Kit, parking brake shoes								
123 d 135 i	150 240	09/08→12/13 03/08→12/13		→ 10/13		**03.0137-9700.2**	**669700**	
135 i	225	03/08→10/13				**03.0137-9700.2**	**669700**	
BMW - 1 Coupe (E82) 10/06→10/13								
Guide Bolt, brake caliper								
118 d 120 d 120 i 123 d 125 i	100 - 105 120 - 130 115 150 160	09/09→10/13 09/07→10/13 09/09→10/13 10/07→10/13 03/08→10/13			2	**11.8171-0008.1**	**990049**	ATE
120 d	145	09/07→10/13		10/07→	2	**11.8171-0008.1**	**990049**	ATE
120 i	125	10/07→10/13		09/09→	2	**11.8171-0008.1**	**990049**	ATE
M	250	03/11→06/12		05/11→	2	**11.8171-0008.1**	**990049**	ATE
Accessory Kit, parking brake shoes								
123 d 135 i	150 225 - 240	10/07→10/13 10/07→10/13				**03.0137-9700.2**	**669700**	
M	250	03/11→06/12		05/11→		**03.0137-9700.2**	**669700**	

	kW				! #			
BMW - 2 Active Tourer (F45) 11/13→								
Brake Caliper								
216 d 218 d 218 d xDrive 218 i	85 100 - 110 100 - 110 100 - 103	03/14→ 11/13→ 12/14→ 07/14→	←			**24.3541-1862.5**	**241278**	TRW without holder
BMW - 2 Active Tourer Van (F45) 11/13→								
Brake Caliper								
218 d 218 i 220 d	110 103 140	07/14→ 03/18→ 11/14→	←			**24.3541-1862.5**	**241278**	TRW without holder
BMW - 2 Coupe (F22, F87) 10/12→								
Accessory Kit, parking brake shoes								
M2 M2 Competition M2 CS	272 302 331	11/15→06/18 06/18→ 11/19→				**03.0137-9700.2**	**669700**	
BMW - 2 Coupe (G42) 08/21→								
Brake Pad Set, disc brake								
220 d Mild-Hybrid 220 i	140 135	08/21→ 08/21→	←	for vehicles with M-sport brakes		**13.0460-4897.2**	**604897**	BRE + WE / - WK
			→	for vehicles with M-sport brakes		**13.0460-5523.2** **13.0470-5523.2**	**605523** **LD5523**	+ WE / - WK + Zub + WE / - WK + Zub Ceramic
M240 i xDrive	275	08/21→	←	for vehicles with technology package		**13.0460-4896.2**	**604896**	BRE + WE / - WK
			←	for vehicles without technology package		**13.0460-4897.2**	**604897**	BRE + WE / - WK
			→			**13.0460-5523.2**	**605523**	+ WE / - WK + Zub
Warning Contact, brake pad wear								
220 d Mild-Hybrid 220 i	140 135	08/21→ 08/21→	←		1	**24.8190-0808.2**	**620808**	
			→		1	**24.8190-0810.2**	**620810**	
M240 i xDrive	275	08/21→	←		1	**24.8190-0808.2**	**620808**	
			→		1	**24.8190-0810.2**	**620810**	
BMW - 2 Gran Tourer (F46) 07/14→								
Brake Caliper								
214 d 216 d 216 i	70 85 75 - 80	07/15→02/18 08/14→ 09/14→	←			**24.3541-1862.5**	**241278**	TRW without holder
BMW - 3 (E30) 09/82→03/92								
Guide Bolt, brake caliper								
316	66	09/83→06/88	←	07/87→; for government vehicles	2	**11.8171-0008.1**	**990049**	ATE
			→	+ ABS	2	**11.8171-0008.1**	**990049**	ATE
316 i	73 - 75	08/87→06/91	→	+ ABS; for government vehicles	2	**11.8171-0008.1**	**990049**	ATE
318 i	75 - 85	09/82→12/91	←	for government vehicles	2	**11.8171-0008.1**	**990049**	ATE
			→	+ ABS; for government vehicles	2	**11.8171-0008.1**	**990049**	ATE
318 is 320 is 324 td 325 e 2.7 325 i M3 2.3 M3 EVO I 2.3	100 141 85 95 125 - 126 143 - 147 162	09/89→08/91 05/88→12/90 09/87→08/91 01/85→08/87 09/83→06/91 07/86→06/91 10/88→10/90	←		2	**11.8171-0008.1**	**990049**	ATE
			→		2	**11.8171-0008.1**	**990049**	ATE
320 i	92 - 95	09/82→12/91	←		2	**11.8171-0008.1**	**990049**	ATE
			→	+ ABS	2	**11.8171-0008.1**	**990049**	ATE
			→	09/87→; for government vehicles	2	**11.8171-0008.1**	**990049**	ATE
323 i 325 i X	110 125 - 126	09/83→09/86 03/86→08/91	→		2	**11.8171-0008.1**	**990049**	ATE
324 d	63	09/85→12/90	←		2	**11.8171-0008.1**	**990049**	ATE
			→	+ ABS; for government vehicles	2	**11.8171-0008.1**	**990049**	ATE

© 2022 Continental Aftermarket & Services GmbH

	kW				! #			
BMW - 3 (E30) 09/82→03/92								
Guide Bolt, brake caliper								
325 e 2.7	90	10/83→12/88	←	→ 09/87	2	**11.8171-0008.1**	**990049**	ATE
			→	→ 09/87	2	**11.8171-0008.1**	**990049**	ATE
M3 2.3	158	01/86→12/90	←	07/86→	2	**11.8171-0008.1**	**990049**	ATE
			→	07/86→	2	**11.8171-0008.1**	**990049**	ATE
M3 EVO II 2.5	175	01/90→01/92	←	→ 12/91	2	**11.8171-0008.1**	**990049**	ATE
			→	→ 12/91	2	**11.8171-0008.1**	**990049**	ATE
BMW - 3 (E36) 09/90→11/98								
Guide Bolt, brake caliper								
316 i	73 - 75	03/91→05/98		+ ABS	2	**11.8171-0008.1**	**990049**	ATE
			←		2	**11.8171-0008.1**	**990049**	ATE
318 i	83 - 85	09/90→11/98		+ ABS	2	**11.8171-0008.1**	**990049**	ATE
				for increased payload	2	**11.8171-0008.1**	**990049**	ATE
318 tds	66	01/95→02/98	←	not for increased payload	2	**11.8171-0008.1**	**990049**	ATE
318 is 323 i 325 i 325 tds 328 i M3 3.0 M3 3.2	103 125 141 105 142 210 236	09/93→05/98 05/95→11/98 09/90→12/95 05/93→02/98 01/95→04/98 10/94→07/95 10/95→01/98			2	**11.8171-0008.1**	**990049**	ATE
320 i 325 td	110 85	01/91→02/98 09/91→02/98	←		2	**11.8171-0008.1**	**990049**	ATE
			→		2	**11.8171-0008.1**	**990049**	ATE
BMW - 3 (E46) 12/97→05/05								
Guide Bolt, brake caliper								
316 i	77	04/00→02/05			2	**11.8171-0008.1**	**990049**	ATE
			→		2	**11.8171-0008.1**	**990049**	ATE
316 i	77 - 85	12/98→02/05			2	**11.8171-0008.1**	**990049**	ATE
				for increased payload	2	**11.8171-0008.1**	**990049**	ATE
318 i	87	12/97→09/01	→	not for increased payload	2	**11.8171-0008.1**	**990049**	ATE
318 d 318 i 320 d 320 i 323 i 325 i 325 xi 328 i 330 d 330 i 330 xi	85 100 - 105 95 - 110 110 - 125 120 - 125 141 141 142 135 - 150 170 170	09/01→02/05 09/01→02/05 02/98→05/05 03/98→02/05 03/98→09/00 09/00→02/05 09/00→02/05 02/98→06/00 10/99→02/05 06/00→02/05 06/00→02/05			2	**11.8171-0008.1**	**990049**	ATE
330 i	168	01/01→04/05		→ 02/05	2	**11.8171-0008.1**	**990049**	ATE
330 xd	135	01/00→02/03		06/00→	2	**11.8171-0008.1**	**990049**	ATE
330 xd	150	09/02→12/04		03/03→	2	**11.8171-0008.1**	**990049**	ATE
Accessory Kit, parking brake shoes								
325 xi 330 d 330 i 330 xi	141 135 - 150 170 170	09/00→02/05 10/99→02/05 06/00→02/05 06/00→02/05				**03.0137-9700.2**	**669700**	
330 i	168	01/01→04/05		→ 02/05		**03.0137-9700.2**	**669700**	
330 xd	135	01/00→02/03		06/00→		**03.0137-9700.2**	**669700**	
330 xd	150	09/02→12/04		03/03→		**03.0137-9700.2**	**669700**	
BMW - 3 (E90) 02/04→02/12								
Guide Bolt, brake caliper								
316 d 316 i 318 d 318 i 320 d	85 90 100 100 - 105 120	07/09→12/11 09/07→10/11 09/07→10/11 09/07→10/11 12/04→10/11			2	**11.8171-0008.1**	**990049**	ATE

	kW				! #			
BMW - 3 (E90) 02/04→02/12								
Guide Bolt, brake caliper								
316 i	85	09/05→10/11		→ 08/07	2	**11.8171-0008.1**	**990049**	ATE
318 d	90	03/05→08/07		09/05→	2	**11.8171-0008.1**	**990049**	ATE
318 d 320 i	105 120	02/07→10/11 03/07→12/11		09/07→	2	**11.8171-0008.1**	**990049**	ATE
318 i 320 i	95 110	09/05→08/07 12/04→08/07		03/07→; Engine Code: N46N	2	**11.8171-0008.1**	**990049**	ATE
				Engine Code: N46	2	**11.8171-0008.1**	**990049**	ATE
320 d 320 d xDrive	110 120 - 135	12/04→09/07 09/08→10/11	←		2	**11.8171-0008.1**	**990049**	ATE
			→	for government vehicles	2	**11.8171-0008.1**	**990049**	ATE
320 d 320 i	115 125	12/04→09/07 09/07→10/11	←		2	**11.8171-0008.1**	**990049**	ATE
320 d	130 - 135	09/07→10/11			2	**11.8171-0008.1**	**990049**	ATE
			→	for government vehicles	2	**11.8171-0008.1**	**990049**	ATE
320 i	115	02/07→12/11		03/07→ 08/07; Engine Code: N46N	2	**11.8171-0008.1**	**990049**	ATE
				→ 08/07; Engine Code: N46	2	**11.8171-0008.1**	**990049**	ATE
320 si	127	09/05→08/06		06/06→	2	**11.8171-0008.1**	**990049**	ATE
323 i	130 - 140	09/05→12/11	←		2	**11.8171-0008.1**	**990049**	ATE
325 i 328 i	155 172	01/06→12/11 09/06→12/11	→	for increased payload	2	**11.8171-0008.1**	**990049**	ATE
325 d	145 - 150	09/06→10/11	←		2	**11.8171-0008.1**	**990049**	ATE
325 xi 330 d 330 d xDrive 330 i xDrive 330 xd 330 xi 335 i xDrive	160 155 - 180 180 200 170 190 - 200 225	09/05→08/06 09/05→12/11 09/08→10/11 09/08→10/11 09/05→08/08 09/05→08/08 09/08→10/11	→		2	**11.8171-0008.1**	**990049**	ATE
325 i	160	12/04→12/11			2	**11.8171-0008.1**	**990049**	ATE
			→	for increased payload	2	**11.8171-0008.1**	**990049**	ATE
325 i xDrive	155 - 160	09/08→10/11	←	not for increased payload	2	**11.8171-0008.1**	**990049**	ATE
			→	for increased payload	2	**11.8171-0008.1**	**990049**	ATE
325 xi	160	09/05→08/08		→ 08/07; not for increased payload; Engine Code: N52	2	**11.8171-0008.1**	**990049**	ATE
				not for increased payload; Engine Code: N52N	2	**11.8171-0008.1**	**990049**	ATE
			→	for increased payload	2	**11.8171-0008.1**	**990049**	ATE
325 xi	160	09/07→08/08		not for increased payload; Engine Code: N52N	2	**11.8171-0008.1**	**990049**	ATE
					2	**11.8171-0008.1**	**990049**	ATE
				not for increased payload; Engine Code: N52	2	**11.8171-0008.1**	**990049**	ATE
				Engine Code: N53; not for increased payload	2	**11.8171-0008.1**	**990049**	ATE
			→	for increased payload	2	**11.8171-0008.1**	**990049**	ATE
330 d 335 d 335 i 335 i xDrive 335 xi M3 M3 CRT	170 210 225 224 - 240 225 309 331	09/05→09/08 09/06→12/11 09/06→12/11 05/08→10/11 03/07→08/08 12/07→10/11 03/11→12/11			2	**11.8171-0008.1**	**990049**	ATE
			→		2	**11.8171-0008.1**	**990049**	ATE
330 i	190	12/04→10/11		not for increased payload	2	**11.8171-0008.1**	**990049**	ATE
			→		2	**11.8171-0008.1**	**990049**	ATE
330 i	200	03/07→12/11	←	for increased payload	2	**11.8171-0008.1**	**990049**	ATE
			→		2	**11.8171-0008.1**	**990049**	ATE
335 i	220 - 240	03/06→12/11		09/06→	2	**11.8171-0008.1**	**990049**	ATE
			→	09/06→	2	**11.8171-0008.1**	**990049**	ATE
335 i	224	03/06→12/11	←	09/06→	2	**11.8171-0008.1**	**990049**	ATE
			→	09/06→	2	**11.8171-0008.1**	**990049**	ATE
335 xi	224 - 240	09/06→06/08		03/07→	2	**11.8171-0008.1**	**990049**	ATE
			→	03/07→	2	**11.8171-0008.1**	**990049**	ATE
Accessory Kit, parking brake shoes								
320 d	110 - 115	12/04→09/07		09/05→; for government vehicles		**03.0137-9700.2**	**669700**	

© 2022 Continental Aftermarket & Services GmbH

	kW				! #			
BMW - 3 (E90) 02/04→02/12								
Accessory Kit, parking brake shoes								
320 d	130 - 135	09/07→10/11		for government vehicles		**03.0137-9700.2**	**669700**	
320 d xDrive	120 - 135	09/08→10/11				**03.0137-9700.2**	**669700**	
325 d	145 - 150	09/06→10/11						
325 i xDrive	155 - 160	09/08→10/11						
325 xi	160	09/05→08/08						
330 d	155 - 180	09/05→12/11						
330 d xDrive	180	09/08→10/11						
330 i	190 - 200	12/04→12/11						
330 i xDrive	200	09/08→10/11						
330 xd	170	09/05→08/08						
330 xi	190 - 200	09/05→08/08						
335 d	210	09/06→12/11						
335 i	225	09/06→12/11						
335 i xDrive	224 - 240	05/08→10/11						
335 xi	225	03/07→08/08						
M3	309	12/07→10/11						
M3 CRT	331	03/11→12/11						
320 si	127	09/05→08/06	➡	06/06→		**03.0137-9700.2**	**669700**	
323 i	130 - 140	09/05→12/11		for increased payload		**03.0137-9700.2**	**669700**	
325 i	155 - 160	12/04→12/11						
328 i	172	09/06→12/11						
335 i	220 - 240	03/06→12/11		09/06→		**03.0137-9700.2**	**669700**	
335 xi	224 - 240	09/06→06/08		03/07→		**03.0137-9700.2**	**669700**	
BMW - 3 (F30, F80) 11/11→10/18								
Accessory Kit, parking brake shoes								
318 d xDrive	105 - 110	07/13→02/18				**03.0137-9700.2**	**669700**	
320 d xDrive	120 - 147	08/12→10/18						
320 i xDrive	135	07/12→10/18						
328 i xDrive	180	07/12→08/16						
330 d	190	07/12→10/18						
330 d xDrive	190	03/13→10/18						
330 i	185	07/15→10/18						
330 i xDrive	185	07/15→10/18						
335 d xDrive	230	07/13→10/18						
335 i	250	07/13→07/15						
335 i xDrive	225 - 250	07/12→07/15						
340 i	240 - 265	07/15→10/18						
340 i xDrive	240 - 265	07/15→10/18						
ActiveHybrid	225 - 250	07/12→06/15						
M3	317	03/14→10/18						
M3 Competition	331	03/16→10/18						
M3 CS	338	01/18→10/18						
328i	160	11/11→06/15		02/12→; Engine Code: N20		**03.0137-9700.2**	**669700**	
328 i	180	11/11→10/18						
330 d	210	07/12→10/18		09/15→		**03.0137-9700.2**	**669700**	
330 d xDrive	210	03/13→10/18						
330 e	135 - 185	11/15→10/18		01/16→		**03.0137-9700.2**	**669700**	
335 i	225 - 240	11/11→07/15		02/12→		**03.0137-9700.2**	**669700**	
BMW - 3 (G20, G80, G28) 11/18→								
Brake Pad Set, disc brake								
316 d	85 - 90	03/20→	⬅	for vehicles with M-sport brakes		**13.0460-4897.2**	**604897**	BRE + WE / - WK
316 d Mild-Hybrid	85 - 90	08/20→	➡	for vehicles with M-sport brakes		**13.0460-5523.2** **13.0470-5523.2**	**605523** **LD5523**	+ WE / - WK + Zub + WE / - WK + Zub Ceramic
318 d	100 - 110	03/19→03/20						
318 d Mild-Hybrid	100 - 110	04/20→						
318 i	115	03/20→						

	kW				! #			
BMW - 3 (G20, G80, G28) 11/18→								
Brake Pad Set, disc brake								
320 d	120 - 140	11/18→	←	for vehicles with M-sport brakes		**13.0460-4897.2**	**604897**	BRE + WE / - WK
320 d Mild-Hybrid	120 - 140	03/20→	→	for vehicles with M-sport brakes		**13.0460-5523.2**	**605523**	+ WE / - WK + Zub
320 d Mild-Hybrid xDrive	120 - 140	03/20→				**13.0470-5523.2**	**LD5523**	+ WE / - WK + Zub Ceramic
320 d xDrive	120 - 140	11/18→02/20						
320 e Plug-in-Hybrid	120 - 150	07/20→						
320 i	135	03/19→						
320 i 1.6	125	03/19→						
320 i xDrive	135	07/19→	←	for vehicles with M-sport brakes		**13.0460-4897.2**	**604897**	BRE + WE / - WK
330 d	195	03/19→						
330 d Mild-Hybrid	210	11/20→	←	for vehicles without M-sport brakes		**13.0460-7345.2**	**607345**	ATE + WE / - WK
330 d Mild-Hybrid xDrive	210	11/20→	→	for vehicles with M-sport brakes		**13.0460-5523.2**	**605523**	+ WE / - WK + Zub
330 d xDrive	195	07/19→				**13.0470-5523.2**	**LD5523**	+ WE / - WK + Zub Ceramic
330 e Plug-in-Hybrid	135 - 215	07/19→						
330 e Plug-in-Hybrid xDrive	135 - 215	07/20→						
330 i	190	11/18→						
330 i xDrive	190	11/18→						
M340 d Mild-Hybrid xDrive	250	04/20→	←	for vehicles with M-technology		**13.0460-4896.2**	**604896**	BRE + WE / - WK
M 340 i	285	03/19→	←	for vehicles without M-technology		**13.0460-4897.2**	**604897**	BRE + WE / - WK
M 340 i Mild-Hybrid xDrive	275	11/20→	→			**13.0460-5523.2**	**605523**	+ WE / - WK + Zub
M 340 i xDrive	275 - 285	03/19→						
Warning Contact, brake pad wear								
316 d	85 - 90	03/20→	←		1	**24.8190-0808.2**	**620808**	
316 d Mild-Hybrid	85 - 90	08/20→	→		1	**24.8190-0810.2**	**620810**	
318 d	100 - 110	03/19→03/20						
318 d Mild-Hybrid	100 - 110	04/20→						
318 i	115	03/20→						
320 d	120 - 140	11/18→						
320 d Mild-Hybrid	120 - 140	03/20→						
320 d Mild-Hybrid xDrive	120 - 140	03/20→						
320 d xDrive	120 - 140	11/18→02/20						
320 e Plug-in-Hybrid	120 - 150	07/20→						
320 i	135	03/19→						
320 i 1.6	125	03/19→						
320 i xDrive	135	07/19→						
330 d	195	03/19→						
330 d Mild-Hybrid	210	11/20→						
330 d Mild-Hybrid xDrive	210	11/20→						
330 d xDrive	195	07/19→						
330 e Plug-in-Hybrid	135 - 215	07/19→						
330 e Plug-in-Hybrid xDrive	135 - 215	07/20→						
330 i	190	11/18→						
330 i xDrive	190	11/18→						
M340 d Mild-Hybrid xDrive	250	04/20→						
M 340 i	285	03/19→						
M 340 i Mild-Hybrid xDrive	275	11/20→						
M 340 i xDrive	275 - 285	03/19→						
Accessory Kit, parking brake shoes								
M3	353	11/20→				**03.0137-9700.2**	**669700**	
M3 Competition	375	11/20→						
M3 Competition xDrive	375	05/21→						
BMW - 3 Compact (E36) 01/94→08/00								
Guide Bolt, brake caliper								
316 g	75	02/96→08/00			2	**11.8171-0008.1**	**990049**	ATE
316 i	75 - 77	01/94→08/00						
318 tds	66	06/95→08/00						

© 2022 Continental Aftermarket & Services GmbH

	kW				! #			
BMW - 3 Compact (E36) 01/94→08/00								
Guide Bolt, brake caliper								
323 ti	120 - 125	09/97→08/00			2	**11.8171-0008.1**	**990049**	ATE
318 ti	103	09/94→12/95			2	**11.8171-0008.1**	**990049**	ATE
				Engine Code: M42	2	**11.8171-0008.1**	**990049**	ATE
318 ti	103	01/96→08/99		→ 04/98; Engine Code: M44	2	**11.8171-0008.1**	**990049**	ATE
				05/98→; Engine Code: M44	2	**11.8171-0008.1**	**990049**	ATE
					2	**11.8171-0008.1**	**990049**	ATE
BMW - 3 Compact (E46) 03/01→02/05								
Guide Bolt, brake caliper								
316 ti 318 td 320 td 325 ti	77 - 85 85 100 - 110 141	06/01→02/05 03/03→02/05 09/01→02/05 04/01→12/04			2	**11.8171-0008.1**	**990049**	ATE
318 ti	100 - 105	03/01→12/04		09/01→	2	**11.8171-0008.1**	**990049**	ATE
BMW - 3 Convertible (E30) 09/82→11/93								
Guide Bolt, brake caliper								
316 i Baur TC	73	09/87→12/89	➡	+ ABS; for government vehicles	2	**11.8171-0008.1**	**990049**	ATE
318 i	83	09/90→10/93	➡	→ 05/93	2	**11.8171-0008.1**	**990049**	ATE
320 i 325 i	95 125	05/86→11/93 08/87→11/93	⬅	→ 12/92	2	**11.8171-0008.1**	**990049**	ATE
			➡	→ 12/92	2	**11.8171-0008.1**	**990049**	ATE
325 i M3 2.3	126 143	12/85→12/87 06/88→06/91	⬅		2	**11.8171-0008.1**	**990049**	ATE
			➡		2	**11.8171-0008.1**	**990049**	ATE
BMW - 3 Convertible (E36) 03/93→11/99								
Guide Bolt, brake caliper								
318 i 323 i 325 i 328 i M3 3.0 M3 3.2	85 125 141 142 210 236	03/94→11/99 05/95→11/99 03/93→08/95 01/95→11/99 04/94→07/95 03/96→09/99			2	**11.8171-0008.1**	**990049**	ATE
320 i	110	12/93→11/99			2	**11.8171-0008.1**	**990049**	ATE
				Engine Code: M50	2	**11.8171-0008.1**	**990049**	ATE
				Engine Code: M52	2	**11.8171-0008.1**	**990049**	ATE
BMW - 3 Convertible (E46) 04/00→12/07								
Guide Bolt, brake caliper								
318 Ci	100	12/00→08/06		09/01→	2	**11.8171-0008.1**	**990049**	ATE
			➡	09/01→	2	**11.8171-0008.1**	**990049**	ATE
318 Ci 330 Cd	105 150	09/01→12/07 08/05→12/07		→ 09/06	2	**11.8171-0008.1**	**990049**	ATE
			➡	→ 09/06	2	**11.8171-0008.1**	**990049**	ATE
318 Ci 330 Ci M3	110 170 252	03/04→08/06 06/00→08/06 03/01→08/06			2	**11.8171-0008.1**	**990049**	ATE
			➡		2	**11.8171-0008.1**	**990049**	ATE
320 Cd 320 Ci	110 120 - 125	02/05→12/07 09/00→12/07		→ 09/06	2	**11.8171-0008.1**	**990049**	ATE
323 Ci 325 Ci	120 - 125 141	04/00→09/00 09/00→08/06			2	**11.8171-0008.1**	**990049**	ATE
Accessory Kit, parking brake shoes								
330 Cd	150	08/05→12/07		→ 09/06		**03.0137-9700.2**	**669700**	
330 Ci	170	06/00→08/06				**03.0137-9700.2**	**669700**	
BMW - 3 Convertible (E93) 05/06→12/13								
Guide Bolt, brake caliper								
318 i 320 d 323 i 325 d 330 d	105 120 - 147 140 145 - 155 180	03/10→12/13 09/07→12/13 03/07→09/11 03/07→09/13 01/09→12/13	⬅		2	**11.8171-0008.1**	**990049**	ATE
			➡		2	**11.8171-0008.1**	**990049**	ATE

	kW				! #			
BMW - 3 Convertible (E93) 05/06→12/13								
Guide Bolt, brake caliper								
335 i	225 - 240	05/06→10/13	←		2	**11.8171-0008.1**	**990049**	ATE
M3	309	03/08→10/13	→		2	**11.8171-0008.1**	**990049**	ATE
320 i	115 - 125	09/06→10/13	←	03/08→	2	**11.8171-0008.1**	**990049**	ATE
			←	→ 02/08	2	**11.8171-0008.1**	**990049**	ATE
			→		2	**11.8171-0008.1**	**990049**	ATE
325 i	155 - 160	10/06→12/13	←	Engine Code: N53/N52N	2	**11.8171-0008.1**	**990049**	ATE
330 i	200	03/07→02/10	→		2	**11.8171-0008.1**	**990049**	ATE
325 i	160	03/07→12/13	←	Engine Code: N52N/N53	2	**11.8171-0008.1**	**990049**	ATE
			→		2	**11.8171-0008.1**	**990049**	ATE
330 d	170	03/07→12/13	←	09/09→	2	**11.8171-0008.1**	**990049**	ATE
330 i	200	03/07→10/13	←	→ 08/09	2	**11.8171-0008.1**	**990049**	ATE
			→		2	**11.8171-0008.1**	**990049**	ATE
330 i	190	03/10→10/13	←	Engine Code: N52N	2	**11.8171-0008.1**	**990049**	ATE
			←	Engine Code: N53	2	**11.8171-0008.1**	**990049**	ATE
			→		2	**11.8171-0008.1**	**990049**	ATE
Accessory Kit, parking brake shoes								
320 d	120	01/08→12/13		→ 11/13		**03.0137-9700.2**	**669700**	
325 i	160	03/07→12/13						
330 d	170 - 180	03/07→12/13						
320 d	130 - 147	03/08→10/13				**03.0137-9700.2**	**669700**	
323 i	140	03/07→09/11						
325 i	160	12/06→02/10						
330 i	190 - 200	03/07→10/13						
M3	309	03/08→10/13						
320 d	145	09/07→02/10		03/08→		**03.0137-9700.2**	**669700**	
320 i	115 - 120	09/06→10/13		03/07→ 08/09		**03.0137-9700.2**	**669700**	
320 i	125	03/07→10/13		→ 08/09		**03.0137-9700.2**	**669700**	
325 d	145 - 155	03/07→12/10		09/07→		**03.0137-9700.2**	**669700**	
325 d	150	09/09→09/13		03/10→		**03.0137-9700.2**	**669700**	
325 i	155	10/06→12/13		03/07→ 11/13		**03.0137-9700.2**	**669700**	
335 i	225 - 240	05/06→10/13		03/07→		**03.0137-9700.2**	**669700**	
BMW - 3 Coupe (E36) 10/91→05/99								
Guide Bolt, brake caliper								
316 i	75	09/93→11/98			2	**11.8171-0008.1**	**990049**	ATE
318 is	103	01/92→04/99						
323 i	125	05/95→04/99						
325 i	141	10/91→02/95						
328 i	142	01/95→04/99						
M3 3.0	210 - 217	11/92→07/95						
M3 3.2	236	10/95→11/98						
320 i	110	12/91→11/98			2	**11.8171-0008.1**	**990049**	ATE
				Engine Code: M50	2	**11.8171-0008.1**	**990049**	ATE
				Engine Code: M52	2	**11.8171-0008.1**	**990049**	ATE
BMW - 3 Coupe (E46) 12/98→07/06								
Guide Bolt, brake caliper								
316 Ci	77 - 85	04/00→07/06			2	**11.8171-0008.1**	**990049**	ATE
318 Ci	85 - 110	12/99→05/06						
320 Cd	110	11/03→07/06						
323 Ci	120 - 125	04/99→09/00						
325 Ci	141	09/00→05/06						
328 Ci	142	12/98→05/00						
318 Ci	100	12/00→05/06		09/01→	2	**11.8171-0008.1**	**990049**	ATE
320 Ci	110	02/99→08/01		08/99→ 09/00	2	**11.8171-0008.1**	**990049**	ATE
320 Ci	120 - 125	01/00→05/06		09/00→	2	**11.8171-0008.1**	**990049**	ATE
330 Cd	150	03/03→07/06	→		2	**11.8171-0008.1**	**990049**	ATE

© 2022 Continental Aftermarket & Services GmbH

	kW				! #			
BMW - 3 Coupe (E46) 12/98→07/06								
Guide Bolt, brake caliper								
330 Ci 330 xi M3 M3 CSL	170 170 252 265	06/00→05/06 06/00→07/06 07/00→05/06 05/03→12/03	➡		2	**11.8171-0008.1**	**990049**	ATE
Accessory Kit, parking brake shoes								
330 Cd 330 Ci 330 xi	150 170 170	03/03→07/06 06/00→05/06 06/00→07/06				**03.0137-9700.2**	**669700**	
BMW - 3 Coupe (E92) 01/05→12/13								
Guide Bolt, brake caliper								
316 i 335 i	90 224	09/07→06/13 03/07→06/13	⬅		2	**11.8171-0008.1**	**990049**	ATE
318 i 320 d	105 120 - 147	03/10→12/13 09/06→06/13	⬅		2	**11.8171-0008.1**	**990049**	ATE
			➡		2	**11.8171-0008.1**	**990049**	ATE
320 d xDrive	120 - 147	09/08→06/13						
320 i	115 - 125	01/07→12/13						
323 i	140	04/06→02/12						
325 d	150 - 155	02/07→12/13						
325 i	150 - 160	06/06→10/13						
325 i xDrive	155 - 160	09/08→12/13						
325 xi	155 - 160	09/06→02/10						
330 d	170 - 180	03/06→12/13						
330 i xDrive	200	03/10→06/13						
330 xd	170	03/06→08/08						
330 xi	190 - 200	09/06→02/10						
335 i	225 - 240	06/06→06/13						
335 i xDrive	224 - 240	11/08→12/13						
335 xi	225 - 240	03/07→02/10						
M3	309	06/07→06/13						
320 d 325 d	130 145	09/06→02/10 02/07→02/10		03/07→	2	**11.8171-0008.1**	**990049**	ATE
			➡	03/07→	2	**11.8171-0008.1**	**990049**	ATE
325 i 325 i xDrive 330 i	155 150 190 - 200	03/10→06/13 03/10→04/13 09/06→06/13	⬅	Engine Code: N52N	2	**11.8171-0008.1**	**990049**	ATE
			⬅	Engine Code: N53	2	**11.8171-0008.1**	**990049**	ATE
			➡		2	**11.8171-0008.1**	**990049**	ATE
328 i 328 i xDrive 328 xi	172 172 172	06/06→06/13 09/08→06/13 09/06→08/08			2	**11.8171-0008.1**	**990049**	ATE
			➡		2	**11.8171-0008.1**	**990049**	ATE
330 d xDrive	180	02/10→06/13	➡		2	**11.8171-0008.1**	**990049**	ATE
330 i	200	09/07→06/13		Engine Code: N52N	2	**11.8171-0008.1**	**990049**	ATE
			⬅	Engine Code: N53	2	**11.8171-0008.1**	**990049**	ATE
			➡		2	**11.8171-0008.1**	**990049**	ATE
330 xd	180	03/08→02/10	⬅	09/09→	2	**11.8171-0008.1**	**990049**	ATE
			⬅	→ 08/09	2	**11.8171-0008.1**	**990049**	ATE
			➡		2	**11.8171-0008.1**	**990049**	ATE
335 d	210	03/06→03/13	➡	09/06→	2	**11.8171-0008.1**	**990049**	ATE
M3 GTS	331	03/07→12/13		→ 06/13	2	**11.8171-0008.1**	**990049**	ATE
			➡	→ 06/13	2	**11.8171-0008.1**	**990049**	ATE
Accessory Kit, parking brake shoes								
320 d xDrive	120 - 147	09/08→06/13				**03.0137-9700.2**	**669700**	
325 i xDrive	150 - 155	09/08→06/13						
325 xi	155 - 160	09/06→02/10						
328 i xDrive	172	09/08→06/13						
330 d xDrive	180	02/10→06/13						
330 i	190 - 200	09/06→06/13						
330 i xDrive	200	03/10→06/13						
330 xd	180	03/08→02/10						

© 2022 Continental Aftermarket & Services GmbH

	kW				! #			
BMW - 3 Coupe (E92) 01/05→12/13								
Accessory Kit, parking brake shoes								
330 xi	190 - 200	09/06→02/10				**03.0137-9700.2**	**669700**	
335 i	224	03/07→06/13						
335 i xDrive	224 - 240	11/08→12/13						
M3	309	06/07→06/13						
325 d	145 - 155	02/07→02/10		03/07→		**03.0137-9700.2**	**669700**	
325 d	150	09/09→12/13		→ 06/13		**03.0137-9700.2**	**669700**	
325 i xDrive	160	09/08→12/13						
330 d	180	01/09→12/13						
M3 GTS	331	03/07→12/13						
330 d	170	03/06→08/08		09/06→		**03.0137-9700.2**	**669700**	
330 xd	170	03/06→08/08						
335 d	210	03/06→03/13						
335 i	225 - 240	06/06→06/13						
335 xi	225 - 240	03/07→02/10		09/07→		**03.0137-9700.2**	**669700**	
BMW - 3 Gran Turismo (F34) 07/12→								
Accessory Kit, parking brake shoes								
318 d	100 - 110	03/13→				**03.0137-9700.2**	**669700**	
320 d	120 - 147	03/13→						
320 d xDrive	120 - 147	07/13→						
320 i	120 - 135	03/13→						
320 i xDrive	120 - 135	07/13→						
328 i	180	03/13→06/16						
328 i xDrive	180	07/13→06/16						
330 d	190	03/14→						
330 d xDrive	190	03/14→						
330 i	185	07/16→						
330 i xDrive	183 - 185	07/16→						
335 d xDrive	230	03/14→						
335 i	225 - 250	03/13→06/16						
335 i xDrive	225 - 250	03/13→06/16						
340 i	240 - 265	07/16→						
340 i xDrive	240 - 265	07/16→						
320 i xDrive	135	11/12→06/16		03/13→		**03.0137-9700.2**	**669700**	
325 d	155 - 165	07/13→02/18	➡			**03.0137-9700.2**	**669700**	
330 d	210	03/14→		09/15→		**03.0137-9700.2**	**669700**	
330 d xDrive	210	03/14→						
BMW - 3 Touring (E30) 07/87→10/94								
Guide Bolt, brake caliper								
316 i	73 - 75	09/91→06/94	➡		2	**11.8171-0008.1**	**990049**	ATE
318 i	83 - 85	09/87→06/94						
320 i	95	01/88→12/91	⬅		2	**11.8171-0008.1**	**990049**	ATE
324 td	85	01/88→06/93						
325 i	125	07/87→03/93	➡		2	**11.8171-0008.1**	**990049**	ATE
325 i X	125	06/88→10/93	➡	→ 09/93	2	**11.8171-0008.1**	**990049**	ATE
BMW - 3 Touring (E36) 08/94→12/99								
Guide Bolt, brake caliper								
316 i	75	03/97→05/99			2	**11.8171-0008.1**	**990049**	ATE
318 i	85	09/95→04/99						
318 tds	66	03/95→04/99						
320 i	110	01/95→04/99						
323 i	125	12/95→04/99						
325 tds	105	03/95→04/99						
328 i	142	02/95→04/99						
BMW - 3 Touring (E46) 06/99→07/05								
Guide Bolt, brake caliper								
316 i	85	03/02→02/05			2	**11.8171-0008.1**	**990049**	ATE
318 d	85	10/02→02/05						

© 2022 Continental Aftermarket & Services GmbH

	kW				! #			
BMW - 3 Touring (E46) 06/99→07/05								
Guide Bolt, brake caliper								
318 i 320 d 320 i 325 i 325 xi 328 i 330 xi	85 - 105 100 - 110 110 - 125 141 141 142 170	10/99→07/05 03/00→02/05 10/99→02/05 09/00→02/05 09/00→02/05 06/99→05/00 06/00→02/05			2	**11.8171-0008.1**	**990049**	ATE
330 d	135 - 150	10/99→02/05			2	**11.8171-0008.1**	**990049**	ATE
330 i	170	06/00→02/05	➡		2	**11.8171-0008.1**	**990049**	ATE
330 xd	135	01/00→03/03		06/00→	2	**11.8171-0008.1**	**990049**	ATE
330 xd	150	08/02→05/05		03/03→ 02/05	2	**11.8171-0008.1**	**990049**	ATE
Accessory Kit, parking brake shoes								
325 xi 330 d 330 i 330 xi	141 135 - 150 170 170	09/00→02/05 10/99→02/05 06/00→02/05 06/00→02/05				**03.0137-9700.2**	**669700**	
330 xd	135	01/00→03/03		06/00→		**03.0137-9700.2**	**669700**	
330 xd	150	08/02→05/05		03/03→ 02/05		**03.0137-9700.2**	**669700**	
BMW - 3 Touring (E91) 12/04→12/12								
Guide Bolt, brake caliper								
316 d	85	09/09→06/12	⬅		2	**11.8171-0008.1**	**990049**	ATE
316 i 318 d 318 i 320 d 320 d xDrive 320 i 323 i 325 d 325 i 330 d 330 d xDrive 330 i 330 i xDrive 330 xd 330 xi 335 d 335 i 335 i xDrive 335 xi	90 90 - 105 95 - 100 110 - 147 120 - 147 120 - 125 140 145 - 150 155 - 160 155 - 180 180 190 - 200 200 170 190 - 200 210 225 - 240 225 - 240 225 - 240	09/08→06/12 09/05→06/12 01/06→03/12 12/04→06/12 02/08→06/12 02/07→12/12 09/06→07/08 09/06→06/12 12/04→06/12 06/05→05/12 01/09→06/12 08/05→06/12 09/07→06/12 09/05→06/12 09/05→06/12 09/06→06/12 09/06→06/12 09/08→06/12 03/07→08/08	➡		2	**11.8171-0008.1**	**990049**	ATE
318 i	105	05/07→05/12	⬅	for increased payload	2	**11.8171-0008.1**	**990049**	ATE
			⬅	not for increased payload	2	**11.8171-0008.1**	**990049**	ATE
			➡		2	**11.8171-0008.1**	**990049**	ATE
320 i	110 - 115	09/05→06/12	⬅	Engine Code: N46	2	**11.8171-0008.1**	**990049**	ATE
			⬅	Engine Code: N46N	2	**11.8171-0008.1**	**990049**	ATE
			➡		2	**11.8171-0008.1**	**990049**	ATE
323 i	130	04/06→06/07		09/06→	2	**11.8171-0008.1**	**990049**	ATE
325 i	160	09/07→06/12	⬅	for increased payload	2	**11.8171-0008.1**	**990049**	ATE
			⬅	Engine Code: N52N/N53; not for increased payload	2	**11.8171-0008.1**	**990049**	ATE
			➡	for increased payload	2	**11.8171-0008.1**	**990049**	ATE
325 i xDrive	155 - 160	09/08→06/12	⬅	Engine Code: N52/N53/N25N	2	**11.8171-0008.1**	**990049**	ATE
			➡	Engine Code: N52/N53/N25N	2	**11.8171-0008.1**	**990049**	ATE
325 xi	155 - 160	08/05→08/08	⬅	Engine Code: N52/N53	2	**11.8171-0008.1**	**990049**	ATE

	kW				! #			
BMW - 3 Touring (E91) 12/04→12/12								
Guide Bolt, brake caliper								
325 xi	155 - 160	08/05→08/08	←	Engine Code: N52N	2	**11.8171-0008.1**	**990049**	ATE
			→	Engine Code: N52/N53	2	**11.8171-0008.1**	**990049**	ATE
			→	Engine Code: N52N; for increased payload	2	**11.8171-0008.1**	**990049**	ATE
330 d	170	12/04→08/08	←	09/07→	2	**11.8171-0008.1**	**990049**	ATE
			←	→ 08/07	2	**11.8171-0008.1**	**990049**	ATE
			→		2	**11.8171-0008.1**	**990049**	ATE
Accessory Kit, parking brake shoes								
316 d	85	09/09→06/12		for increased payload; → 05/12		**03.0137-9700.2**	**669700**	
316 i 318 d 318 i 320 i	90 105 100 110 - 115	09/08→06/12 09/07→06/12 09/07→03/12 09/05→06/12		→ 09/09		**03.0137-9700.2**	**669700**	
318 d 318 i 320 d 320 d xDrive 323 i 325 xi 330 d 330 d xDrive 330 i 330 xi 335 i 335 i xDrive 335 xi	90 95 110 - 120 130 - 147 140 155 - 160 155 180 190 190 225 - 240 225 - 240 225 - 240	09/05→08/07 01/06→08/07 12/04→06/12 02/08→06/12 09/06→07/08 08/05→08/08 06/05→05/12 01/09→06/12 08/05→08/07 09/05→08/07 09/06→06/12 09/08→06/12 03/07→08/08				**03.0137-9700.2**	**669700**	
318 d 318 i	100 105	07/07→06/12 05/07→05/12		09/07→ 09/09		**03.0137-9700.2**	**669700**	
320 d	130 - 145	02/07→12/10		09/07→ 09/09; not for increased payload		**03.0137-9700.2**	**669700**	
				09/07→; for increased payload		**03.0137-9700.2**	**669700**	
320 d	135 - 147	03/10→05/12		for increased payload		**03.0137-9700.2**	**669700**	
320 d xDrive 325 d 325 i 325 i xDrive 330 i 330 i xDrive 330 xd 330 xi 335 d	120 145 - 150 160 155 - 160 200 200 170 200 210	07/09→06/12 09/06→06/12 09/07→06/12 09/08→06/12 03/07→06/12 09/07→06/12 09/05→06/12 09/07→06/12 09/06→06/12		→ 05/12		**03.0137-9700.2**	**669700**	
320 i	120 - 125	02/07→12/12		10/09→; for vehicles with active steering		**03.0137-9700.2**	**669700**	
				09/07→ 09/09		**03.0137-9700.2**	**669700**	
323 i	130	04/06→06/07		09/06→		**03.0137-9700.2**	**669700**	
325 i 330 d	155 - 160 170	12/04→12/10 12/04→08/08		06/05→		**03.0137-9700.2**	**669700**	
325 i	155	09/07→06/12		01/12→ 05/12		**03.0137-9700.2**	**669700**	
330 d	180	02/08→05/12		09/08→		**03.0137-9700.2**	**669700**	
BMW - 3 Touring (F31) 07/12→06/19								
Accessory Kit, parking brake shoes								
318 d 318 d xDrive 318 i 320 d 320 d xDrive 320 i xDrive 325 d 328 i 328 i xDrive 330 d 330 d xDrive	110 105 - 110 100 120 - 147 120 - 147 120 - 135 165 180 180 190 190	07/15→06/19 07/13→02/18 07/15→06/19 07/12→06/19 03/13→06/19 03/13→06/19 03/16→02/18 07/12→06/15 03/13→06/16 07/12→06/19 03/13→06/19				**03.0137-9700.2**	**669700**	

© 2022 Continental Aftermarket & Services GmbH

	kW				! #			
BMW - 3 Touring (F31) 07/12→06/19								
Accessory Kit, parking brake shoes								
330 i 330 i xDrive 335 d xDrive 335 i 335 i xDrive 340 i 340 i xDrive	185 185 230 225 - 250 225 - 250 240 - 265 240 - 265	07/15→06/19 07/15→06/19 11/13→06/19 03/13→06/15 03/13→06/15 07/15→06/19 07/15→06/19					**03.0137-9700.2**	**669700**	
325 d	155 - 160	03/13→02/16		04/13→			**03.0137-9700.2**	**669700**	
330 d 330 d xDrive	210 210	07/12→06/19 03/13→06/19		09/15→			**03.0137-9700.2**	**669700**	
BMW - 3 Touring (G21, G81) 07/19→								
Brake Pad Set, disc brake								
316 d	85 - 90	11/20→	←	for vehicles with M-sport brakes			**13.0460-4897.2**	**604897**	BRE + WE / - WK
316 d Mild-Hybrid 318 d 318 d Mild-Hybrid 318 i 320 d 320 d Mild-Hybrid 320 d Mild-Hybrid xDrive 320 d xDrive 320 e Plug-in-Hybrid 320 e Plug-in-Hybrid xDrive 320 i	85 - 90 100 - 110 100 - 110 115 120 - 140 120 - 140 120 - 140 120 - 140 120 - 150 120 - 150 135	07/20→ 11/19→07/20 08/20→ 03/20→ 07/19→02/20 03/20→ 03/20→ 07/19→02/20 07/20→ 03/21→ 11/19→	→	for vehicles with M-sport brakes			**13.0460-5523.2** **13.0470-5523.2**	**605523** **LD5523**	+ WE / - WK + Zub + WE / - WK + Zub Ceramic
330 d 330 d Mild-Hybrid 330 d Mild-Hybrid xDrive 330 d xDrive 330 e Plug-in-Hybrid 330 e Plug-in-Hybrid xDrive 330 i 330 i xDrive	195 210 210 195 135 - 215 135 - 215 190 190	11/19→ 11/20→ 11/20→ 07/19→ 07/20→ 07/20→ 07/19→ 07/19→	←	for vehicles with M-sport brakes			**13.0460-4897.2**	**604897**	BRE + WE / - WK
			←	for vehicles without M-sport brakes			**13.0460-7345.2**	**607345**	ATE + WE / - WK
			→	for vehicles with M-sport brakes			**13.0460-5523.2** **13.0470-5523.2**	**605523** **LD5523**	+ WE / - WK + Zub + WE / - WK + Zub Ceramic
M 340 d Mild-Hybrid xDrive	250	04/20→	←	for vehicles with M-technology			**13.0460-4896.2**	**604896**	BRE + WE / - WK
M 340 i Mild-Hybrid xDrive	275	11/20→	←	for vehicles without M-technology			**13.0460-4897.2**	**604897**	BRE + WE / - WK
M 340 i xDrive	275 - 285	11/19→	→				**13.0460-5523.2**	**605523**	+ WE / - WK + Zub
Warning Contact, brake pad wear								
316 d	85 - 90	11/20→	←		1		**24.8190-0808.2**	**620808**	
316 d Mild-Hybrid 318 d 318 i 320 d 320 d Mild-Hybrid 320 d Mild-Hybrid xDrive 320 d xDrive 320 e Plug-in-Hybrid 320 e Plug-in-Hybrid xDrive 320 i 330 d 330 d Mild-Hybrid 330 d Mild-Hybrid xDrive 330 d xDrive	85 - 90 100 - 110 115 120 - 140 120 - 140 120 - 140 120 - 140 120 - 150 120 - 150 135 195 210 210 195	07/20→ 11/19→07/20 03/20→ 07/19→02/20 03/20→ 03/20→ 07/19→02/20 07/20→ 03/21→ 11/19→ 11/19→ 11/20→ 11/20→ 07/19→	→		1		**24.8190-0810.2**	**620810**	

	kW				! #			
BMW - 3 Touring (G21, G81) 07/19→								
Warning Contact, brake pad wear								
330 e Plug-in-Hybrid	135 - 215	07/20→	←		1	**24.8190-0808.2**	**620808**	
330 e Plug-in-Hybrid xDrive 330 i 330 i xDrive M 340 d Mild-Hybrid xDrive M 340 i Mild-Hybrid xDrive M 340 i xDrive	135 - 215 190 190 250 275 275 - 285	07/20→ 07/19→ 07/19→ 04/20→ 11/20→ 11/19→	→		1	**24.8190-0810.2**	**620810**	
318 d Mild-Hybrid	100 - 110	08/20→	←		1	**24.8190-0808.2**	**620808**	
BMW - 3 Touring Van (F31) 07/12→06/19								
Accessory Kit, parking brake shoes								
330 d 330 d xDrive 330 i 340 i	190 190 185 240	07/12→06/19 03/13→06/19 07/15→06/19 07/15→06/19				**03.0137-9700.2**	**669700**	
BMW - 3 Touring Van (G21) 07/19→								
Brake Pad Set, disc brake								
320 d 320 d Mild-Hybrid 320 d Mild-Hybrid xDrive 320 d xDrive 320 i	140 140 140 140 135	07/19→02/20 03/20→ 03/20→ 07/19→02/20 11/19→	←	for vehicles with M-sport brakes		**13.0460-4897.2**	**604897**	BRE + WE / - WK
			→	for vehicles with M-sport brakes		**13.0460-5523.2** **13.0470-5523.2**	**605523** **LD5523**	+ WE / - WK + Zub + WE / - WK + Zub Ceramic
330 d 330 d xDrive 330 i	195 195 190	11/19→ 11/19→ 07/19→	←	for vehicles with M-sport brakes		**13.0460-4897.2**	**604897**	BRE + WE / - WK
			←	for vehicles without M-sport brakes		**13.0460-7345.2**	**607345**	ATE + WE / - WK
			→	for vehicles with M-sport brakes		**13.0460-5523.2** **13.0470-5523.2**	**605523** **LD5523**	+ WE / - WK + Zub + WE / - WK + Zub Ceramic
M 340 i xDrive	275	11/19→	←	for vehicles with M-technology		**13.0460-4896.2**	**604896**	BRE + WE / - WK
			←	for vehicles without M-technology		**13.0460-4897.2**	**604897**	BRE + WE / - WK
			→			**13.0460-5523.2**	**605523**	+ WE / - WK + Zub
Warning Contact, brake pad wear								
320 d 320 d Mild-Hybrid 320 d Mild-Hybrid xDrive 320 d xDrive 320 i 330 d 330 d xDrive 330 i M 340 i xDrive	140 140 140 140 135 195 195 190 275	07/19→02/20 03/20→ 03/20→ 07/19→02/20 11/19→ 11/19→ 11/19→ 07/19→ 11/19→	←		1	**24.8190-0808.2**	**620808**	
			→		1	**24.8190-0810.2**	**620810**	
BMW - 4 Convertible (F33, F83) 10/13→								
Accessory Kit, parking brake shoes								
420 d 420 i 425 d 425 i 428 i 428 i xDrive 430 d 430 i 430 i xDrive 435 d xDrive 435 i 435 i xDrive 440 i 440 i xDrive M4 M4 Competition	140 120 - 135 155 - 165 135 180 180 190 - 210 185 185 230 225 - 250 225 - 250 240 - 265 240 - 265 317 331	07/15→ 07/14→ 07/14→02/18 06/17→ 11/13→02/17 03/14→02/16 07/14→ 03/16→ 03/16→ 07/14→ 11/13→02/16 07/14→02/16 03/16→ 03/16→ 07/14→ 03/16→				**03.0137-9700.2**	**669700**	

© 2022 Continental Aftermarket & Services GmbH

	kW				! #			
BMW - 4 Convertible (G23, G83) 11/20→								
Brake Pad Set, disc brake								
420 d Mild-Hybrid	120 - 140	11/20→	←	for vehicles with M-sport brakes		**13.0460-4897.2**	**604897**	BRE + WE / - WK
420 i	135	11/20→	→	for vehicles with M-sport brakes		**13.0460-5523.2**	**605523**	+ WE / - WK + Zub
						13.0470-5523.2	**LD5523**	+ WE / - WK + Zub Ceramic
430 d Mild-Hybrid	210	07/21→	←	for vehicles with M-sport brakes		**13.0460-4897.2**	**604897**	BRE + WE / - WK
			←	for vehicles without M-sport brakes		**13.0460-7345.2**	**607345**	ATE + WE / - WK
			→			**13.0460-5523.2**	**605523**	+ WE / - WK + Zub
						13.0470-5523.2	**LD5523**	+ WE / - WK + Zub Ceramic
430 i	180 - 190	11/20→	←	for vehicles with M-sport brakes		**13.0460-4897.2**	**604897**	BRE + WE / - WK
430 i xDrive	180	07/21→	←	for vehicles without M-sport brakes		**13.0460-7345.2**	**607345**	ATE + WE / - WK
			→	for vehicles with M-sport brakes		**13.0460-5523.2**	**605523**	+ WE / - WK + Zub
						13.0470-5523.2	**LD5523**	+ WE / - WK + Zub Ceramic
M440 d Mild-Hybrid xDrive	250	11/21→	←	for vehicles with M-technology		**13.0460-4896.2**	**604896**	BRE + WE / - WK
M 440 i Mild-Hybrid xDrive	275 - 285	11/20→	←	for vehicles without M-technology		**13.0460-4897.2**	**604897**	BRE + WE / - WK
			→			**13.0460-5523.2**	**605523**	+ WE / - WK + Zub
Warning Contact, brake pad wear								
420 d Mild-Hybrid	120 - 140	11/20→	←		1	**24.8190-0808.2**	**620808**	
420 i	135	11/20→	→		1	**24.8190-0810.2**	**620810**	
430 d Mild-Hybrid	210	07/21→						
430 i	180 - 190	11/20→						
430 i xDrive	180	07/21→						
M440 d Mild-Hybrid xDrive	250	11/21→						
M 440 i Mild-Hybrid xDrive	275 - 285	11/20→						
M4 Competition M xDrive	375	07/21→	←		1	**24.8190-0808.2**	**620808**	
BMW - 4 Coupe (F32, F82) 07/13→								
Accessory Kit, parking brake shoes								
418 d	100 - 110	03/15→10/17				**03.0137-9700.2**	**669700**	
418 i	100	03/16→						
420 d xDrive	120 - 147	11/13→						
420 i	120 - 135	03/16→						
420 i xDrive	120 - 135	11/13→						
425 d	165	03/16→10/17						
425 i	135	06/17→						
428 i	180	07/13→02/17						
428 i xDrive	180	07/13→02/16						
430 d	190 - 210	11/13→						
430 d xDrive	190 - 210	03/14→						
430 i	183 - 185	03/16→						
430 i xDrive	183 - 185	03/16→						
435 d xDrive	230	11/13→12/20						
435 i	225 - 250	07/13→02/16						
435 i xDrive	225 - 250	07/13→02/16						
440 i	240 - 265	03/16→						
440 i xDrive	240 - 265	03/16→						
M4	317	03/14→						
M4 Competition	331	03/16→						
M4 CS	338	07/17→06/19						
M4 GTS	368	03/16→02/17						
BMW - 4 Coupe (G22, G82) 07/20→								
Brake Pad Set, disc brake								
420 d Mild-Hybrid	140	07/20→	←	for vehicles with M-sport brakes		**13.0460-4897.2**	**604897**	BRE + WE / - WK
420 d Mild-Hybrid xDrive	120 - 140	07/20→	→	for vehicles with M-sport brakes		**13.0460-5523.2**	**605523**	+ WE / - WK + Zub
420 i	135	07/20→				**13.0470-5523.2**	**LD5523**	+ WE / - WK + Zub Ceramic
420 i 1.6	125	11/20→						
420 i xDrive	135	07/21→						

	kW				! #			
BMW - 4 Coupe (G22, G82) 07/20→								
Brake Pad Set, disc brake								
430 d Mild-Hybrid xDrive	210	03/21→	←	for vehicles with M-sport brakes		**13.0460-4897.2**	**604897**	BRE + WE / - WK
			←	for vehicles without M-sport brakes		**13.0460-7345.2**	**607345**	ATE + WE / - WK
			→			**13.0460-5523.2**	**605523**	+ WE / - WK + Zub
						13.0470-5523.2	**LD5523**	+ WE / - WK + Zub Ceramic
430 i	180 - 190	07/20→	←	for vehicles with M-sport brakes		**13.0460-4897.2**	**604897**	BRE + WE / - WK
430 i xDrive	180 - 190	07/21→	←	for vehicles without M-sport brakes		**13.0460-7345.2**	**607345**	ATE + WE / - WK
			→	for vehicles with M-sport brakes		**13.0460-5523.2**	**605523**	+ WE / - WK + Zub
						13.0470-5523.2	**LD5523**	+ WE / - WK + Zub Ceramic
M440 d Mild-Hybrid xDrive	250	03/21→	←	for vehicles with M-technology		**13.0460-4896.2**	**604896**	BRE + WE / - WK
M 440 i Mild-Hybrid	275	07/21→	←	for vehicles without M-technology		**13.0460-4897.2**	**604897**	BRE + WE / - WK
M 440 i Mild-Hybrid xDrive	285	07/20→	→			**13.0460-5523.2**	**605523**	+ WE / - WK + Zub
Warning Contact, brake pad wear								
420 d Mild-Hybrid	140	07/20→	←		1	**24.8190-0808.2**	**620808**	
420 d Mild-Hybrid xDrive	120 - 140	07/20→	→		1	**24.8190-0810.2**	**620810**	
420 i	135	07/20→						
420 i 1.6	125	11/20→						
420 i xDrive	135	07/21→						
430 d Mild-Hybrid xDrive	210	03/21→						
430 i	180 - 190	07/20→						
430 i xDrive	180 - 190	07/21→						
M440 d Mild-Hybrid xDrive	250	03/21→						
M 440 i Mild-Hybrid	275	07/21→						
M 440 i Mild-Hybrid xDrive	285	07/20→						
M4	353	11/20→	←		1	**24.8190-0808.2**	**620808**	
M4 Competition	375	11/20→						
M4 Competition M xDrive	375	05/21→						
BMW - 4 Gran Coupe (F36) 03/14→								
Accessory Kit, parking brake shoes								
418 d	110	07/15→				**03.0137-9700.2**	**669700**	
418 i	100	07/15→						
420 d	140	03/15→						
420 d xDrive	120 - 147	03/14→						
420 i	120 - 135	03/14→						
420 i xDrive	120 - 135	07/14→						
425 d	155 - 165	03/16→02/18						
425 i	135	06/17→						
428 i	180	03/14→06/16						
428 i xDrive	180	03/14→02/16						
430 d	190 - 210	07/14→						
430 d xDrive	190 - 210	07/14→						
430 i	185	03/16→						
430 i xDrive	183 - 185	03/16→						
435 d xDrive	230	07/14→						
435 i	225 - 250	03/14→02/16						
435 i xDrive	225 - 250	07/14→02/16						
440 i	240 - 265	03/16→						
440 i xDrive	240 - 265	03/16→						
BMW - 4 Gran Coupe (G26) 07/21→								
Brake Pad Set, disc brake								
420 d Mild-Hybrid	140	07/21→	←	for vehicles with M-sport brakes		**13.0460-4897.2**	**604897**	BRE + WE / - WK
420 d Mild-Hybrid xDrive	140	07/21→	→	for vehicles with M-sport brakes		**13.0460-5523.2**	**605523**	+ WE / - WK + Zub
420 i	135	07/21→				**13.0470-5523.2**	**LD5523**	+ WE / - WK + Zub Ceramic
430 i	190	07/21→	←	for vehicles with M-sport brakes		**13.0460-4897.2**	**604897**	BRE + WE / - WK
			←	for vehicles without M-sport brakes		**13.0460-7345.2**	**607345**	ATE + WE / - WK

© 2022 Continental Aftermarket & Services GmbH

	kW				! #			
BMW - 4 Gran Coupe (G26) 07/21→								
Brake Pad Set, disc brake								
430 i	190	07/21→	➡	for vehicles with M-sport brakes		**13.0460-5523.2**	**605523**	+ WE / - WK + Zub
						13.0470-5523.2	**LD5523**	+ WE / - WK + Zub Ceramic
M440 i Mild-Hybrid xDrive	275	07/21→	⬅	for vehicles with M-technology		**13.0460-4896.2**	**604896**	BRE + WE / - WK
			⬅	for vehicles without M-technology		**13.0460-4897.2**	**604897**	BRE + WE / - WK
			➡			**13.0460-5523.2**	**605523**	+ WE / - WK + Zub
Warning Contact, brake pad wear								
420 d Mild-Hybrid 420 d Mild-Hybrid xDrive 420 i 430 i M440 i Mild-Hybrid xDrive	140 140 135 190 275	07/21→ 07/21→ 07/21→ 07/21→ 07/21→	⬅		1	**24.8190-0808.2**	**620808**	
			➡		1	**24.8190-0810.2**	**620810**	
BMW - 5 (E28) 05/81→12/87								
Guide Bolt, brake caliper								
518	66	06/81→09/84	⬅	- ABS; not for government vehicles	2	**11.8171-0008.1**	**990049**	ATE
			⬅	+ ABS; for government vehicles	2	**11.8171-0008.1**	**990049**	ATE
			➡	+ ABS	2	**11.8171-0008.1**	**990049**	ATE
518 i	75 - 77	05/81→12/87	⬅	11/83→; - ABS; not for government vehicles	2	**11.8171-0008.1**	**990049**	ATE
			⬅	11/83→; + ABS; for government vehicles	2	**11.8171-0008.1**	**990049**	ATE
			➡	11/83→; + ABS	2	**11.8171-0008.1**	**990049**	ATE
520 i 524 td	92 85	06/81→12/87 09/83→12/87	⬅	09/84→; - ABS	2	**11.8171-0008.1**	**990049**	ATE
			⬅	→ 08/84; - ABS; not for government vehicles	2	**11.8171-0008.1**	**990049**	ATE
			⬅	+ ABS; for government vehicles	2	**11.8171-0008.1**	**990049**	ATE
			➡	→ 03/86; + ABS	2	**11.8171-0008.1**	**990049**	ATE
			➡	04/86→	2	**11.8171-0008.1**	**990049**	ATE
520 i	95	08/85→12/87	⬅	- ABS	2	**11.8171-0008.1**	**990049**	ATE
			⬅	+ ABS; for government vehicles	2	**11.8171-0008.1**	**990049**	ATE
			➡	→ 03/86; + ABS	2	**11.8171-0008.1**	**990049**	ATE
			➡	04/86→	2	**11.8171-0008.1**	**990049**	ATE
520 i	110	12/86→12/87	⬅	- ABS	2	**11.8171-0008.1**	**990049**	ATE
			⬅	+ ABS; for government vehicles	2	**11.8171-0008.1**	**990049**	ATE
			➡		2	**11.8171-0008.1**	**990049**	ATE
524 d	63	03/86→12/87	⬅	05/86→	2	**11.8171-0008.1**	**990049**	ATE
			➡	05/86→	2	**11.8171-0008.1**	**990049**	ATE
525 e	90 - 95	09/81→12/87	⬅		2	**11.8171-0008.1**	**990049**	ATE
525 i 535 i M 535 i	110 136 - 162 136 - 141	06/81→12/87 01/85→12/87 01/85→12/87	➡		2	**11.8171-0008.1**	**990049**	ATE
528 i	135	06/81→12/87	⬅	06/84→	2	**11.8171-0008.1**	**990049**	ATE
			⬅	→ 05/84	2	**11.8171-0008.1**	**990049**	ATE
			➡		2	**11.8171-0008.1**	**990049**	ATE
M5	210	08/85→12/87	➡		2	**11.8171-0008.1**	**990049**	ATE
BMW - 5 (E34) 02/87→12/95								
Guide Bolt, brake caliper								
518 i	83 - 85	09/89→08/95	⬅		2	**11.8171-0008.1**	**990049**	ATE
			➡	+ ABS	2	**11.8171-0008.1**	**990049**	ATE
520 i 520 i 24V 524 td 525 i 525 i 24V 525 iX 24V 525 td 525 tds 530 i 530 i V8 535 i	95 110 85 125 141 141 85 105 138 160 155	06/87→09/90 04/90→08/95 03/88→08/91 02/88→08/90 03/90→08/95 10/91→08/95 03/93→08/95 09/91→08/95 01/88→04/90 09/92→12/95 11/87→02/93	⬅		2	**11.8171-0008.1**	**990049**	ATE
			➡		2	**11.8171-0008.1**	**990049**	ATE

	kW				! #		
BMW - 5 (E34) 02/87→12/95							
Guide Bolt, brake caliper							
540 i V8	210	09/92→12/95	←		2	**11.8171-0008.1** **990049**	ATE
			→		2	**11.8171-0008.1** **990049**	ATE
M5	232	09/88→03/92	←		2	**11.8171-0008.1** **990049**	ATE
			→	01/90→	2	**11.8171-0008.1** **990049**	ATE
			→	→ 12/89	2	**11.8171-0008.1** **990049**	ATE
M5	250	01/92→07/95	←	→ 05/94	2	**11.8171-0008.1** **990049**	ATE
			→	06/94→	2	**11.8171-0008.1** **990049**	ATE
			→	→ 05/94	2	**11.8171-0008.1** **990049**	ATE
BMW - 5 (E39) 09/95→07/03							
Guide Bolt, brake caliper							
520 d 525 d	100 120	02/00→06/03 02/00→06/03	←	04/00→	2	**11.8171-0008.1** **990049**	ATE
			→	04/00→	2	**11.8171-0008.1** **990049**	ATE
520 i	100	01/96→06/03		→ 03/00; for government vehicles	2	**11.8171-0008.1** **990049**	ATE
			←	04/00→; for government vehicles	2	**11.8171-0008.1** **990049**	ATE
			←	not for government vehicles	2	**11.8171-0008.1** **990049**	ATE
			→		2	**11.8171-0008.1** **990049**	ATE
520 i	110	01/96→06/03		03/96→ 03/00; for government vehicles	2	**11.8171-0008.1** **990049**	ATE
			←	11/96→; not for government vehicles	2	**11.8171-0008.1** **990049**	ATE
			←	04/00→; for government vehicles	2	**11.8171-0008.1** **990049**	ATE
			←	03/96→ 10/96; not for government vehicles	2	**11.8171-0008.1** **990049**	ATE
			→	03/96→	2	**11.8171-0008.1** **990049**	ATE
520 i	120 - 125	09/00→06/03	←	not for government vehicles	2	**11.8171-0008.1** **990049**	ATE
			←	for government vehicles	2	**11.8171-0008.1** **990049**	ATE
			→		2	**11.8171-0008.1** **990049**	ATE
523 i	125	09/95→08/00	←	12/95→ 10/96	2	**11.8171-0008.1** **990049**	ATE
			←	11/96→	2	**11.8171-0008.1** **990049**	ATE
			→	12/95→ 08/98	2	**11.8171-0008.1** **990049**	ATE
			→	09/98→	2	**11.8171-0008.1** **990049**	ATE
525 i 530 i	141 170	09/00→06/03 09/00→06/03	←	10/00→	2	**11.8171-0008.1** **990049**	ATE
			→	10/00→	2	**11.8171-0008.1** **990049**	ATE
525 td	85	01/97→06/03	←	→ 09/00	2	**11.8171-0008.1** **990049**	ATE
			→	→ 09/00	2	**11.8171-0008.1** **990049**	ATE
525 tds	105	01/96→06/03	←	02/96→ 10/96	2	**11.8171-0008.1** **990049**	ATE
			←	11/96→ 09/00	2	**11.8171-0008.1** **990049**	ATE
			→	02/96→ 09/00	2	**11.8171-0008.1** **990049**	ATE
528 i	142	09/95→08/00	←	12/95→ 10/96	2	**11.8171-0008.1** **990049**	ATE
			←	11/96→	2	**11.8171-0008.1** **990049**	ATE
			→	12/95→	2	**11.8171-0008.1** **990049**	ATE
530 d	135	08/98→09/00	←	09/98→	2	**11.8171-0008.1** **990049**	ATE
			→	09/98→	2	**11.8171-0008.1** **990049**	ATE
530 d	142	09/98→06/03	←	10/00→	2	**11.8171-0008.1** **990049**	ATE
			←	→ 09/00	2	**11.8171-0008.1** **990049**	ATE
			→		2	**11.8171-0008.1** **990049**	ATE
535 i	173	06/96→08/98		09/97→	2	**11.8171-0008.1** **990049**	ATE
			←	11/96→ 08/97	2	**11.8171-0008.1** **990049**	ATE
			←	→ 10/96	2	**11.8171-0008.1** **990049**	ATE
			→		2	**11.8171-0008.1** **990049**	ATE
535 i	180	09/98→06/03		→ 03/00	2	**11.8171-0008.1** **990049**	ATE
			←	04/00→	2	**11.8171-0008.1** **990049**	ATE
			→		2	**11.8171-0008.1** **990049**	ATE
540 i	210	03/96→06/03		05/96→ 03/00	2	**11.8171-0008.1** **990049**	ATE
			←	04/00→	2	**11.8171-0008.1** **990049**	ATE
			→	05/96→	2	**11.8171-0008.1** **990049**	ATE

© 2022 Continental Aftermarket & Services GmbH

	kW				! #			
BMW - 5 (E39) 09/95→07/03								
Guide Bolt, brake caliper								
M5	294	10/98→06/03	←		2	**11.8171-0008.1**	**990049**	ATE
			→		2	**11.8171-0008.1**	**990049**	ATE
Accessory Kit, parking brake shoes								
520 d 525 d	100 120	02/00→06/03 02/00→06/03		04/00→		**03.0137-9700.2**	**669700**	
520 i 530 d 535 i	100 - 125 142 173 - 180	01/96→06/03 09/98→06/03 06/96→06/03				**03.0137-9700.2**	**669700**	
520 i	110	01/96→06/03		03/96→		**03.0137-9700.2**	**669700**	
523 i 528 i	125 142	09/95→08/00 09/95→08/00		12/95→		**03.0137-9700.2**	**669700**	
525 i 530 i	141 170	09/00→06/03 09/00→06/03		10/00→		**03.0137-9700.2**	**669700**	
525 td	85	01/97→06/03		→ 09/00		**03.0137-9700.2**	**669700**	
525 tds	105	01/96→06/03		02/96→ 09/00		**03.0137-9700.2**	**669700**	
530 d	135	08/98→09/00		09/98→		**03.0137-9700.2**	**669700**	
540 i	210	03/96→06/03		05/96→		**03.0137-9700.2**	**669700**	
BMW - 5 (E60) 12/01→03/10								
Guide Bolt, brake caliper								
520 d 525 d xDrive 525 i 525 xi 530 d xDrive 530 i xDrive 530 xd 530 xi	110 - 130 145 141 160 173 200 173 200	09/05→12/09 09/07→12/09 09/03→02/05 04/05→12/09 09/07→12/09 09/08→12/09 03/07→08/07 03/07→10/09			2	**11.8171-0008.1**	**990049**	ATE
520 i	125	07/03→03/10		Manual Transmission; → 03/05	2	**11.8171-0008.1**	**990049**	ATE
				Automatic Transmission; → 03/05	2	**11.8171-0008.1**	**990049**	ATE
				→ 03/05	2	**11.8171-0008.1**	**990049**	ATE
523 i 530 xd 530 xi	130 170 190	10/04→02/07 02/05→02/07 09/04→02/07		07/05→	2	**11.8171-0008.1**	**990049**	ATE
523 i	140	03/07→12/09			2	**11.8171-0008.1**	**990049**	ATE
				Engine Code: N52N	2	**11.8171-0008.1**	**990049**	ATE
				Engine Code: N53	2	**11.8171-0008.1**	**990049**	ATE
525 d	120 - 130	06/04→03/10		Manual Transmission; → 03/07	2	**11.8171-0008.1**	**990049**	ATE
				Automatic Transmission; → 03/07	2	**11.8171-0008.1**	**990049**	ATE
				→ 03/07	2	**11.8171-0008.1**	**990049**	ATE
525 d	145	01/07→03/10		03/07→ 02/10	2	**11.8171-0008.1**	**990049**	ATE
			→	03/07→ 02/10; for government vehicles	2	**11.8171-0008.1**	**990049**	ATE
525 i	137	07/03→12/09		07/05→ 03/07	2	**11.8171-0008.1**	**990049**	ATE
525 i	155 - 160	07/05→03/10		03/07→ 02/10; Engine Code: N52N	2	**11.8171-0008.1**	**990049**	ATE
				03/07→ 02/10; Engine Code: N53	2	**11.8171-0008.1**	**990049**	ATE
				03/07→; Engine Code: N53; not for government vehicles; → 02/10	2	**11.8171-0008.1**	**990049**	ATE
				→ 03/07	2	**11.8171-0008.1**	**990049**	ATE
			→	03/07→ 02/10; Engine Code: N53; for government vehicles	2	**11.8171-0008.1**	**990049**	ATE
525 i	160	03/05→12/09		07/05→ 03/07	2	**11.8171-0008.1**	**990049**	ATE
				03/07→; Engine Code: N52N	2	**11.8171-0008.1**	**990049**	ATE
				03/07→; Engine Code: N53; not for government vehicles	2	**11.8171-0008.1**	**990049**	ATE
				03/07→; Engine Code: N53	2	**11.8171-0008.1**	**990049**	ATE
			→	03/07→; Engine Code: N53; for government vehicles	2	**11.8171-0008.1**	**990049**	ATE
525 i 530 i	160 190	03/05→03/07 03/05→03/07		07/05→	2	**11.8171-0008.1**	**990049**	ATE
			→	07/05→; for government vehicles	2	**11.8171-0008.1**	**990049**	ATE
525 i xDrive	160	09/08→03/10		→ 02/10	2	**11.8171-0008.1**	**990049**	ATE
525 xd 530 xi	145 200	11/06→08/07 02/07→08/08		03/07→	2	**11.8171-0008.1**	**990049**	ATE
528 i 530 i	172 200	03/07→12/09 03/07→12/09		Engine Code: N53	2	**11.8171-0008.1**	**990049**	ATE
				Engine Code: N52N	2	**11.8171-0008.1**	**990049**	ATE

	kW				! #			
BMW - 5 (E60) 12/01→03/10								
Guide Bolt, brake caliper								
528 i 530 i	172 200	03/07→12/09 03/07→12/09	➡	for government vehicles; Engine Code: N52N	2	**11.8171-0008.1**	**990049**	ATE
			➡	Engine Code: N53	2	**11.8171-0008.1**	**990049**	ATE
530 d	155 - 160	09/02→12/09		07/03→ 08/05	2	**11.8171-0008.1**	**990049**	ATE
			➡	07/03→; for government vehicles; → 08/05	2	**11.8171-0008.1**	**990049**	ATE
530 d	170	09/05→03/07			2	**11.8171-0008.1**	**990049**	ATE
			➡	for government vehicles	2	**11.8171-0008.1**	**990049**	ATE
530 d	173	02/07→12/09		03/07→	2	**11.8171-0008.1**	**990049**	ATE
			➡	03/07→; for government vehicles	2	**11.8171-0008.1**	**990049**	ATE
530 i	170	12/01→02/05		07/03→	2	**11.8171-0008.1**	**990049**	ATE
530 i	187	03/05→03/10		07/05→ 03/07	2	**11.8171-0008.1**	**990049**	ATE
			➡	07/05→ 03/07; for government vehicles	2	**11.8171-0008.1**	**990049**	ATE
535 d	200	09/04→03/10	➡	→ 03/07	2	**11.8171-0008.1**	**990049**	ATE
535 d	210	01/07→03/10	➡	03/07→ 02/10	2	**11.8171-0008.1**	**990049**	ATE
535 i	225	04/06→12/09		→ 03/07	2	**11.8171-0008.1**	**990049**	ATE
				03/07→; not for increased payload	2	**11.8171-0008.1**	**990049**	ATE
			➡	03/07→	2	**11.8171-0008.1**	**990049**	ATE
			➡	→ 03/07	2	**11.8171-0008.1**	**990049**	ATE
540 i 545 i	220 245	09/05→02/07 09/03→08/05			2	**11.8171-0008.1**	**990049**	ATE
			➡		2	**11.8171-0008.1**	**990049**	ATE
540 i	225	03/07→12/09		not for increased payload	2	**11.8171-0008.1**	**990049**	ATE
			➡		2	**11.8171-0008.1**	**990049**	ATE
550 i M5	270 373	09/05→12/09 09/04→12/09	➡		2	**11.8171-0008.1**	**990049**	ATE
Sensor, wheel speed								
520 d 520 i 523 i 525 i 528 i 530 d 530 i 535 i 540 i 545 i 550 i	110 - 130 115 - 125 140 141 172 170 200 225 220 - 225 245 270	09/05→12/09 12/06→03/10 03/07→12/09 09/03→02/05 03/07→12/09 09/05→03/07 03/07→12/09 04/06→12/09 09/05→12/09 09/03→08/05 09/05→12/09	⬅		2	**24.0710-2055.3**	**360576**	L= 680
520 i	125	07/03→03/10	⬅	→ 03/05	2	**24.0710-2055.3**	**360576**	L= 680
523 i 525 i 530 i	130 137 - 160 190	10/04→02/07 07/03→12/09 03/05→03/07	⬅	07/05→	2	**24.0710-2055.3**	**360576**	L= 680
525 d 535 d	120 - 130 200	06/04→03/10 09/04→03/10	⬅	→ 03/07	2	**24.0710-2055.3**	**360576**	L= 680
525 d 535 d	145 210	01/07→03/10 01/07→03/10	⬅	03/07→ 02/10	2	**24.0710-2055.3**	**360576**	L= 680
525 i	155 - 160	07/05→03/10	⬅	→ 02/10	2	**24.0710-2055.3**	**360576**	L= 680
530 d	155 - 160	09/02→12/09	⬅	07/03→ 08/05	2	**24.0710-2055.3**	**360576**	L= 680
530 d	173	02/07→12/09	⬅	03/07→	2	**24.0710-2055.3**	**360576**	L= 680
530 i	170	12/01→02/05	⬅	07/03→	2	**24.0710-2055.3**	**360576**	L= 680
530 i	187	03/05→03/10	⬅	07/05→ 03/07	2	**24.0710-2055.3**	**360576**	L= 680
BMW - 5 (F10) 01/09→10/16								
Guide Bolt, brake caliper								
518 d 520 d 520 d xDrive 520 i	100 - 110 100 - 151 100 - 151 120 - 135	07/13→10/16 06/10→10/16 01/13→10/16 09/11→10/16			2	**11.8171-0008.1**	**990049**	ATE
518 d	120	10/13→10/16		07/14→	2	**11.8171-0008.1**	**990049**	ATE

© 2022 Continental Aftermarket & Services GmbH

	kW				! #			
BMW - 5 (F10) 01/09→10/16								
Guide Bolt, brake caliper								
520 d 520 d xDrive	155 155	10/13→10/16 10/13→10/16		07/14→	2	**11.8171-0008.1**	**990049**	ATE
520 d xDrive	147	01/13→06/14		02/13→	2	**11.8171-0008.1**	**990049**	ATE
523 i	150 - 155	06/09→08/11		03/10→	2	**11.8171-0008.1**	**990049**	ATE
525 d 525 d xDrive 528 i 528 i xDrive 530 d 530 d xDrive	150 - 160 155 - 160 180 - 190 180 190 190	03/10→10/16 09/11→10/16 03/10→10/16 09/11→10/16 09/11→10/16 03/11→10/16		not for vehicles with reinforced brakes	2	**11.8171-0008.1**	**990049**	ATE
530 d	180	01/10→08/11		03/10→; not for vehicles with reinforced brakes	2	**11.8171-0008.1**	**990049**	ATE
530 d 530 d xDrive	210 210	09/10→10/16 03/11→10/16		10/15→; not for vehicles with reinforced brakes	2	**11.8171-0008.1**	**990049**	ATE
530 i	190 - 200	03/10→06/13		09/11→; not for vehicles with reinforced brakes	2	**11.8171-0008.1**	**990049**	ATE
Brake Hose								
518 d	100 - 110	07/13→10/16	←		2	**24.5118-0688.3**	**331419**	L= 718
520 d 520 d xDrive 520 i 525 d 525 d xDrive 528 i 528 i xDrive 530 d 530 d xDrive 535 d 535 d xDrive 535 i 535 i xDrive 550 i 550 i xDrive ActiveHybrid M 550 d xDrive	100 - 151 100 - 151 120 - 135 150 - 160 155 - 160 180 - 190 180 190 190 220 - 230 230 240 225 - 240 300 - 330 330 225 - 250 280	06/10→10/16 01/13→10/16 09/11→10/16 03/10→10/16 09/11→10/16 03/10→10/16 09/11→10/16 09/11→10/16 03/11→10/16 09/10→10/16 09/11→10/16 07/13→10/16 03/11→10/16 03/10→10/16 07/13→10/16 12/11→10/16 03/12→10/16	→		2	**24.5170-0285.3**	**331554**	L= 285
518 d 520 d 520 d xDrive	120 155 155	10/13→10/16 10/13→10/16 10/13→10/16	← →	07/14→ 07/14→	2 2	**24.5118-0688.3** **24.5170-0285.3**	**331419** **331554**	L= 718 L= 285
520 d xDrive	147	01/13→06/14	← →	02/13→ 02/13→	2 2	**24.5118-0688.3** **24.5170-0285.3**	**331419** **331554**	L= 718 L= 285
523 i 530 d 535 i	150 - 155 180 225	06/09→08/11 01/10→08/11 01/10→10/16	← →	03/10→ 03/10→	2 2	**24.5118-0688.3** **24.5170-0285.3**	**331419** **331554**	L= 718 L= 285
530 d 530 d xDrive	210 210	09/10→10/16 03/11→10/16	← →	10/15→ 10/15→	2 2	**24.5118-0688.3** **24.5170-0285.3**	**331419** **331554**	L= 718 L= 285
530 i	190 - 200	03/10→06/13	← →	09/11→ 09/11→	2 2	**24.5118-0688.3** **24.5170-0285.3**	**331419** **331554**	L= 718 L= 285
550 i xDrive	300	08/10→06/13	← →	09/10→ 09/10→	2 2	**24.5118-0688.3** **24.5170-0285.3**	**331419** **331554**	L= 718 L= 285
BMW - 5 (G30, F90) 09/16→								
Brake Pad Set, disc brake								
518 d Mild-Hybrid 520 d Mild-Hybrid 520 d Mild-Hybrid xDrive 520 i Mild-Hybrid	100 - 110 120 - 140 140 120 - 135	07/20→ 11/19→ 11/19→ 07/20→	←	for vehicles with M-sport brakes		**13.0460-4897.2**	**604897**	BRE + WE / - WK

	kW				! #			
BMW - 5 (G30, F90) 09/16→								
Brake Pad Set, disc brake								
520 E PLUG-IN-HYBRID	120 - 150	03/21→	←	for vehicles with sports package		**13.0460-4897.2**	**604897**	BRE + WE / - WK
525 d	155 - 170	07/17→06/19	←	for vehicles without sports package		**13.0460-7345.2**	**607345**	ATE + WE / - WK
530 d	195	09/16→06/20						
530 d xDrive	183 - 195	09/16→06/20						
530 e Plug-in-Hybrid	120 - 185	03/17→						
530 e Plug-in-Hybrid xDrive	120 - 185	03/17→						
530 i	185	09/16→06/20						
530 i xDrive	183 - 185	09/16→						
M 550 i xDrive	390	07/19→						
530 d Mild-Hybrid	183 - 210	07/20→	←	for vehicles with M-sport brakes		**13.0460-4897.2**	**604897**	BRE + WE / - WK
530 d Mild-Hybrid xDrive	183 - 210	07/20→	←	for vehicles without M-sport brakes		**13.0460-7345.2**	**607345**	ATE + WE / - WK
530 e Plug-in-Hybrid	200 - 215	07/20→						
530 e Plug-in-Hybrid xDrive	200 - 215	07/20→						
530 i Mild-Hybrid	185	07/20→						
530 i Mild-Hybrid xDrive	185	07/20→						
540 d Mild-Hybrid xDrive	250	07/20→	←	for vehicles with M-sport brakes		**13.0460-4896.2**	**604896**	BRE + WE / - WK
540 i Mild-Hybrid	245	07/20→						
540 i Mild-Hybrid xDrive	245	07/20→	←	for vehicles without M-sport brakes		**13.0460-4897.2**	**604897**	BRE + WE / - WK
545 e Plug-in-Hybrid xDrive	210 - 290	11/20→						
540 d xDrive	235	07/17→06/20	←	for vehicles with sports package		**13.0460-4896.2**	**604896**	BRE + WE / - WK
540 i	250 - 265	09/16→06/20	←	for vehicles without sports package		**13.0460-4897.2**	**604897**	BRE + WE / - WK
540 i xDrive	250 - 265	09/16→06/20						
M 550 d xDrive	294	06/17→						
M5	441	09/17→	←			**13.0460-4896.2**	**604896**	BRE + WE / - WK
M 550 i xDrive	340	03/17→06/19						
M5 Competition	460	07/18→						
M5 CS	467	03/21→						
BMW - 5 Gran Turismo (F07) 01/09→02/17								
Guide Bolt, brake caliper								
520 d	100 - 120	07/12→02/17	→		2	**11.8171-0008.1**	**990049**	ATE
530 d	155 - 190	09/10→02/17						
530 d xDrive	190	07/12→02/17						
535 d	220 - 230	03/10→02/17						
535 d xDrive	230	07/12→02/17						
535 i xDrive	225	09/10→02/17						
550 i	330	07/12→02/17						
550 i xDrive	330	07/12→02/17						
520 d	135	04/11→02/17	→	10/11→	2	**11.8171-0008.1**	**990049**	ATE
528 i	180	07/13→02/17	→	08/13→	2	**11.8171-0008.1**	**990049**	ATE
530 d	180	08/09→06/12	→	10/09→	2	**11.8171-0008.1**	**990049**	ATE
535 i	225	01/09→02/17						
550 i	300	08/09→06/12						
530 d xDrive	180	06/10→06/12	→	09/10→	2	**11.8171-0008.1**	**990049**	ATE
535 d xDrive	220	03/10→06/12						
550 i xDrive	300	06/10→06/12						
Brake Hose								
520 d	100 - 120	07/12→02/17	←		2	**24.5118-0688.3**	**331419**	L= 718
530 d	155 - 190	09/10→02/17	→		2	**24.5170-0285.3**	**331554**	L= 285
530 d xDrive	190	07/12→02/17						
535 d	220 - 230	03/10→02/17						
535 d xDrive	230	07/12→02/17						
535 i xDrive	225	09/10→02/17						
550 i	330	07/12→02/17						
550 i xDrive	330	07/12→02/17						
520 d	135	04/11→02/17	←	10/11→	2	**24.5118-0688.3**	**331419**	L= 718
			→	10/11→	2	**24.5170-0285.3**	**331554**	L= 285
528 i	180	07/13→02/17	←	08/13→	2	**24.5118-0688.3**	**331419**	L= 718
			→	08/13→	2	**24.5170-0285.3**	**331554**	L= 285

© 2022 Continental Aftermarket & Services GmbH

	kW				! #			
BMW - 5 Gran Turismo (F07) 01/09→02/17								
Brake Hose								
530 d 535 i 550 i	180 225 300	08/09→06/12 01/09→02/17 08/09→06/12	←	10/09→	2	**24.5118-0688.3**	**331419**	L= 718
			→	10/09→	2	**24.5170-0285.3**	**331554**	L= 285
530 d xDrive 535 d xDrive 550 i xDrive	180 220 300	06/10→06/12 03/10→06/12 06/10→06/12	←	09/10→	2	**24.5118-0688.3**	**331419**	L= 718
			→	09/10→	2	**24.5170-0285.3**	**331554**	L= 285
BMW - 5 Touring (E34) 07/91→07/96								
Guide Bolt, brake caliper								
518 g M5	85 250	02/96→07/96 04/92→07/95	→		2	**11.8171-0008.1**	**990049**	ATE
518 i 520 i 525 i 525 ix 525 td 525 tds 530 i 540 i	83 110 141 141 85 105 160 210	04/93→04/94 07/91→07/96 07/91→07/96 01/92→03/96 03/93→07/96 12/91→07/96 09/92→07/96 09/93→07/96	←		2	**11.8171-0008.1**	**990049**	ATE
			→		2	**11.8171-0008.1**	**990049**	ATE
518 i	85	05/94→07/96	←	→ 09/95	2	**11.8171-0008.1**	**990049**	ATE
			→		2	**11.8171-0008.1**	**990049**	ATE
BMW - 5 Touring (E39) 09/96→06/04								
Guide Bolt, brake caliper								
520 d 525 d	100 120	02/00→09/03 02/00→05/04	←	04/00→ 07/03	2	**11.8171-0008.1**	**990049**	ATE
			→	04/00→ 07/03	2	**11.8171-0008.1**	**990049**	ATE
520 i	100	03/97→08/01		→ 03/00; for government vehicles	2	**11.8171-0008.1**	**990049**	ATE
			←	04/00→; for government vehicles	2	**11.8171-0008.1**	**990049**	ATE
			←	not for government vehicles	2	**11.8171-0008.1**	**990049**	ATE
			→		2	**11.8171-0008.1**	**990049**	ATE
520 i	110	03/97→08/01		05/97→ 03/00; for government vehicles	2	**11.8171-0008.1**	**990049**	ATE
			←	04/00→; for government vehicles	2	**11.8171-0008.1**	**990049**	ATE
			←	05/97→; not for government vehicles	2	**11.8171-0008.1**	**990049**	ATE
			→	05/97→	2	**11.8171-0008.1**	**990049**	ATE
520 i	120 - 125	09/00→12/03	←	→ 07/03; for government vehicles	2	**11.8171-0008.1**	**990049**	ATE
			←	→ 07/03; not for government vehicles	2	**11.8171-0008.1**	**990049**	ATE
			→	→ 07/03	2	**11.8171-0008.1**	**990049**	ATE
523 i	120	09/98→08/00	←		2	**11.8171-0008.1**	**990049**	ATE
			→		2	**11.8171-0008.1**	**990049**	ATE
523 i 528 i	125 142	03/97→08/00 11/96→08/00	←	05/97→	2	**11.8171-0008.1**	**990049**	ATE
			→	05/97→	2	**11.8171-0008.1**	**990049**	ATE
525 i 530 i	141 170	09/00→05/04 09/00→12/03	←	10/00→ 07/03	2	**11.8171-0008.1**	**990049**	ATE
			→	10/00→ 07/03	2	**11.8171-0008.1**	**990049**	ATE
525 tds	105	03/97→05/04	←	06/98→ 09/00	2	**11.8171-0008.1**	**990049**	ATE
			→	06/98→ 09/00	2	**11.8171-0008.1**	**990049**	ATE
530 d	135	08/98→09/00	←	09/98→	2	**11.8171-0008.1**	**990049**	ATE
			→	09/98→	2	**11.8171-0008.1**	**990049**	ATE
530 d	142	09/00→05/04	←	10/00→ 07/03	2	**11.8171-0008.1**	**990049**	ATE
			←	→ 09/00	2	**11.8171-0008.1**	**990049**	ATE
			→	→ 07/03	2	**11.8171-0008.1**	**990049**	ATE
540 i	210	04/97→12/03		05/97→ 03/00	2	**11.8171-0008.1**	**990049**	ATE
			←	04/00→ 07/03	2	**11.8171-0008.1**	**990049**	ATE
			→	05/97→ 07/03	2	**11.8171-0008.1**	**990049**	ATE
Accessory Kit, parking brake shoes								
520 d 525 d	100 120	02/00→09/03 02/00→05/04		04/00→ 07/03		**03.0137-9700.2**	**669700**	
520 i 523 i	100 120	03/97→08/01 09/98→08/00				**03.0137-9700.2**	**669700**	
520 i 523 i 528 i	110 125 142	03/97→08/01 03/97→08/00 11/96→08/00		05/97→		**03.0137-9700.2**	**669700**	
520 i	120 - 125	09/00→12/03		→ 07/03		**03.0137-9700.2**	**669700**	

	kW				! #			
BMW - 5 Touring (E39) 09/96→06/04								
Accessory Kit, parking brake shoes								
530 d	142	09/00→05/04		→ 07/03		**03.0137-9700.2**	**669700**	
525 i 530 i	141 170	09/00→05/04 09/00→12/03		10/00→ 07/03		**03.0137-9700.2**	**669700**	
525 tds	105	03/97→05/04		06/98→ 09/00		**03.0137-9700.2**	**669700**	
530 d	135	08/98→09/00		09/98→		**03.0137-9700.2**	**669700**	
540 i	210	04/97→12/03		05/97→ 07/03		**03.0137-9700.2**	**669700**	
BMW - 5 Touring (E61) 03/04→12/10								
Guide Bolt, brake caliper								
520 d 525 d 525 d xDrive 525 xd 530 d xDrive 530 i xDrive 530 xd 530 xi	110 - 130 145 145 145 173 200 173 200	09/05→05/10 03/07→05/10 09/08→05/10 09/07→09/08 09/07→05/10 09/08→05/10 03/07→08/07 09/06→05/10			2	**11.8171-0008.1**	**990049**	ATE
			➡		2	**11.8171-0008.1**	**990049**	ATE
520 d 523 i 530 d 530 i 530 xd 530 xi	120 130 170 190 170 190	04/05→05/10 10/04→02/07 02/05→02/07 09/04→02/07 02/05→02/07 04/05→02/07		07/05→	2	**11.8171-0008.1**	**990049**	ATE
			➡	07/05→	2	**11.8171-0008.1**	**990049**	ATE
520 i 525 i xDrive 525 xi	120 - 125 160 160	07/07→12/10 09/08→12/10 07/05→12/10		→ 05/10	2	**11.8171-0008.1**	**990049**	ATE
			➡	→ 05/10	2	**11.8171-0008.1**	**990049**	ATE
523 i	140	01/07→12/10		03/07→ 05/10; Engine Code: N53	2	**11.8171-0008.1**	**990049**	ATE
				03/07→ 05/10; Engine Code: N52N	2	**11.8171-0008.1**	**990049**	ATE
			➡	03/07→ 05/10	2	**11.8171-0008.1**	**990049**	ATE
523 i	140	03/07→01/10		Engine Code: N53	2	**11.8171-0008.1**	**990049**	ATE
				Engine Code: N52N	2	**11.8171-0008.1**	**990049**	ATE
			➡		2	**11.8171-0008.1**	**990049**	ATE
525 d	120	03/04→03/07		12/04→	2	**11.8171-0008.1**	**990049**	ATE
			➡	12/04→	2	**11.8171-0008.1**	**990049**	ATE
525 d 530 d	130 155 - 160	03/04→03/07 03/04→05/10		05/04→	2	**11.8171-0008.1**	**990049**	ATE
			➡	05/04→	2	**11.8171-0008.1**	**990049**	ATE
525 i	141	06/04→12/10		→ 03/05	2	**11.8171-0008.1**	**990049**	ATE
			➡	→ 03/05	2	**11.8171-0008.1**	**990049**	ATE
525 i	155	03/05→05/10		03/07→; Engine Code: N52N	2	**11.8171-0008.1**	**990049**	ATE
				03/07→; Engine Code: N53	2	**11.8171-0008.1**	**990049**	ATE
				→ 03/07	2	**11.8171-0008.1**	**990049**	ATE
			➡	→ 03/07	2	**11.8171-0008.1**	**990049**	ATE
			➡	03/07→; Engine Code: N52N	2	**11.8171-0008.1**	**990049**	ATE
			➡	03/07→; Engine Code: N53	2	**11.8171-0008.1**	**990049**	ATE
525 i	160	03/05→05/10		03/07→; Engine Code: N52N	2	**11.8171-0008.1**	**990049**	ATE
				07/05→ 03/07	2	**11.8171-0008.1**	**990049**	ATE
				03/07→; Engine Code: N53	2	**11.8171-0008.1**	**990049**	ATE
			➡	07/05→ 03/07	2	**11.8171-0008.1**	**990049**	ATE
			➡	03/07→; Engine Code: N52N	2	**11.8171-0008.1**	**990049**	ATE
			➡	03/07→; Engine Code: N53	2	**11.8171-0008.1**	**990049**	ATE
525 i	155 - 160	01/07→12/10		03/07→ 05/10; Engine Code: N53	2	**11.8171-0008.1**	**990049**	ATE
				03/07→ 05/10; Engine Code: N52N	2	**11.8171-0008.1**	**990049**	ATE
				→ 03/07	2	**11.8171-0008.1**	**990049**	ATE
			➡	03/07→ 05/10; Engine Code: N52N	2	**11.8171-0008.1**	**990049**	ATE
			➡	→ 03/07	2	**11.8171-0008.1**	**990049**	ATE
			➡	03/07→ 05/10; Engine Code: N53	2	**11.8171-0008.1**	**990049**	ATE
530 d	173	02/07→05/10		03/07→	2	**11.8171-0008.1**	**990049**	ATE
			➡	03/07→	2	**11.8171-0008.1**	**990049**	ATE
530 i	200	09/06→03/10		03/07→; Engine Code: N52N	2	**11.8171-0008.1**	**990049**	ATE
				03/07→; Engine Code: N53	2	**11.8171-0008.1**	**990049**	ATE
			➡	03/07→; Engine Code: N52N	2	**11.8171-0008.1**	**990049**	ATE
			➡	03/07→; Engine Code: N53	2	**11.8171-0008.1**	**990049**	ATE

© 2022 Continental Aftermarket & Services GmbH

	kW				! #			
BMW - 5 Touring (E61) 03/04→12/10								
Guide Bolt, brake caliper								
530 i	200	01/07→12/10		03/07→ 05/10; Engine Code: N53	2	**11.8171-0008.1**	**990049**	ATE
				03/07→ 05/10; Engine Code: N52N	2	**11.8171-0008.1**	**990049**	ATE
			➡	03/07→ 05/10; Engine Code: N52N	2	**11.8171-0008.1**	**990049**	ATE
			➡	03/07→ 05/10; Engine Code: N53	2	**11.8171-0008.1**	**990049**	ATE
535 d	200	09/04→12/10	➡	→ 03/07	2	**11.8171-0008.1**	**990049**	ATE
535 d	210	01/07→12/10	➡	03/07→ 05/10	2	**11.8171-0008.1**	**990049**	ATE
545 i	245	06/04→12/10		→ 08/05	2	**11.8171-0008.1**	**990049**	ATE
			➡	→ 08/05	2	**11.8171-0008.1**	**990049**	ATE
550 i	270	07/05→12/10		03/07→ 05/10	2	**11.8171-0008.1**	**990049**	ATE
			➡	→ 05/10	2	**11.8171-0008.1**	**990049**	ATE
M5	373	02/07→12/10	➡	→ 05/10	2	**11.8171-0008.1**	**990049**	ATE
Sensor, wheel speed								
520 d 523 i 525 d	110 - 130 140 145	09/05→05/10 03/07→01/10 03/07→05/10	⬅		2	**24.0710-2055.3**	**360576**	L= 680
520 d 523 i 525 i 530 d 530 i	120 130 155 - 160 170 190	04/05→05/10 10/04→02/07 03/05→05/10 02/05→02/07 09/04→02/07	⬅	07/05→	2	**24.0710-2055.3**	**360576**	L= 680
520 i 525 i 550 i	120 - 125 155 - 160 270	07/07→12/10 01/07→12/10 07/05→12/10	⬅	→ 05/10	2	**24.0710-2055.3**	**360576**	L= 680
523 i 530 i 535 d	140 200 210	01/07→12/10 01/07→12/10 01/07→12/10	⬅	03/07→ 05/10	2	**24.0710-2055.3**	**360576**	L= 680
525 d	120	03/04→03/07	⬅	12/04→	2	**24.0710-2055.3**	**360576**	L= 680
525 d 530 d	130 155 - 160	03/04→03/07 03/04→05/10	⬅	05/04→	2	**24.0710-2055.3**	**360576**	L= 680
525 i	141	06/04→12/10	⬅	→ 03/05	2	**24.0710-2055.3**	**360576**	L= 680
530 d 530 i	173 200	02/07→05/10 09/06→03/10	⬅	03/07→	2	**24.0710-2055.3**	**360576**	L= 680
535 d	200	09/04→12/10	⬅	→ 03/07	2	**24.0710-2055.3**	**360576**	L= 680
545 i	245	06/04→12/10	⬅	→ 08/05	2	**24.0710-2055.3**	**360576**	L= 680
BMW - 5 Touring (F11) 11/09→02/17								
Guide Bolt, brake caliper								
518 d 520 d xDrive 520 i 525 d 528 i 528 i xDrive	100 - 120 100 - 147 120 150 180 180	07/13→02/17 07/13→02/17 09/11→02/17 09/10→08/11 09/11→02/17 09/11→02/17			2	**11.8171-0008.1**	**990049**	ATE
520 d 523 i 528 i 530 d	100 - 147 150 190 180	06/10→02/17 11/09→08/11 11/09→08/11 06/10→08/11		09/10→	2	**11.8171-0008.1**	**990049**	ATE
520 d 520 d xDrive 525 d 525 d xDrive 530 d 530 d xDrive	140 - 155 140 - 155 155 - 160 155 - 160 190 190	07/14→02/17 07/14→02/17 09/11→02/17 07/13→02/17 09/11→02/17 03/11→02/17		not for vehicles with reinforced brakes	2	**11.8171-0008.1**	**990049**	ATE
520 i 530 i	135 190 - 200	10/10→02/17 03/10→06/13		09/11→	2	**11.8171-0008.1**	**990049**	ATE
530 d 530 d xDrive	210 210	09/11→02/17 03/11→02/17		10/15→; not for vehicles with reinforced brakes	2	**11.8171-0008.1**	**990049**	ATE

	kW				! #			
BMW - 5 Touring (F11) 11/09→02/17								
Brake Hose								
518 d	100 - 120	07/13→02/17	←		2	**24.5118-0688.3**	**331419**	L= 718
520 d 520 d xDrive 520 i 525 d 525 d xDrive 528 i 528 i xDrive 530 d 530 d xDrive 535 d 535 d xDrive 535 i xDrive 550 i M 550 d xDrive	140 - 155 100 - 155 120 150 - 160 155 - 160 180 180 190 190 220 - 230 230 225 330 280	07/14→02/17 07/13→02/17 09/11→02/17 09/10→02/17 07/13→02/17 09/11→02/17 09/11→02/17 09/11→02/17 03/11→02/17 09/10→02/17 09/11→02/17 09/11→02/17 07/13→02/17 03/12→02/17	→		2	**24.5170-0285.3**	**331554**	L= 285
520 d	100 - 147	06/10→02/17	←	09/10→	2	**24.5118-0688.3**	**331419**	L= 718
523 i 528 i 530 d 535 i	150 190 180 225	11/09→08/11 11/09→08/11 06/10→08/11 06/10→02/17	→	09/10→	2	**24.5170-0285.3**	**331554**	L= 285
520 i	135	10/10→02/17	←	09/11→	2	**24.5118-0688.3**	**331419**	L= 718
530 i 550 i	190 - 200 300	03/10→06/13 09/10→06/13	→	09/11→	2	**24.5170-0285.3**	**331554**	L= 285
530 d	210	09/11→02/17	←	10/15→	2	**24.5118-0688.3**	**331419**	L= 718
530 d xDrive 535 i 535 i xDrive	210 240 240	03/11→02/17 07/13→02/17 07/13→02/17	→	10/15→	2	**24.5170-0285.3**	**331554**	L= 285
BMW - 5 Touring (G31) 03/17→								
Brake Pad Set, disc brake								
518 d Mild-Hybrid 520 d Mild-Hybrid 520 d Mild-Hybrid xDrive 520 i Mild-Hybrid	100 - 110 120 - 140 140 120 - 135	07/20→ 11/19→ 11/19→ 07/20→	←	for vehicles with M-sport brakes		**13.0460-4897.2**	**604897**	BRE + WE / - WK
520 d xDrive	120 - 140	07/17→10/19	←	for vehicles with reinforced brakes		**13.0460-4897.2**	**604897**	BRE + WE / - WK
520 E PLUG-IN-HYBRID	120 - 150	03/21→	←	for vehicles with sports package		**13.0460-4897.2**	**604897**	BRE + WE / - WK
525 d 530 d 530 d xDrive 530 e Plug-in-Hybrid 530 e Plug-in-Hybrid xDrive 530 i 530 i xDrive	155 - 170 195 195 120 120 185 185	07/17→06/19 03/17→06/20 03/17→06/20 11/20→ 11/20→ 03/17→06/20 07/17→06/20	←	for vehicles without sports package		**13.0460-7345.2**	**607345**	ATE + WE / - WK
530 d Mild-Hybrid	183 - 210	07/20→	←	for vehicles with M-sport brakes		**13.0460-4896.2**	**604896**	BRE + WE / - WK
530 d Mild-Hybrid xDrive 540 d Mild-Hybrid xDrive 540 i Mild-Hybrid xDrive	183 - 210 250 245	07/20→ 07/20→ 07/20→	←	for vehicles without M-sport brakes		**13.0460-4897.2**	**604897**	BRE + WE / - WK
530 e Plug-in-Hybrid	135 - 215	11/20→	←	for vehicles with M-sport brakes		**13.0460-4897.2**	**604897**	BRE + WE / - WK
530 e Plug-in-Hybrid xDrive 530 i Mild-Hybrid 530 i Mild-Hybrid xDrive	135 - 215 185 185	11/20→ 07/20→ 07/20→	←	for vehicles without M-sport brakes		**13.0460-7345.2**	**607345**	ATE + WE / - WK
540 d xDrive	235	07/17→06/20	←	for vehicles with sports package		**13.0460-4896.2**	**604896**	BRE + WE / - WK
540 i xDrive M 550 d xDrive	250 - 265 294	03/17→06/20 07/17→	←	for vehicles without sports package		**13.0460-4897.2**	**604897**	BRE + WE / - WK
BMW - 5 Touring Van (G31) 03/17→								
Brake Pad Set, disc brake								
520 d xDrive	140	07/17→06/18	←	for vehicles with reinforced brakes		**13.0460-4897.2**	**604897**	BRE + WE / - WK
530 d 530 d xDrive	195 195	03/17→ 03/17→	←	for vehicles with sports package		**13.0460-4897.2**	**604897**	BRE + WE / - WK

© 2022 Continental Aftermarket & Services GmbH

	kW				! #			
BMW - 5 Touring Van (G31) 03/17→								
Brake Pad Set, disc brake								
530 i 530 i xDrive	185 185	03/17→ 07/17→	←	for vehicles without sports package		**13.0460-7345.2**	**607345**	ATE + WE / - WK
540 d xDrive 540 i xDrive	235 250	07/17→ 03/17→	←	for vehicles with sports package		**13.0460-4896.2**	**604896**	BRE + WE / - WK
			←	for vehicles without sports package		**13.0460-4897.2**	**604897**	BRE + WE / - WK
BMW - 6 (E24) 10/75→04/89								
Guide Bolt, brake caliper								
628 CSi	135	09/79→08/87	←	05/82→ 05/87	2	**11.8171-0008.1**	**990049**	ATE
			→	05/82→ 05/87	2	**11.8171-0008.1**	**990049**	ATE
635 CSi	136 - 162	06/78→04/89	←		2	**11.8171-0008.1**	**990049**	ATE
			→		2	**11.8171-0008.1**	**990049**	ATE
635 CSi	141	12/77→04/89	←	05/82→	2	**11.8171-0008.1**	**990049**	ATE
			→	05/82→	2	**11.8171-0008.1**	**990049**	ATE
M 635 CSi	191 - 210	04/84→02/89	→		2	**11.8171-0008.1**	**990049**	ATE
BMW - 6 (E63) 09/03→12/10								
Guide Bolt, brake caliper								
630 i	190 - 200	09/04→08/10			2	**11.8171-0008.1**	**990049**	ATE
645 Ci	245	09/03→08/05	→		2	**11.8171-0008.1**	**990049**	ATE
635 d	210	07/07→07/10	→	09/07→	2	**11.8171-0008.1**	**990049**	ATE
650 i M	270 373	09/05→08/10 09/05→07/10	→		2	**11.8171-0008.1**	**990049**	ATE
Sensor, wheel speed								
630 i 650 i	190 - 200 270	09/04→08/10 09/05→08/10	←		2	**24.0710-2055.3**	**360576**	L= 680
635 d	210	07/07→07/10	←	09/07→	2	**24.0710-2055.3**	**360576**	L= 680
645 Ci	245	09/03→08/05	←	12/03→	2	**24.0710-2055.3**	**360576**	L= 680
BMW - 6 Convertible (E64) 03/04→12/10								
Guide Bolt, brake caliper								
630 i	190 - 200	09/04→08/10			2	**11.8171-0008.1**	**990049**	ATE
645 Ci	245	04/04→08/05	→		2	**11.8171-0008.1**	**990049**	ATE
635 d	210	07/07→07/10	→	09/07→	2	**11.8171-0008.1**	**990049**	ATE
650 i M6	270 373	09/05→08/10 09/06→08/10	→		2	**11.8171-0008.1**	**990049**	ATE
Sensor, wheel speed								
630 i 645 Ci 650 i	190 - 200 245 270	09/04→08/10 04/04→08/05 09/05→08/10	←		2	**24.0710-2055.3**	**360576**	L= 680
635 d	210	07/07→07/10	←	09/07→	2	**24.0710-2055.3**	**360576**	L= 680
BMW - 6 Convertible (F12) 12/10→06/18								
Brake Hose								
640 d 640 d xDrive 640 i 640 i xDrive 650 i 650 i xDrive	230 230 235 235 298 - 330 300	09/11→06/18 03/12→06/18 09/11→06/18 03/13→06/18 09/11→06/18 09/11→06/12	←		2	**24.5118-0688.3**	**331419**	L= 718
			→		2	**24.5170-0285.3**	**331554**	L= 285
650 i	300	12/10→06/12	←		2	**24.5118-0688.3**	**331419**	L= 718
			→	03/11→	2	**24.5170-0285.3**	**331554**	L= 285
650 i xDrive	330	07/12→06/18	←	09/12→	2	**24.5118-0688.3**	**331419**	L= 718
			→	09/12→	2	**24.5170-0285.3**	**331554**	L= 285
BMW - 6 Coupe (F13) 07/11→10/17								
Brake Hose								
640 d 640 d xDrive 640 i 640 i xDrive	230 230 235 235	09/11→10/17 03/12→10/17 07/11→10/17 03/13→10/17	←		2	**24.5118-0688.3**	**331419**	L= 718
			→		2	**24.5170-0285.3**	**331554**	L= 285

	kW				! #			
BMW - 6 Coupe (F13) 07/11→10/17								
Brake Hose								
650 i	298 - 300	07/11→12/12	←		2	**24.5118-0688.3**	**331419**	L= 718
650 i xDrive	300	09/11→02/15	→		2	**24.5170-0285.3**	**331554**	L= 285
650 i	330	07/12→10/17	←	09/12→	2	**24.5118-0688.3**	**331419**	L= 718
650 i xDrive	330	07/12→10/17	→	09/12→	2	**24.5170-0285.3**	**331554**	L= 285
BMW - 6 Gran Coupe (F06) 03/12→10/18								
Brake Hose								
640 d	230	03/12→10/18	←		2	**24.5118-0688.3**	**331419**	L= 718
640 d xDrive	230	03/13→10/18	→		2	**24.5170-0285.3**	**331554**	L= 285
640 i	235	03/12→10/18						
640 i xDrive	235	03/13→10/18						
650 i	330	07/12→10/18						
650 i xDrive	330	07/12→10/18						
BMW - 6 Gran Turismo (G32) 06/17→								
Brake Pad Set, disc brake								
620 d	120 - 140	07/18→06/20	←			**13.0460-7345.2**	**607345**	ATE + WE / - WK
620 d xDrive	120 - 140	07/18→06/20						
620 d Mild-Hybrid	120 - 140	07/20→	←	for vehicles with M-sport brakes		**13.0460-4896.2**	**604896**	BRE + WE / - WK
620 d Mild-Hybrid xDrive	140	07/20→	←	for vehicles without M-sport brakes		**13.0460-7345.2**	**607345**	ATE + WE / - WK
630 d Mild-Hybrid	155 - 210	07/20→						
630 d Mild-Hybrid xDrive	210	07/20→						
630 d	155 - 195	06/17→06/20	←	for vehicles with sports package		**13.0460-4896.2**	**604896**	BRE + WE / - WK
630 d xDrive	155 - 195	06/17→06/20	←	for vehicles without sports package		**13.0460-4897.2**	**604897**	BRE + WE / - WK
630 i	183 - 190	06/17→06/20						
630 i xDrive	190	07/19→						
640 d xDrive	235	11/17→06/20						
640 i	250 - 265	06/17→06/20						
640 i xDrive	250 - 265	06/17→06/20						
630 i Mild-Hybrid	190	07/20→	←	for vehicles with M-sport brakes		**13.0460-4896.2**	**604896**	BRE + WE / - WK
			←	for vehicles without M-sport brakes		**13.0460-4897.2**	**604897**	BRE + WE / - WK
640 d Mild-Hybrid xDrive	250	07/20→	←			**13.0460-4896.2**	**604896**	BRE + WE / - WK
640 i Mild-Hybrid	245	07/20→						
640 i Mild-Hybrid xDrive	245	07/20→						
BMW - 7 (E23) 05/77→04/88								
Guide Bolt, brake caliper								
728 i	135	09/77→08/86	→	09/81→ 05/86	2	**11.8171-0008.1**	**990049**	ATE
732 i	145	09/79→08/86	→	09/81→ 04/86	2	**11.8171-0008.1**	**990049**	ATE
733 i	145	05/77→08/86	→	09/81→ 07/82	2	**11.8171-0008.1**	**990049**	ATE
			→	09/81→ 04/86	2	**11.8171-0008.1**	**990049**	ATE
735 i	136 - 160	09/82→09/86	→	→ 04/86	2	**11.8171-0008.1**	**990049**	ATE
735 i	160	09/79→09/82	→		2	**11.8171-0008.1**	**990049**	ATE
745 i	185	04/80→04/83	→	09/81→	2	**11.8171-0008.1**	**990049**	ATE
745 i	185	05/83→08/86	→	→ 05/86	2	**11.8171-0008.1**	**990049**	ATE
BMW - 7 (E32) 03/85→10/94								
Guide Bolt, brake caliper								
730 i	138 - 145	03/85→03/94	←	11/87→	2	**11.8171-0008.1**	**990049**	ATE
iL	138 - 145	03/85→03/94	←	→ 10/87	2	**11.8171-0008.1**	**990049**	ATE
			←	12/87→	2	**11.8171-0008.1**	**990049**	ATE
			→	12/87→	2	**11.8171-0008.1**	**990049**	ATE
			→	11/87→	2	**11.8171-0008.1**	**990049**	ATE
			→	→ 10/87	2	**11.8171-0008.1**	**990049**	ATE
730 i	160	04/92→09/94	←	06/92→ 06/94	2	**11.8171-0008.1**	**990049**	ATE
iL V8	160	04/92→09/94	←	→ 06/94	2	**11.8171-0008.1**	**990049**	ATE
			→	06/92→ 06/94	2	**11.8171-0008.1**	**990049**	ATE

© 2022 Continental Aftermarket & Services GmbH

	kW				! #			
BMW - 7 (E32) 03/85→10/94								
Guide Bolt, brake caliper								
730 i iL V8	160 160	04/92→09/94 04/92→09/94	→	→ 06/94	2	**11.8171-0008.1**	**990049**	ATE
iL 735 i 740 i iL V8	155 - 162 155 - 162 210 210	06/86→07/92 06/86→07/92 05/92→03/94 05/92→03/94	← →		2 2	**11.8171-0008.1** **11.8171-0008.1**	**990049** **990049**	ATE ATE
iL V12 750 i	220 220	09/87→09/94 09/87→09/94	← ←	01/90→ 06/94 → 12/89	2 2	**11.8171-0008.1** **11.8171-0008.1**	**990049** **990049**	ATE ATE
			→ →	01/90→ 06/94 → 12/89	2 2	**11.8171-0008.1** **11.8171-0008.1**	**990049** **990049**	ATE ATE
BMW - 7 (E38) 03/94→11/01								
Guide Bolt, brake caliper								
725 tds	105	04/96→11/01	→	05/96→	2	**11.8171-0008.1**	**990049**	ATE
iL 728 i	142 142	08/95→11/01 08/95→11/01	→ →	01/96→ 	2 2	**11.8171-0008.1** **11.8171-0008.1**	**990049** **990049**	ATE ATE
728i X 730 d 730 i iL 735 i	142 142 155 - 160 155 - 175 173 - 175	11/95→09/01 04/00→11/01 03/94→11/01 03/94→11/01 03/96→07/01	→		2	**11.8171-0008.1**	**990049**	ATE
730 d	135	08/98→04/00	→	09/98→	2	**11.8171-0008.1**	**990049**	ATE
740 d 740 i iL 750 i	180 210 210 - 240 240	05/99→11/01 03/94→02/96 03/94→07/01 11/94→07/01	← →		2 2	**11.8171-0008.1** **11.8171-0008.1**	**990049** **990049**	ATE ATE
740 i iL	210 210	02/96→07/01 02/96→07/01	← →	 09/96→	2 2	**11.8171-0008.1** **11.8171-0008.1**	**990049** **990049**	ATE ATE
Accessory Kit, parking brake shoes								
725 tds	105	04/96→11/01		05/96→		**03.0137-9700.2**	**669700**	
iL 728 i	142 142	08/95→11/01 08/95→11/01		 01/96→		**03.0137-9700.2** **03.0137-9700.2**	**669700** **669700**	
728i X 730 d 730 i iL 735 i 740 d 740 i 750 i	142 142 155 - 160 155 - 240 173 - 175 180 210 240	11/95→09/01 04/00→11/01 03/94→11/01 03/94→11/01 03/96→07/01 05/99→11/01 03/94→07/01 11/94→07/01				**03.0137-9700.2**	**669700**	
730 d	135	08/98→04/00		09/98→		**03.0137-9700.2**	**669700**	
BMW - 7 (E65, E66, E67) 07/01→12/09								
Guide Bolt, brake caliper								
730 d 730 i Li 735 i 745 d	150 170 170 - 200 200 220 - 242	09/02→08/03 03/03→07/08 11/01→07/08 11/01→02/05 03/05→07/08	→		2	**11.8171-0008.1**	**990049**	ATE
730 d	155	09/03→08/08	→	→ 02/05	2	**11.8171-0008.1**	**990049**	ATE
730 d	160	06/02→02/05	→	09/02→	2	**11.8171-0008.1**	**990049**	ATE
730 i Li	184 - 190 184 - 190	03/05→08/08 03/05→08/08	→	07/05→	2	**11.8171-0008.1**	**990049**	ATE
730 Ld 735 i 740 d 740 i Li	170 225 190 225 225 - 270	07/05→08/08 03/05→12/09 10/02→02/05 03/05→08/08 07/01→08/08	 →		2 2	**11.8171-0008.1** **11.8171-0008.1**	**990049** **990049**	ATE ATE

	kW				! #			
BMW - 7 (E65, E66, E67) 07/01→12/09								
Guide Bolt, brake caliper								
745 i 750 i	245 270	07/01→03/05 03/05→08/08			2 2	**11.8171-0008.1** **11.8171-0008.1**	**990049** **990049**	ATE ATE
760 i Li	320 - 327 327	01/03→08/08 01/03→08/08		03/03→ 03/03→	2 2	**11.8171-0008.1** **11.8171-0008.1**	**990049** **990049**	ATE ATE
BMW - 7 (F01, F02, F03, F04) 02/08→12/15								
Guide Bolt, brake caliper								
730 d	155	02/08→05/15		09/08→	2	**11.8171-0008.1**	**990049**	ATE
730 d 730 i Li 740 d 740 d xDrive 740 i Li xDrive 750 d xDrive 750 i 760 i ActiveHybrid 7	180 - 190 190 190 - 400 225 - 230 225 - 230 224 - 240 235 - 330 280 300 - 331 400 235 - 342	09/08→05/15 09/09→06/15 09/08→12/15 09/09→06/15 09/10→06/15 09/08→12/15 09/09→12/15 07/12→12/15 09/09→06/15 09/09→12/15 04/10→06/15			2	**11.8171-0008.1**	**990049**	ATE
730 d xDrive	155 - 190	11/11→05/15		06/12→	2	**11.8171-0008.1**	**990049**	ATE
750 i Li	300 300	09/08→06/12 09/08→06/12		12/08→ → 11/08	2 2	**11.8171-0008.1** **11.8171-0008.1**	**990049** **990049**	ATE ATE
Brake Hose								
730 d	155	02/08→05/15		09/08→	2	**24.5118-0688.3**	**331419**	L= 718
730 d 730 i Li 740 d 740 d xDrive 740 i Li xDrive 750 d xDrive 750 i 760 i ActiveHybrid 7	180 - 190 190 190 - 400 225 - 230 225 - 230 224 - 240 235 - 330 280 300 - 331 400 235 - 342	09/08→05/15 09/09→06/15 09/08→12/15 09/09→06/15 09/10→06/15 09/08→12/15 09/09→12/15 07/12→12/15 09/08→06/15 09/09→12/15 04/10→06/15			2	**24.5118-0688.3**	**331419**	L= 718
730 d xDrive	155 - 190	11/11→05/15		06/12→	2	**24.5118-0688.3**	**331419**	L= 718
BMW - 7 (G11, G12) 07/15→								
Brake Pad Set, disc brake								
725 d Ld 730 i Li	155 - 170 155 - 170 183 - 190 190	07/16→02/19 07/16→02/19 11/15→ 11/15→02/19		+ Performance Parts - Performance Parts		**13.0460-4896.2** **13.0460-7345.2**	**604896** **607345**	BRE + WE / - WK ATE + WE / - WK
730 d Ld xDrive 730 d xDrive 740 d 740 i Li 740 Li xDrive	155 - 195 183 - 235 155 235 240 240 240	07/15→06/20 09/15→06/20 09/15→06/20 11/15→06/20 07/15→02/19 07/15→02/19 03/16→02/19				**13.0460-4897.2**	**604897**	BRE + WE / - WK
730 d Ld Mild-Hybrid	183 - 210 210	07/20→ 07/20→		for vehicles with M-sport brakes for vehicles without M-sport brakes		**13.0460-4896.2** **13.0460-4897.2**	**604896** **604897**	BRE + WE / - WK BRE + WE / - WK

© 2022 Continental Aftermarket & Services GmbH

	kW				! #			
BMW - 7 (G11, G12) 07/15→								
Brake Pad Set, disc brake								
Ld Mild-Hybrid xDrive	183 - 250	07/20→	←	for vehicles with M-sport brakes		**13.0460-4896.2**	**604896**	BRE + WE / - WK
730 d Mild-Hybrid xDrive 730 i Li 740 d 740 i 740 Li xDrive	155 195 195 - 250 250 250 250	07/20→ 03/19→ 03/19→ 07/20→ 03/19→ 03/19→	←	for vehicles without M-sport brakes		**13.0460-4897.2**	**604897**	BRE + WE / - WK
740 e	190 - 240	07/16→02/19	←	+ Performance Parts		**13.0460-4896.2**	**604896**	BRE + WE / - WK
Le 740 Le xDrive 750 d Ld xDrive	190 - 240 190 - 240 294 294	07/16→02/19 07/16→02/19 07/16→ 07/16→	←	- Performance Parts		**13.0460-4897.2**	**604897**	BRE + WE / - WK
745 e	210 - 290	03/19→	←			**13.0460-4896.2**	**604896**	BRE + WE / - WK
Le Plug-in-Hybrid 745 Le Plug-in-Hybrid xDrive 750 i Li Li xDrive 750 Li xDrive M 760 i M 760 Li xDrive	210 - 290 210 - 290 330 - 390 330 330 - 448 330 448 430	03/19→ 03/19→ 09/15→ 11/15→02/19 09/15→ 03/16→ 12/16→02/19 03/19→						
BMW - 8 (E31) 01/90→12/99								
Guide Bolt, brake caliper								
840 Ci	210	03/96→06/99	→		2	**11.8171-0008.1**	**990049**	ATE
840 i 850 i Ci	210 220 220	03/93→02/96 01/90→08/94 01/90→08/94	← →	→ 02/94 	2 2	**11.8171-0008.1** **11.8171-0008.1**	**990049** **990049**	ATE ATE
850 Ci	240	09/94→12/99	← →	 	2 2	**11.8171-0008.1** **11.8171-0008.1**	**990049** **990049**	ATE ATE
BMW - 8 Convertible (G14, F91) 11/18→								
Brake Pad Set, disc brake								
840 d Mild-Hybrid xDrive 840 d xDrive	250 235	11/20→ 11/18→10/20	←	for vehicles without sports package; for vehicles with sports brake system		**13.0460-4896.2**	**604896**	BRE + WE / - WK
			←	for vehicles with sports package; for vehicles without sports brake system		**13.0460-4897.2**	**604897**	BRE + WE / - WK
840 i 840 i xDrive	245 - 250 245 - 250	07/19→ 07/19→	←	for vehicles with aerodynamic pack; for vehicles without M-sport brakes		**13.0460-4896.2**	**604896**	BRE + WE / - WK
			←	for vehicles without aerodynamic pack; for vehicles without M-sport brakes		**13.0460-4897.2**	**604897**	BRE + WE / - WK
M 850 i xDrive	390	11/18→	←			**13.0460-4896.2**	**604896**	BRE + WE / - WK
BMW - 8 Coupe (G15, F92) 07/18→								
Brake Pad Set, disc brake								
840 d Mild-Hybrid xDrive 840 d xDrive	250 235	11/20→ 07/18→10/20	←	for vehicles without sports package; for vehicles with sports brake system		**13.0460-4896.2**	**604896**	BRE + WE / - WK
			←	for vehicles with sports package; for vehicles without sports brake system		**13.0460-4897.2**	**604897**	BRE + WE / - WK
840 i 840 i xDrive	245 - 250 245 - 250	07/19→ 07/19→	←	for vehicles with aerodynamic pack; for vehicles without M-sport brakes		**13.0460-4896.2**	**604896**	BRE + WE / - WK
			←	for vehicles without aerodynamic pack; for vehicles without M-sport brakes		**13.0460-4897.2**	**604897**	BRE + WE / - WK
M 850 i xDrive	390	10/18→	←			**13.0460-4896.2**	**604896**	BRE + WE / - WK
BMW - 8 Gran Coupe (G16, F93) 07/19→								
Brake Pad Set, disc brake								
840 d Mild-Hybrid xDrive 840 d xDrive	250 235	11/20→ 07/19→10/20	←	for vehicles without sports package; for vehicles with sports brake system		**13.0460-4896.2**	**604896**	BRE + WE / - WK
			←	for vehicles with sports package; for vehicles without sports brake system		**13.0460-4897.2**	**604897**	BRE + WE / - WK
840 i 840 i xDrive	245 - 250 245 - 250	07/19→ 07/19→	←	for vehicles with aerodynamic pack; for vehicles without M-sport brakes		**13.0460-4896.2**	**604896**	BRE + WE / - WK

	kW				! #			
BMW - 8 Gran Coupe (G16, F93) 07/19→								
Brake Pad Set, disc brake								
840 i	245 - 250	07/19→	←	for vehicles without aerodynamic pack; for vehicles without M-sport brakes		**13.0460-4897.2**	**604897**	BRE + WE / - WK
840 i xDrive	245 - 250	07/19→						
M 850 i xDrive	390	07/19→	←			**13.0460-4896.2**	**604896**	BRE + WE / - WK
BMW - i4 (G26) 11/21→								
Brake Pad Set, disc brake								
eDrive40	250	11/21→	←	for vehicles with M-sport brakes		**13.0460-4897.2**	**604897**	BRE + WE / - WK
			←	for vehicles without M-sport brakes		**13.0460-7345.2**	**607345**	ATE + WE / - WK
			→	for vehicles with M-sport brakes		**13.0460-5523.2**	**605523**	+ WE / - WK + Zub
M50 All-wheel Drive	400	11/21→	←	for vehicles with M-technology		**13.0460-4896.2**	**604896**	BRE + WE / - WK
			←	for vehicles without M-technology		**13.0460-4897.2**	**604897**	BRE + WE / - WK
			→			**13.0460-5523.2**	**605523**	+ WE / - WK + Zub
Warning Contact, brake pad wear								
eDrive40	250	11/21→	←		1	**24.8190-0808.2**	**620808**	
			→		2	**24.8190-0810.2**	**620810**	
M50 All-wheel Drive	400	11/21→	←		1	**24.8190-0808.2**	**620808**	
			→		1	**24.8190-0810.2**	**620810**	
BMW - iX (I20) 07/21→								
Brake Pad Set, disc brake								
xDrive40	240	07/21→	←			**13.0460-4897.2**	**604897**	BRE + WE / - WK
xDrive50	385	07/21→						
BMW - iX3 (G08) 09/20→								
Brake Pad Set, disc brake								
Electric	80 - 210	09/20→	←			**13.0460-7345.2**	**607345**	ATE + WE / - WK
BMW - X1 (E84) 03/09→06/15								
Guide Bolt, brake caliper								
sDrive 16 d	85	04/12→06/15		07/12→	2	**11.8171-0008.1**	**990049**	ATE
xDrive 25 d	160	10/09→06/15						
sDrive 16 i	105	03/13→06/15			2	**11.8171-0008.1**	**990049**	ATE
sDrive 18 d	105	12/09→06/15						
sDrive 18 i	100 - 110	03/10→06/15						
sDrive 20 d	120 - 135	10/09→06/15						
sDrive 20 i	135	09/11→06/15						
sDrive 28 i	180	09/12→06/15						
xDrive 18 d	105	10/09→06/15						
xDrive 20 d	120 - 135	09/09→06/15						
xDrive 20 i	135	09/11→06/15						
xDrive 25 i	160	03/10→08/11						
xDrive 28 i	194	03/10→06/11						
sDrive 18 d	100	03/09→06/15		10/09→	2	**11.8171-0008.1**	**990049**	ATE
xDrive 18 d	100	03/09→06/15						
xDrive 23 d	150	10/09→06/15		→ 02/12	2	**11.8171-0008.1**	**990049**	ATE
xDrive 28 i	180	03/11→06/15		03/12→	2	**11.8171-0008.1**	**990049**	ATE
xDrive 28 i Flex	180	04/11→06/15						
xDrive 35 i	225	03/11→06/15			2	**11.8171-0008.1**	**990049**	ATE
xDrive 28 i	190	09/09→08/11			2	**11.8171-0008.1**	**990049**	ATE
			→		2	**11.8171-0008.1**	**990049**	ATE
Accessory Kit, parking brake shoes								
sDrive 16 d	85	04/12→06/15		07/12→		**03.0137-9700.2**	**669700**	
xDrive 25 d	160	10/09→06/15						
sDrive 16 i	105	03/13→06/15				**03.0137-9700.2**	**669700**	
sDrive 18 d	105	12/09→06/15						
sDrive 18 i	100 - 110	03/10→06/15						
sDrive 20 d	120 - 135	10/09→06/15						
sDrive 20 i	135	09/11→06/15						
sDrive 28 i	180	09/12→06/15						
xDrive 18 d	105	10/09→06/15						

© 2022 Continental Aftermarket & Services GmbH

	kW				! #			
BMW - X1 (E84) 03/09→06/15								
Accessory Kit, parking brake shoes								
xDrive 20 d	120 - 135	09/09→06/15				**03.0137-9700.2**	**669700**	
xDrive 20 i	135	09/11→06/15						
xDrive 23 d	150	10/09→06/15						
xDrive 25 i	160	03/10→08/11						
xDrive 28 i	180 - 194	09/09→06/15						
xDrive 28 i Flex	180	04/11→06/15						
xDrive 35 i	225	03/11→06/15						
sDrive 18 d	100	03/09→06/15		10/09→		**03.0137-9700.2**	**669700**	
xDrive 18 d	100	03/09→06/15						
BMW - X2 (F39) 11/17→								
Brake Caliper								
sDrive 16 d	85	11/18→	←	for vehicles without M-sport brakes;		**24.3541-1862.5**	**241278**	TRW without holder
BMW - X3 (E83) 01/03→12/11								
Guide Bolt, brake caliper								
2.0 d	110	09/04→08/07	←		2	**11.8171-0008.1**	**990049**	ATE
2.0 i	110	07/05→08/08						
2.0 sd	130	09/07→08/08	→		2	**11.8171-0008.1**	**990049**	ATE
2.5 i	141	03/04→07/06						
2.5 si	160	08/06→08/08						
2.5 si xDrive	155	08/06→08/08						
3.0 d	150 - 160	01/04→08/08						
3.0 i xDrive	170	09/03→07/06						
3.0 sd	210	09/06→08/08						
3.0 si	194 - 200	08/06→08/08						
xDrive 20 d	120 - 130	09/08→08/10						
xDrive 25 i	155 - 160	09/08→08/10						
xDrive 30 d	155 - 160	09/08→08/10						
xDrive 30 i	194 - 200	09/08→08/10						
xDrive 18 d	100 - 105	09/08→12/11	←	→ 08/10	2	**11.8171-0008.1**	**990049**	ATE
xDrive 20 i	110	09/08→08/11	→	→ 08/10	2	**11.8171-0008.1**	**990049**	ATE
xDrive 35 d	210	09/08→08/11						
xDrive 30 i	160	08/06→08/10	←		2	**11.8171-0008.1**	**990049**	ATE
BMW - X3 (G01, F97) 07/17→								
Brake Pad Set, disc brake								
sDrive 18 d	100 - 110	04/18→06/20	←	for vehicles with sports package		**13.0460-4897.2**	**604897**	BRE + WE / - WK
sDrive 20 i	135	12/17→						
sDrive 20 i 1.6	125	12/17→						
xDrive 20 d	140	08/17→03/20						
xDrive 30 i	183 - 185	08/17→						
sDrive 18 d Mild-Hybrid	100 - 110	07/20→	←	for vehicles with M-sport brakes		**13.0460-4897.2**	**604897**	BRE + WE / - WK
xDrive 20 d Mild-Hybrid	120 - 140	04/20→						
xDrive 20 d	120	08/17→03/20	←	10/17→; for vehicles with sports package		**13.0460-4897.2**	**604897**	BRE + WE / - WK
xDrive 20 i	135	12/17→	←	03/18→; for vehicles with sports package		**13.0460-4897.2**	**604897**	BRE + WE / - WK
xDrive 20 i Mild Hybrid	135	08/21→	←	for vehicles with M-sport brakes		**13.0460-4897.2**	**604897**	BRE + WE / - WK
xDrive 30d Mild-Hybrid	183 - 210	07/20→	←	for vehicles without sports package		**13.0460-7345.2**	**607345**	ATE + WE / - WK
xDrive 30 i Mild Hybrid	180	08/21→						
xDrive 25 d	155 - 170	04/18→	←	for vehicles with sports package		**13.0460-4897.2**	**604897**	BRE + WE / - WK
xDrive 30d	183 - 195	08/17→06/20	←	for vehicles without sports package		**13.0460-7345.2**	**607345**	ATE + WE / - WK
xDrive 30 e Plug-in-Hybrid	120 - 185	12/19→	←	for vehicles with M-sport brakes		**13.0460-4897.2**	**604897**	BRE + WE / - WK
			←	for vehicles without M-sport brakes		**13.0460-7345.2**	**607345**	ATE + WE / - WK
xDrive M40 d	240	08/18→06/20	←			**13.0460-4897.2**	**604897**	BRE + WE / - WK
xDrive M40 d Mild-Hybrid	250	08/18→						
xDrive M40 i	260 - 285	08/17→						

	kW				! #			
BMW - X3 Van (G01) 07/17→								
Brake Pad Set, disc brake								
sDrive 18 d xDrive 20 d xDrive 20 i xDrive 30 i	110 140 135 185	04/18→ 08/17→ 12/17→ 08/17→	←	for vehicles with sports package		**13.0460-4897.2**	**604897**	BRE + WE / - WK
xDrive 30 d	195	08/17→	←	for vehicles with sports package		**13.0460-4897.2**	**604897**	BRE + WE / - WK
			←	for vehicles without sports package		**13.0460-7345.2**	**607345**	ATE + WE / - WK
xDrive M40 i	265 - 285	08/17→	←			**13.0460-4897.2**	**604897**	BRE + WE / - WK
BMW - X4 (G02, F98) 04/18→								
Brake Pad Set, disc brake								
M40 d Mild-Hybrid xDrive M40 d xDrive M40 i xDrive	250 240 260 - 285	07/20→ 04/18→06/20 04/18→	←			**13.0460-4897.2**	**604897**	BRE + WE / - WK
xDrive 20 d xDrive 20 d xDrive xDrive 20 i xDrive 30 i	140 120 135 183 - 185	04/18→03/20 04/18→03/20 04/18→ 04/18→	←	for vehicles with sports package		**13.0460-4897.2**	**604897**	BRE + WE / - WK
xDrive 20 d Mild-Hybrid	120 - 140	04/20→	←	for vehicles with M-sport brakes		**13.0460-4897.2**	**604897**	BRE + WE / - WK
xDrive 25 d	155 - 170	04/18→	←	for vehicles with sports package		**13.0460-4897.2**	**604897**	BRE + WE / - WK
xDrive 30 d	183 - 195	04/18→06/20	←	for vehicles without sports package		**13.0460-7345.2**	**607345**	ATE + WE / - WK
xDrive 30 d Mild-Hybrid	183 - 210	07/20→	←	for vehicles with M-sport brakes		**13.0460-4897.2**	**604897**	BRE + WE / - WK
			←	for vehicles without sports package		**13.0460-7345.2**	**607345**	ATE + WE / - WK
BMW - X5 (E53) 01/00→12/06								
Guide Bolt, brake caliper								
3.0 d 4.4 i	135 210	04/01→09/03 01/00→09/03	←		2	**11.8171-0008.1**	**990049**	ATE
			→		2	**11.8171-0008.1**	**990049**	ATE
3.0 d	155 - 160	10/03→09/06	←	11/05→	2	**11.8171-0008.1**	**990049**	ATE
3.0 i	170	04/00→10/06	←	→ 10/05	2	**11.8171-0008.1**	**990049**	ATE
			→		2	**11.8171-0008.1**	**990049**	ATE
4.4 i	235	10/03→10/06	←	→ 10/05; not for special-purpose vehicles	2	**11.8171-0008.1**	**990049**	ATE
			←	11/05→; not for special-purpose vehicles	2	**11.8171-0008.1**	**990049**	ATE
			→		2	**11.8171-0008.1**	**990049**	ATE
4.6 is 4.8 is	255 265	10/01→09/03 04/04→09/06	→		2	**11.8171-0008.1**	**990049**	ATE
BMW - X5 (E70) 02/06→07/13								
Guide Bolt, brake caliper								
3.0 3.0d 3.0 d 3.0 sd 3.0 si 4.8 i xDrive xDrive 30 d xDrive 30 i xDrive 35 d xDrive 35 i xDrive 40 d xDrive 40 i xDrive 48 i xDrive 50 i	155 173 210 200 261 155 - 173 172 - 200 210 225 - 235 225 225 261 300	02/07→09/08 12/06→09/08 10/07→09/08 10/06→09/08 10/06→09/08 10/08→07/13 02/07→12/12 10/08→07/13 04/10→07/13 09/10→06/13 01/12→06/13 10/08→03/10 04/10→07/13			2	**11.8171-0008.1**	**990049**	ATE
M 50 d	280	08/11→06/13		06/12→	2	**11.8171-0008.1**	**990049**	ATE
xDrive 30 d	180	04/10→07/13		09/10→	2	**11.8171-0008.1**	**990049**	ATE
BMW - X5 (F15, F85) 08/13→07/18								
Guide Bolt, brake caliper								
M 50 d sDrive 25 d sDrive 35 i	280 155 - 170 225	12/13→07/18 12/13→07/18 08/13→07/18			2	**11.8171-0008.1**	**990049**	ATE

© 2022 Continental Aftermarket & Services GmbH

	kW				! #			
BMW - X5 (F15, F85) 08/13→07/18								
Guide Bolt, brake caliper								
xDrive 25 d	155 - 170	12/13→07/18			2	**11.8171-0008.1**	**990049**	ATE
xDrive 28 i	180	06/15→07/18						
xDrive 30 d	183 - 210	08/13→07/18						
xDrive 35 i	225 - 240	12/13→07/18						
xDrive 40 d	230	12/13→07/18						
xDrive 40e	155 - 230	08/15→07/18						
xDrive 50 i	330	08/13→07/18						
Accessory Kit, parking brake shoes								
M	423	12/14→07/18				**03.0137-9700.2**	**669700**	
M 50 d	280	12/13→07/18						
sDrive 25 d	155 - 170	12/13→07/18						
sDrive 35 i	225	08/13→07/18						
xDrive 25 d	155 - 170	12/13→07/18						
xDrive 28 i	180	06/15→07/18						
xDrive 30 d	183 - 210	08/13→07/18						
xDrive 35 i	225 - 240	12/13→07/18						
xDrive 40 d	230	12/13→07/18						
xDrive 40e	155 - 230	08/15→07/18						
xDrive 50 i	330	08/13→07/18						
BMW - X5 (G05, F95) 08/18→								
Brake Pad Set, disc brake								
M M50 i xDrive M Competition xDrive 50 i xDrive M 50 d	441 390 460 340 294	12/19→ 08/19→ 12/19→ 08/18→ 08/18→				**13.0460-4896.2**	**604896**	BRE + WE / - WK
xDrive 25 d	155 - 170	08/19→		for vehicles with M-sport brakes		**13.0460-4896.2**	**604896**	BRE + WE / - WK
				for vehicles without M-sport brakes		**13.0460-7345.2**	**607345**	ATE + WE / - WK
xDrive 30 d	183 - 195	08/18→07/20		for vehicles with sports package		**13.0460-4896.2**	**604896**	BRE + WE / - WK
				for vehicles without sports package		**13.0460-4897.2**	**604897**	BRE + WE / - WK
xDrive 30 d Mild-Hybrid	183 - 210	08/20→		for vehicles without M-sport brakes; for vehicles with towbar; for right-hand drive vehicles		**13.0460-4896.2**	**604896**	BRE + WE / - WK
				for vehicles with M-sport brakes		**13.0460-4896.2**	**604896**	BRE + WE / - WK
				for vehicles without M-sport brakes; for vehicles with 3rd seating row		**13.0460-4897.2**	**604897**	BRE + WE / - WK
				for vehicles without M-sport brakes; for vehicles without 3rd seating row		**13.0460-7345.2**	**607345**	ATE + WE / - WK
xDrive 40 d Mild-Hybrid	250	05/20→		for vehicles without M-sport brakes		**13.0460-4896.2**	**604896**	BRE + WE / - WK
xDrive 40 i	250	08/18→		for vehicles with sports package		**13.0460-4896.2**	**604896**	BRE + WE / - WK
xDrive 45 e Plug-in-Hybrid	155 - 290	06/19→		for vehicles without sports package		**13.0460-7345.2**	**607345**	ATE + WE / - WK
xDrive 40 i Mild-Hybrid	245	12/20→		for vehicles with M-sport brakes		**13.0460-4896.2**	**604896**	BRE + WE / - WK
				for vehicles without M-sport brakes		**13.0460-4897.2**	**604897**	BRE + WE / - WK
BMW - X5 Van (G05) 11/19→								
Brake Pad Set, disc brake								
xDrive 30 d	195	11/19→		for vehicles with sports package		**13.0460-4896.2**	**604896**	BRE + WE / - WK
				for vehicles without sports package		**13.0460-4897.2**	**604897**	BRE + WE / - WK
xDrive 40 i	250	11/19→		for vehicles with sports package		**13.0460-4896.2**	**604896**	BRE + WE / - WK
				for vehicles without sports package		**13.0460-7345.2**	**607345**	ATE + WE / - WK
BMW - X6 (E71, E72) 06/07→07/14								
Guide Bolt, brake caliper								
ActiveHybrid ActiveHybrid xDrive xDrive 40 d	357 300 225	01/09→10/11 01/09→10/11 07/09→06/14		10/10→	2	**11.8171-0008.1**	**990049**	ATE
M 50 d	280	08/11→06/14		06/12→	2	**11.8171-0008.1**	**990049**	ATE
xDrive 30 d	155	04/10→07/14			2	**11.8171-0008.1**	**990049**	ATE
xDrive 30 d	173	04/08→03/10		11/08→	2	**11.8171-0008.1**	**990049**	ATE
				09/08→	2	**11.8171-0008.1**	**990049**	ATE

	kW				! #			
BMW - X6 (E71, E72) 06/07→07/14								
Guide Bolt, brake caliper								
xDrive 30 d	180	04/10→07/14		09/10→	2	**11.8171-0008.1**	**990049**	ATE
xDrive 35 d xDrive 35 i	210 224 - 240	01/08→03/10 06/07→07/14		09/08→ 09/09	2	**11.8171-0008.1**	**990049**	ATE
				11/08→	2	**11.8171-0008.1**	**990049**	ATE
				10/09→	2	**11.8171-0008.1**	**990049**	ATE
xDrive 35 i	235	07/09→06/14		→ 09/09	2	**11.8171-0008.1**	**990049**	ATE
				10/09→	2	**11.8171-0008.1**	**990049**	ATE
					2	**11.8171-0008.1**	**990049**	ATE
xDrive 50 i	300 - 330	10/07→07/14		09/08→ 09/09	2	**11.8171-0008.1**	**990049**	ATE
				10/09→	2	**11.8171-0008.1**	**990049**	ATE
BMW - X6 (F16, F86) 08/14→07/19								
Accessory Kit, parking brake shoes								
M M 50 d xDrive 28 i xDrive 30 d xDrive 35 i xDrive 40 d xDrive 50 i	423 280 180 155 - 204 225 - 240 230 330	12/14→07/19 08/14→07/19 06/15→07/19 08/14→07/19 08/14→07/19 12/14→07/19 08/14→07/19				**03.0137-9700.2**	**669700**	
BMW - X6 (G06, F96) 08/19→								
Brake Pad Set, disc brake								
M M50 i xDrive M Competition xDrive M 50 d	441 390 460 294	12/19→ 08/19→ 12/19→ 08/19→	←			**13.0460-4896.2**	**604896**	BRE + WE / - WK
xDrive 30 d	155 - 195	08/19→07/20	←	for vehicles with M-sport brakes		**13.0460-4896.2**	**604896**	BRE + WE / - WK
xDrive 30 d Mild-Hybrid	155 - 210	08/20→	←	for vehicles without M-sport brakes		**13.0460-7345.2**	**607345**	ATE + WE / - WK
xDrive 40 d Mild-Hybrid	250	05/20→	←	08/20→		**13.0460-4896.2**	**604896**	BRE + WE / - WK
xDrive 40 i xDrive 40 i Mild-Hybrid	250 245	08/19→ 12/20→	←	for vehicles with M-sport brakes		**13.0460-4896.2**	**604896**	BRE + WE / - WK
			←	for vehicles without M-sport brakes		**13.0460-4897.2**	**604897**	BRE + WE / - WK
BMW - X7 (G07) 03/19→								
Brake Pad Set, disc brake								
xDrive 30 d	155 - 195	03/19→	←	for vehicles with towbar; for vehicles with M-sport brakes		**13.0460-4896.2**	**604896**	BRE + WE / - WK
xDrive 40 i	250	03/19→	←	for vehicles without towbar; for vehicles without M-sport brakes		**13.0460-4897.2**	**604897**	BRE + WE / - WK
xDrive 40 d Mild-Hybrid	155 - 250	03/19→	←	08/20→		**13.0460-4896.2**	**604896**	BRE + WE / - WK
xDrive 40 i Mild-Hybrid xDrive M 50 d xDrive M 50 i	245 294 390	12/20→ 03/19→ 07/19→	←			**13.0460-4896.2**	**604896**	BRE + WE / - WK
BMW - Z1 Roadster 06/88→06/91								
Guide Bolt, brake caliper								
2.5	125	06/88→06/91	←	07/88→	2	**11.8171-0008.1**	**990049**	ATE
			→	07/88→ 08/90	2	**11.8171-0008.1**	**990049**	ATE
			→	09/90→	2	**11.8171-0008.1**	**990049**	ATE
BMW - Z3 Coupe (E36) 04/97→06/03								
Guide Bolt, brake caliper								
2.8 i M M 3.2	142 236 176	01/98→05/00 02/98→06/01 02/98→06/00	←		2	**11.8171-0008.1**	**990049**	ATE
			→		2	**11.8171-0008.1**	**990049**	ATE
3.0 i M	170 239	06/00→06/03 06/01→06/03	←	→ 12/02	2	**11.8171-0008.1**	**990049**	ATE
			→	→ 12/02	2	**11.8171-0008.1**	**990049**	ATE
BMW - Z3 Roadster (E36) 10/95→01/03								
Guide Bolt, brake caliper								
1.8 i 1.9 i 2.2 i 2.5 i 2.8 i	85 103 125 141 142	10/95→10/98 11/95→03/99 10/00→06/02 10/00→08/02 11/96→05/00	←		2	**11.8171-0008.1**	**990049**	ATE
			→		2	**11.8171-0008.1**	**990049**	ATE

© 2022 Continental Aftermarket & Services GmbH

	kW				! #			
BMW - Z3 Roadster (E36) 10/95→01/03								
Guide Bolt, brake caliper								
M 3.2	179 - 236	01/97→06/00	←		2	**11.8171-0008.1**	**990049**	ATE
			→		2	**11.8171-0008.1**	**990049**	ATE
1.9 i	85 - 87	07/98→01/03	←	→ 12/02	2	**11.8171-0008.1**	**990049**	ATE
3.0 i M 3.2	170 239	06/00→01/03 06/01→01/03	→	→ 12/02	2	**11.8171-0008.1**	**990049**	ATE
2.0 i	110	04/99→01/03	←	→ 08/00	2	**11.8171-0008.1**	**990049**	ATE
			→	→ 08/00	2	**11.8171-0008.1**	**990049**	ATE
2.2 i	120	08/00→01/03	←	10/00→ 12/02	2	**11.8171-0008.1**	**990049**	ATE
			→	10/00→ 12/02	2	**11.8171-0008.1**	**990049**	ATE
2.8 i	143	01/96→07/00	←	05/97→ 06/00	2	**11.8171-0008.1**	**990049**	ATE
			→	05/97→ 06/00	2	**11.8171-0008.1**	**990049**	ATE
BMW - Z4 Coupe (E86) 03/06→01/09								
Guide Bolt, brake caliper								
3.0 si	195	04/06→08/08	←		2	**11.8171-0008.1**	**990049**	ATE
M	252	04/06→08/08	→		2	**11.8171-0008.1**	**990049**	ATE
BMW - Z4 Roadster (E85) 09/02→12/09								
Guide Bolt, brake caliper								
2.0 i	110	03/05→02/09	←	04/05→ 12/08	2	**11.8171-0008.1**	**990049**	ATE
			→	04/05→ 12/08	2	**11.8171-0008.1**	**990049**	ATE
2.2 i 2.5 i 2.5 si 3.0 i 3.0 si M	125 141 160 170 195 252	10/03→10/05 12/02→12/05 01/06→08/08 12/02→12/05 01/06→08/08 01/06→08/08	←		2	**11.8171-0008.1**	**990049**	ATE
			→		2	**11.8171-0008.1**	**990049**	ATE
2.5 i 2.5 si	130 155	09/05→02/09 09/05→02/09	←	01/06→ 12/08	2	**11.8171-0008.1**	**990049**	ATE
			→	01/06→ 12/08	2	**11.8171-0008.1**	**990049**	ATE
BMW - Z4 Roadster (E89) 02/09→08/16								
Guide Bolt, brake caliper								
sDrive 18 i sDrive 20 i sDrive 23 i sDrive 28 i sDrive 30 i sDrive 35 i sDrive 35 is	115 120 - 135 150 180 190 - 195 224 - 225 250	04/13→08/16 09/11→08/16 03/09→08/11 09/11→08/16 02/09→08/11 02/09→08/16 03/10→08/16			2	**11.8171-0008.1**	**990049**	ATE
BMW - Z4 Roadster (G29) 11/18→								
Brake Pad Set, disc brake								
M40 i	250	11/18→	←			**13.0460-4897.2**	**604897**	BRE + WE / - WK
			→			**13.0460-5523.2**	**605523**	+ WE / - WK + Zub
sDrive 20 i	120 - 145	11/18→	←	for vehicles with M-sport brakes		**13.0460-4897.2**	**604897**	BRE + WE / - WK
sDrive 30 i	190	11/18→	→	for vehicles with M-sport brakes		**13.0460-5523.2** **13.0470-5523.2**	**605523** **LD5523**	+ WE / - WK + Zub + WE / - WK + Zub Ceramic
Warning Contact, brake pad wear								
M40 i sDrive 20 i sDrive 30 i	250 120 - 145 190	11/18→ 11/18→ 11/18→	→		1	**24.8190-0810.2**	**620810**	
BMW - Z8 Roadster (E52) 01/00→12/03								
Guide Bolt, brake caliper								
4.9	294	01/00→12/03	←		2	**11.8171-0008.1**	**990049**	ATE
			→		2	**11.8171-0008.1**	**990049**	ATE
CHEVROLET - AVEO Hatchback (T300) 03/11→								
Brake Pad Set, disc brake								
1.2	51 - 63	03/11→	←	Rim Size [in]: 14		**13.0460-5518.2**	**605518**	+ WK

	kW				! #			
CHEVROLET - AVEO Hatchback (T300) 03/11→								
Brake Pad Set, disc brake								
1.2 LPG	63	11/12→12/15	←	Rim Size [in]: 14		**13.0460-5518.2**	**605518**	+ WK
1.3 D	55 - 70	07/11→12/15						
1.4	74	03/11→						
1.6	85	03/11→						
CHEVROLET - AVEO Saloon (T300) 03/11→								
Brake Pad Set, disc brake								
1.2	51 - 63	03/11→	←	Rim Size [in]: 14		**13.0460-5518.2**	**605518**	+ WK
1.2 LPG	63	11/12→12/15						
1.3 D	55 - 70	07/11→12/15						
1.4	74 - 103	07/11→						
1.6	85	03/11→						
CHEVROLET - COBALT 01/11→								
Brake Pad Set, disc brake								
1.5	77	01/13→	←			**13.0460-5518.2**	**605518**	+ WK
CHEVROLET - CORSA Estate 01/96→12/10								
Guide Bolt, brake caliper								
1.7 D	44	08/00→07/02	←	→ 09/00	2	**11.8171-0008.1**	**990049**	ATE
CHEVROLET - CRUZE Saloon 11/15→								
Brake Disc								
1.4	110 - 114	11/15→	←	Brake Size: 15"		**24.0126-0187.1**	**426187**	Ø 276 Brake Disc Thickness [mm] 26 Minimum thickness [mm] 23 Vented + S
CHEVROLET - LACETTI (J200) 03/03→								
Brake Caliper								
1.4 16V	70	03/05→03/13	→			**24.3321-1703.5**	**241381**	without holder
1.4 LPG	69	01/05→12/12						
1.6	80	03/05→	→			**24.3321-1704.5**	**241382**	without holder
1.8	67 - 90	03/05→						
2.0 D	89	01/07→						
CHEVROLET - LACETTI Estate (J200) 05/03→								
Brake Caliper								
1.6	80	03/05→	→			**24.3321-1703.5**	**241381**	without holder
1.6 LPG	80	06/09→12/11						
1.8	89 - 90	05/03→	→			**24.3321-1704.5**	**241382**	without holder
2.0 D	89	01/07→						
CHEVROLET - LACETTI Saloon (J200) 03/03→03/13								
Brake Caliper								
1.4	69	03/05→03/13	→			**24.3321-1703.5**	**241381**	without holder
1.6	80	03/05→03/13						
1.8	66 - 90	05/03→03/13	→			**24.3321-1704.5**	**241382**	without holder
CHEVROLET - NUBIRA Estate 01/05→12/11								
Brake Caliper								
1.6	80	03/05→12/11	→			**24.3321-1703.5**	**241381**	without holder
1.6 LPG	80	03/05→12/10						
1.8	90	03/05→12/09	→			**24.3321-1704.5**	**241382**	without holder
2.0 D	89	01/07→12/11						
1.8	89	08/05→12/11	→	→ 12/10;		**24.3321-1703.5**	**241381**	without holder
			→	→ 12/10;		**24.3321-1704.5**	**241382**	without holder
CHEVROLET - NUBIRA Saloon 01/05→12/11								
Brake Caliper								
1.4	69 - 70	01/05→12/08	→			**24.3321-1703.5**	**241381**	without holder
1.6	76 - 80	03/05→12/11	→			**24.3321-1704.5**	**241382**	without holder

© 2022 Continental Aftermarket & Services GmbH

	kW				! #			
CHEVROLET - NUBIRA Saloon 01/05→12/11								
Brake Caliper								
1.8	89 - 90	03/05→12/09				**24.3321-1703.5**	**241381**	without holder
2.0 D	89	01/05→12/11				**24.3321-1704.5**	**241382**	without holder
CHEVROLET - ZAFIRA (F75) 02/99→12/12								
Guide Bolt, brake caliper								
2.0	89	08/04→12/12		→ 06/05	2	**11.8171-0008.1**	**990049**	ATE
CHRYSLER - DELTA 08/11→								
Guide Bolt, brake caliper								
2.0 D Multijet	121	08/11→			2	**11.8171-0008.1**	**990049**	ATE
CHRYSLER - YPSILON 05/11→								
Guide Bolt, brake caliper								
0.9 Twinair 1.2 1.3 Multijet	63 51 70	05/11→ 05/11→ 05/11→			2	**11.8171-0008.1**	**990049**	ATE
CITROËN - AMI (9A_) 04/20→								
Brake Pad Set, disc brake								
Electric	6	04/20→				**13.0460-3994.2** **13.0470-3994.2**	**603994** **LD3994**	BOS 23599 19,0 - WE / - WK + Zub BOS 23599 19,0 - WE / - WK + Zub Ceramic
Brake Disc								
Electric	6	04/20→				**24.0122-0194.1**	**422194**	Ø 266 Brake Disc Thickness [mm] 22 Minimum thickness [mm] 20 Vented + S
Wheel Brake Cylinder								
Electric	6	04/20→			2	**24.3220-1743.3**	**020556**	ALU
CITROËN - BERLINGO / BERLINGO FIRST Box Body/MPV (M_) 07/96→12/11								
Spring, brake caliper								
Electric	42	01/11→12/11			2	**11.8116-0356.1**	**390586**	ATE
Guide Bolt, brake caliper								
Electric	42	01/11→12/11			2	**11.8171-0008.1**	**990049**	ATE
Brake Pad Set, disc brake								
1.1 i 1.4 BiFuel	44 55	07/96→03/08 07/96→10/02		Orga 09128→		**13.0460-3994.2** **13.0470-3994.2**	**603994** **LD3994**	BOS 23599 19,0 - WE / - WK + Zub BOS 23599 19,0 - WE / - WK + Zub Ceramic
				Orga 09429→		**13.0460-3994.2** **13.0470-3994.2**	**603994** **LD3994**	BOS 23599 19,0 - WE / - WK + Zub BOS 23599 19,0 - WE / - WK + Zub Ceramic
1.4 bivalent 1.6 HDI 75 1.6 HDI 90	48 55 66	11/02→12/11 07/05→12/11 07/05→12/11		→ 03/08		**13.0460-3994.2** **13.0470-3994.2**	**603994** **LD3994**	BOS 23599 19,0 - WE / - WK + Zub BOS 23599 19,0 - WE / - WK + Zub Ceramic
1.4 i	55	07/96→12/11		Orga 09128→; → 03/08		**13.0460-3994.2** **13.0470-3994.2**	**603994** **LD3994**	BOS 23599 19,0 - WE / - WK + Zub BOS 23599 19,0 - WE / - WK + Zub Ceramic
				Orga 09429→; → 03/08		**13.0460-3994.2** **13.0470-3994.2**	**603994** **LD3994**	BOS 23599 19,0 - WE / - WK + Zub BOS 23599 19,0 - WE / - WK + Zub Ceramic
1.4 i bivalent 1.6 HDI 92	55 68	04/03→10/05 11/09→12/10				**13.0460-3994.2** **13.0470-3994.2**	**603994** **LD3994**	BOS 23599 19,0 - WE / - WK + Zub BOS 23599 19,0 - WE / - WK + Zub Ceramic
1.6 16V 1.8 D 1.8 i	80 - 81 43 66	10/00→03/08 07/96→10/02 05/98→10/02		Orga 09128→		**13.0460-3994.2** **13.0470-3994.2**	**603994** **LD3994**	BOS 23599 19,0 - WE / - WK + Zub BOS 23599 19,0 - WE / - WK + Zub Ceramic

© 2022 Continental Aftermarket & Services GmbH

	kW				! #			
CITROËN - BERLINGO / BERLINGO FIRST Box Body/MPV (M_) 07/96→12/11								
Brake Pad Set, disc brake								
1.9 D 1.9 D 70 4WD 2.0 HDI 90 4WD	51 51 66	07/96→12/03 07/98→03/06 11/00→10/05		Orga 09128→		**13.0460-3994.2** **13.0470-3994.2**	**603994** **LD3994**	BOS 23599 19,0 - WE / - WK + Zub BOS 23599 19,0 - WE / - WK + Zub Ceramic
1.9 D 70 2.0 HDI 90	51 66	04/99→12/11 12/99→12/11		Orga 09128→; → 03/08		**13.0460-3994.2** **13.0470-3994.2**	**603994** **LD3994**	BOS 23599 19,0 - WE / - WK + Zub BOS 23599 19,0 - WE / - WK + Zub Ceramic
Brake Disc								
1.1 i 1.4 BiFuel	44 55	07/96→03/08 07/96→10/02		Orga 09128→		**24.0122-0194.1**	**422194**	Ø 266 Brake Disc Thickness [mm] 22 Minimum thickness [mm] 20 Vented + S
				Orga 09429→		**24.0122-0194.1**	**422194**	Ø 266 Brake Disc Thickness [mm] 22 Minimum thickness [mm] 20 Vented + S
1.4 bivalent 1.6 HDI 75 1.6 HDI 90	48 55 66	11/02→12/11 07/05→12/11 07/05→12/11		→ 03/08		**24.0122-0194.1**	**422194**	Ø 266 Brake Disc Thickness [mm] 22 Minimum thickness [mm] 20 Vented + S
1.4 i	55	07/96→12/11		Orga 09429→; → 03/08		**24.0122-0194.1**	**422194**	Ø 266 Brake Disc Thickness [mm] 22 Minimum thickness [mm] 20 Vented + S
				Orga 09128→; → 03/08		**24.0122-0194.1**	**422194**	Ø 266 Brake Disc Thickness [mm] 22 Minimum thickness [mm] 20 Vented + S
1.4 i bivalent 1.6 HDI 92	55 68	04/03→10/05 11/09→12/10				**24.0122-0194.1**	**422194**	Ø 266 Brake Disc Thickness [mm] 22 Minimum thickness [mm] 20 Vented + S
1.6 16V 1.8 D 1.8 i 1.9 D 1.9 D 70 4WD 2.0 HDI 90 4WD	80 - 81 43 66 51 51 66	10/00→03/08 07/96→10/02 05/98→10/02 07/96→12/03 07/98→03/06 11/00→10/05		Orga 09128→		**24.0122-0194.1**	**422194**	Ø 266 Brake Disc Thickness [mm] 22 Minimum thickness [mm] 20 Vented + S
1.9 D 70 2.0 HDI 90	51 66	04/99→12/11 12/99→12/11		Orga 09128→; → 03/08		**24.0122-0194.1**	**422194**	Ø 266 Brake Disc Thickness [mm] 22 Minimum thickness [mm] 20 Vented + S
CITROËN - BERLINGO / BERLINGO FIRST MPV (MF_, GJK_, GFK_) 07/96→12/11								
Brake Pad Set, disc brake								
1.1 i 1.4 i	44 55	07/96→05/08 07/96→12/11		Orga 09128→; → 03/08		**13.0460-3994.2** **13.0470-3994.2**	**603994** **LD3994**	BOS 23599 19,0 - WE / - WK + Zub BOS 23599 19,0 - WE / - WK + Zub Ceramic
				Orga 09429→; → 03/08		**13.0460-3994.2** **13.0470-3994.2**	**603994** **LD3994**	BOS 23599 19,0 - WE / - WK + Zub BOS 23599 19,0 - WE / - WK + Zub Ceramic
1.4 1.6 HDI 92	53 68	11/02→10/05 11/09→12/10				**13.0460-3994.2** **13.0470-3994.2**	**603994** **LD3994**	BOS 23599 19,0 - WE / - WK + Zub BOS 23599 19,0 - WE / - WK + Zub Ceramic
1.4 bivalent 1.4 i bivalent 1.6 HDI 75	48 55 55	11/02→12/11 04/03→10/08 07/05→12/11		→ 03/08		**13.0460-3994.2** **13.0470-3994.2**	**603994** **LD3994**	BOS 23599 19,0 - WE / - WK + Zub BOS 23599 19,0 - WE / - WK + Zub Ceramic
1.6 16V	80 - 81	10/00→12/11		Orga 09128→; → 03/08; - ESP		**13.0460-3994.2** **13.0470-3994.2**	**603994** **LD3994**	BOS 23599 19,0 - WE / - WK + Zub BOS 23599 19,0 - WE / - WK + Zub Ceramic
1.6 HDI 90	66	07/05→05/08		→ 03/08; - ESP		**13.0460-3994.2** **13.0470-3994.2**	**603994** **LD3994**	BOS 23599 19,0 - WE / - WK + Zub BOS 23599 19,0 - WE / - WK + Zub Ceramic
1.8 D 1.8 i	43 66	07/98→10/02 05/97→10/02		Orga 09128→		**13.0460-3994.2**	**603994**	BOS 23599 19,0 - WE / - WK + Zub

© 2022 Continental Aftermarket & Services GmbH

	kW				! #			
CITROËN - BERLINGO / BERLINGO FIRST MPV (MF_, GJK_, GFK_) 07/96→12/11								
Brake Pad Set, disc brake								
1.8 i 4WD 1.9 D 1.9 D 4WD	66 50 - 51 51	04/97→10/01 07/96→10/05 07/98→10/05	←	Orga 09128→		**13.0470-3994.2**	**LD3994**	BOS 23599 19,0 - WE / - WK + Zub Ceramic
2.0 HDi 4x4 2.0 HDI 90	66 66	11/02→10/05 12/99→10/05	←	Orga 09128→; - ESP		**13.0460-3994.2** **13.0470-3994.2**	**603994** **LD3994**	BOS 23599 19,0 - WE / - WK + Zub BOS 23599 19,0 - WE / - WK + Zub Ceramic
Brake Disc								
1.1 i 1.4 i	44 55	07/96→05/08 07/96→12/11	←	Orga 09128→; → 03/08		**24.0122-0194.1**	**422194**	Ø 266 Brake Disc Thickness [mm] 22 Minimum thickness [mm] 20 Vented + S
			←	Orga 09429→; → 03/08		**24.0122-0194.1**	**422194**	Ø 266 Brake Disc Thickness [mm] 22 Minimum thickness [mm] 20 Vented + S
1.4 1.6 HDI 92	53 68	11/02→10/05 11/09→12/10	←			**24.0122-0194.1**	**422194**	Ø 266 Brake Disc Thickness [mm] 22 Minimum thickness [mm] 20 Vented + S
1.4 bivalent 1.4 i bivalent 1.6 HDI 75	48 55 55	11/02→12/11 04/03→10/08 07/05→12/11	←	→ 03/08		**24.0122-0194.1**	**422194**	Ø 266 Brake Disc Thickness [mm] 22 Minimum thickness [mm] 20 Vented + S
1.6 16V	80 - 81	10/00→12/11	←	Orga 09128→; → 03/08; - ESP		**24.0122-0194.1**	**422194**	Ø 266 Brake Disc Thickness [mm] 22 Minimum thickness [mm] 20 Vented + S
1.6 HDI 90	66	07/05→05/08	←	→ 03/08; - ESP		**24.0122-0194.1**	**422194**	Ø 266 Brake Disc Thickness [mm] 22 Minimum thickness [mm] 20 Vented + S
1.8 D 1.8 i 1.8 i 4WD 1.9 D 1.9 D 4WD	43 66 66 50 - 51 51	07/98→10/02 05/97→10/02 04/97→10/01 07/96→10/05 07/98→10/05	←	Orga 09128→		**24.0122-0194.1**	**422194**	Ø 266 Brake Disc Thickness [mm] 22 Minimum thickness [mm] 20 Vented + S
2.0 HDi 4x4 2.0 HDI 90	66 66	11/02→10/05 12/99→10/05	←	Orga 09128→; - ESP		**24.0122-0194.1**	**422194**	Ø 266 Brake Disc Thickness [mm] 22 Minimum thickness [mm] 20 Vented + S
CITROËN - BERLINGO (ER_, EC_) 06/18→								
Guide Bolt, brake caliper								
1.2 PureTech 110 1.2 PureTech 130 1.5 BlueHDi 100 1.5 BlueHDi 130 1.5 BlueHDi 75 e-Berlingo	81 96 75 96 56 100	06/18→ 07/19→ 06/18→ 06/18→ 06/18→ 07/21→	←		2	**11.8171-0008.1**	**990049**	ATE
Brake Pad Set, disc brake								
1.2 PureTech 110 1.2 PureTech 130 1.5 BlueHDi 100 1.5 BlueHDi 130 1.5 BlueHDi 75 e-Berlingo	81 96 75 96 56 100	06/18→ 07/19→ 06/18→ 06/18→ 06/18→ 07/21→	←	for brake disc diameter [mm]: 283		**13.0460-3870.2** **13.0470-3870.2**	**603870** **LD3870**	BOS 25895 18,5 - WE / - WK + Zub BOS 25895 18,5 - WE / - WK + Zub Ceramic
			←	for brake disc diameter [mm]: 304; →Orga 16246		**13.0460-7339.2**	**607339**	ATE + WE / - WK
			→	+ eFSB		**13.0460-3871.2** **13.0470-3871.2**	**603871** **LD3871**	BOS 25839 17,8 - WE / - WK + Zub BOS 25839 17,8 - WE / - WK + Zub Ceramic
CITROËN - BERLINGO Box Body/MPV (B9) 04/08→								
Spring, brake caliper								
1.6 1.6 BlueHDi 100 1.6 BlueHDi 100 4x4 1.6 BlueHDi 120 1.6 HDi 110 1.6 HDi 115	66 - 80 73 73 88 80 - 82 84	04/08→ 12/14→ 12/14→ 12/14→ 04/08→ 07/10→			2	**11.8116-0356.1**	**390586**	ATE

	kW				! #			
CITROËN - BERLINGO Box Body/MPV (B9) 04/08→								
Spring, brake caliper								
1.6 HDi 115 4x4 1.6 HDi 75 1.6 HDi 75 4x4 1.6 HDi 90 1.6 HDi 90 16V 1.6 HDi 90 4x4 1.6 VTi 120 1.6 VTi 95 Electric	84 55 55 66 - 68 66 66 88 72 49	02/12→ 04/08→ 02/12→ 07/10→ 04/08→ 02/12→ 11/09→ 07/10→ 01/13→			2	**11.8116-0356.1**	**390586**	ATE
1.6 HDi / BlueHDi 75	55	07/10→		04/15→	2	**11.8116-0356.1**	**390586**	ATE
Electric	35	01/13→		02/13→	2	**11.8116-0356.1**	**390586**	ATE
PureTech 110	81	01/18→	←			**11.8116-0356.1**	**390586**	ATE
Guide Bolt, brake caliper								
1.6 1.6 BlueHDi 100 1.6 BlueHDi 100 4x4 1.6 BlueHDi 120 1.6 HDi 110 1.6 HDi 115 1.6 HDi 115 4x4 1.6 HDi 75 1.6 HDi 75 4x4 1.6 HDi 90 1.6 HDi 90 16V 1.6 HDi 90 4x4 1.6 VTi 120 1.6 VTi 95 Electric	66 - 80 73 73 88 80 - 82 84 84 55 55 66 - 68 66 66 88 72 49	04/08→ 12/14→ 12/14→ 12/14→ 04/08→ 07/10→ 02/12→ 04/08→ 02/12→ 07/10→ 04/08→ 02/12→ 11/09→ 07/10→ 01/13→			2	**11.8171-0008.1**	**990049**	ATE
1.6 HDi / BlueHDi 75	55	07/10→		04/15→	2	**11.8171-0008.1**	**990049**	ATE
Electric	35	01/13→		02/13→	2	**11.8171-0008.1**	**990049**	ATE
PureTech 110	81	01/18→	←			**11.8171-0008.1**	**990049**	ATE
CITROËN - BERLINGO Box Body/MPV (K9) 06/18→								
Guide Bolt, brake caliper								
1.5 BlueHDi 100 1.5 BlueHDi 130 1.5 BlueHDi 130 4x4 1.5 BlueHDi 75 1.6 BlueHDi 100 1.6 BlueHDi 75 e-Berlingo PureTech 110 PureTech 130	75 96 96 55 73 55 100 81 96	06/18→ 06/18→ 06/18→ 10/19→ 06/18→ 06/18→ 07/21→ 06/18→ 10/19→	←		2	**11.8171-0008.1**	**990049**	ATE
Brake Pad Set, disc brake								
1.5 BlueHDi 100 1.5 BlueHDi 130 1.5 BlueHDi 130 4x4 1.5 BlueHDi 75 1.6 BlueHDi 100 1.6 BlueHDi 75 e-Berlingo PureTech 110 PureTech 130	75 96 96 55 73 55 100 81 96	06/18→ 06/18→ 06/18→ 10/19→ 06/18→ 06/18→ 07/21→ 06/18→ 10/19→	←	for brake disc diameter [mm]: 283		**13.0460-3870.2** **13.0470-3870.2**	**603870** **LD3870**	BOS 25895 18,5 - WE / - WK + Zub BOS 25895 18,5 - WE / - WK + Zub Ceramic
			←	for brake disc diameter [mm]: 304; →Orga 16246		**13.0460-7339.2**	**607339**	ATE + WE / - WK
			→	+ eFSB		**13.0460-3871.2** **13.0470-3871.2**	**603871** **LD3871**	BOS 25839 17,8 - WE / - WK + Zub BOS 25839 17,8 - WE / - WK + Zub Ceramic
CITROËN - BERLINGO MULTISPACE (B9) 04/08→								
Spring, brake caliper								
1.2 PureTech 110 1.6 1.6 BlueHDi 100 1.6 BlueHDi 120 1.6 HDi 110 1.6 HDi 115 1.6 HDi 115 4x4 1.6 HDi 75 16V 1.6 HDi 90 1.6 HDi 90 4x4 1.6 VTi 120 1.6 VTi 95	81 66 - 81 73 88 80 - 82 84 84 55 66 - 68 66 88 72	02/16→ 04/08→ 12/14→ 12/14→ 04/08→ 07/10→ 02/12→ 04/08→ 04/08→ 02/12→12/14 11/09→ 07/10→			2	**11.8116-0356.1**	**390586**	ATE

© 2022 Continental Aftermarket & Services GmbH

	kW				! #			
CITROËN - BERLINGO MULTISPACE (B9) 04/08→								
Spring, brake caliper								
1.6 HDi 75 / BlueHDi 75	55	04/08→		04/15→	2	**11.8116-0356.1**	**390586**	ATE
Electric	49	09/17→	←			**11.8116-0356.1**	**390586**	ATE
Guide Bolt, brake caliper								
1.2 PureTech 110 1.6 1.6 BlueHDi 100 1.6 BlueHDi 120 1.6 HDi 110 1.6 HDi 115 1.6 HDi 115 4x4 1.6 HDi 75 16V 1.6 HDi 90 1.6 HDi 90 4x4 1.6 VTi 120 1.6 VTi 95	81 66 - 81 73 88 80 - 82 84 84 55 66 - 68 66 88 72	02/16→ 04/08→ 12/14→ 12/14→ 04/08→ 07/10→ 02/12→ 04/08→ 04/08→ 02/12→12/14 11/09→ 07/10→			2	**11.8171-0008.1**	**990049**	ATE
1.6 HDi 75 / BlueHDi 75	55	04/08→		04/15→	2	**11.8171-0008.1**	**990049**	ATE
Electric	49	09/17→	←			**11.8171-0008.1**	**990049**	ATE
CITROËN - BERLINGO Platform/Chassis (B9) 04/08→								
Spring, brake caliper								
1.6 BlueHDi 100 1.6 HDi 90 1.6 HDi 90 16V 1.6 HDi 92	73 66 66 68	12/14→ 07/10→ 04/08→ 07/10→12/17			2	**11.8116-0356.1**	**390586**	ATE
Guide Bolt, brake caliper								
1.6 BlueHDi 100 1.6 HDi 90 1.6 HDi 90 16V 1.6 HDi 92	73 66 66 68	12/14→ 07/10→ 04/08→ 07/10→12/17			2	**11.8171-0008.1**	**990049**	ATE
CITROËN - C1 II (PA_, PS_) 04/14→								
Brake Master Cylinder								
1.0 VTi 68 1.0 VTi 72 1.2 VTi 82	51 53 60	04/14→ 06/18→ 04/14→		for left-hand drive vehicles; - ESP		**24.4120-1712.3**	**011092**	Ø 20.6 without brake fluid reservoir
CITROËN - C2 (JM_) 07/03→09/17								
Brake Pad Set, disc brake								
1.4 HDi	50 - 51	07/03→12/09	←	Orga 10801→; Vented; Rim Size [in]: 16		**13.0460-3994.2** **13.0470-3994.2**	**603994** **LD3994**	BOS 23599 19,0 - WE / - WK + Zub BOS 23599 19,0 - WE / - WK + Zub Ceramic
1.6	80	07/03→10/10	←	Orga 10801→; → 12/09; Rim Size [in]: 16		**13.0460-3994.2** **13.0470-3994.2**	**603994** **LD3994**	BOS 23599 19,0 - WE / - WK + Zub BOS 23599 19,0 - WE / - WK + Zub Ceramic
1.6 HDi 1.6 VTS	80 90	09/05→12/09 10/04→12/09	←			**13.0460-3994.2** **13.0470-3994.2**	**603994** **LD3994**	BOS 23599 19,0 - WE / - WK + Zub BOS 23599 19,0 - WE / - WK + Zub Ceramic
Brake Disc								
1.4 1.4 16V 1.4 HDi 1.6 HDi 1.6 VTS	54 - 55 65 50 - 51 80 90	09/03→12/09 04/05→12/09 07/03→12/09 09/05→12/09 10/04→12/09	←			**24.0122-0194.1**	**422194**	Ø 266 Brake Disc Thickness [mm] 22 Minimum thickness [mm] 20 Vented + S
1.6	80	07/03→10/10	←	→ 12/09		**24.0122-0194.1**	**422194**	Ø 266 Brake Disc Thickness [mm] 22 Minimum thickness [mm] 20 Vented + S
CITROËN - C2 ENTERPRISE (JG_) 11/03→12/09								
Brake Pad Set, disc brake								
1.4 HDi	50 - 51	11/03→12/09	←	Orga 10801→; Vented; Rim Size [in]: 16		**13.0460-3994.2**	**603994**	BOS 23599 19,0 - WE / - WK + Zub

	kW				! #			
CITROËN - C2 ENTERPRISE (JG_) 11/03→12/09								
Brake Pad Set, disc brake								
1.4 HDi	50 - 51	11/03→12/09		Orga 10801→; Vented; Rim Size [in]: 16		**13.0470-3994.2**	**LD3994**	BOS 23599 19,0 - WE / - WK + Zub Ceramic
Brake Disc								
1.4 HDi	50 - 51	11/03→12/09				**24.0122-0194.1**	**422194**	Ø 266 Brake Disc Thickness [mm] 22 Minimum thickness [mm] 20 Vented + S
CITROËN - C3 I (FC_, FN_) 02/02→								
Brake Pad Set, disc brake								
1.4 16V 1.6 16V HDi	65 66 - 80	12/03→ 09/05→		→ 08/09		**13.0460-3994.2** **13.0470-3994.2**	**603994** **LD3994**	BOS 23599 19,0 - WE / - WK + Zub BOS 23599 19,0 - WE / - WK + Zub Ceramic
1.6 16V	80	02/02→08/10		→ 08/09; Manual Transmission		**13.0460-3994.2** **13.0470-3994.2**	**603994** **LD3994**	BOS 23599 19,0 - WE / - WK + Zub BOS 23599 19,0 - WE / - WK + Zub Ceramic
1.6 16V	81	05/03→09/05		Manual Transmission		**13.0460-3994.2** **13.0470-3994.2**	**603994** **LD3994**	BOS 23599 19,0 - WE / - WK + Zub BOS 23599 19,0 - WE / - WK + Zub Ceramic
Brake Disc								
1.4 16V 1.4 16V HDi 1.6 16V HDi	65 66 66 - 80	12/03→ 02/02→ 09/05→		→ 08/09		**24.0122-0194.1**	**422194**	Ø 266 Brake Disc Thickness [mm] 22 Minimum thickness [mm] 20 Vented + S
1.6 16V	80	02/02→08/10		→ 08/09; Manual Transmission		**24.0122-0194.1**	**422194**	Ø 266 Brake Disc Thickness [mm] 22 Minimum thickness [mm] 20 Vented + S
1.6 16V	81	05/03→09/05		Manual Transmission		**24.0122-0194.1**	**422194**	Ø 266 Brake Disc Thickness [mm] 22 Minimum thickness [mm] 20 Vented + S
CITROËN - C3 II (SC_) 09/09→								
Brake Pad Set, disc brake								
1.0 VTi 68 1.2 VTi 82	50 60	08/12→ 06/12→09/16		10/12→		**13.0460-3994.2** **13.0470-3994.2**	**603994** **LD3994**	BOS 23599 19,0 - WE / - WK + Zub BOS 23599 19,0 - WE / - WK + Zub Ceramic
1.1 BiFuel 1.1 i 1.4 1.4 HDi 70 1.4 LPG 1.4 VTi 1.4 VTi 95 1.6 HDi 1.6 HDi 90	44 44 54 50 54 72 70 68 66	11/10→ 09/09→01/13 11/09→09/16 11/09→ 07/10→ 11/09→ 11/09→ 11/09→09/16 11/09→				**13.0460-3994.2** **13.0470-3994.2**	**603994** **LD3994**	BOS 23599 19,0 - WE / - WK + Zub BOS 23599 19,0 - WE / - WK + Zub Ceramic
1.2 THP 110 1.4 LPG 1.6 BlueHDi 100 1.6 BlueHDi 75 1.6 VTi 120	81 70 73 55 88	10/14→ 06/13→ 07/14→ 04/15→ 11/09→		for brake disc diameter [mm]: 266		**13.0460-3994.2** **13.0470-3994.2**	**603994** **LD3994**	BOS 23599 19,0 - WE / - WK + Zub BOS 23599 19,0 - WE / - WK + Zub Ceramic
Brake Disc								
1.0 VTi 68 1.2 VTi 82	50 60	08/12→ 06/12→09/16		10/12→		**24.0122-0194.1**	**422194**	Ø 266 Brake Disc Thickness [mm] 22 Minimum thickness [mm] 20 Vented + S
1.1 BiFuel 1.1 i 1.2 THP 110 1.4 1.4 HDi 70 1.4 LPG 1.4 VTi 1.4 VTi 95 1.6 BlueHDi 100 1.6 BlueHDi 75	44 44 81 54 50 54 - 70 72 70 73 55	11/10→ 09/09→01/13 10/14→ 11/09→09/16 11/09→ 07/10→ 11/09→ 11/09→ 07/14→ 04/15→				**24.0122-0194.1**	**422194**	Ø 266 Brake Disc Thickness [mm] 22 Minimum thickness [mm] 20 Vented + S

© 2022 Continental Aftermarket & Services GmbH

	kW				! #			
CITROËN - C3 II (SC_) 09/09→								
Brake Disc								
1.6 HDi 1.6 HDi 90 1.6 VTi 120	68 66 88	11/09→09/16 11/09→ 11/09→				**24.0122-0194.1**	**422194**	Ø 266 Brake Disc Thickness [mm] 22 Minimum thickness [mm] 20 Vented + S
Accessory Kit, brake shoes								
1.2 THP 110 1.4 LPG 1.4 VTi 1.4 VTi 95 1.6 BlueHDi 100 1.6 BlueHDi 75	81 70 72 70 73 55	10/14→ 06/13→ 11/09→ 11/09→ 07/14→ 04/15→				**03.0137-9228.2**	**669228**	BDX
CITROËN - C3 II Hatchback Van (SC_) 06/10→								
Brake Pad Set, disc brake								
1.4 HDi	50	06/10→09/16				**13.0460-3994.2** **13.0470-3994.2**	**603994** **LD3994**	BOS 23599 19,0 - WE / - WK + Zub BOS 23599 19,0 - WE / - WK + Zub Ceramic
1.6 BlueHDi	55	03/15→09/16		for brake disc diameter [mm]: 266		**13.0460-3994.2** **13.0470-3994.2**	**603994** **LD3994**	BOS 23599 19,0 - WE / - WK + Zub BOS 23599 19,0 - WE / - WK + Zub Ceramic
Brake Disc								
1.4 HDi 1.6 BlueHDi	50 55	06/10→09/16 03/15→09/16				**24.0122-0194.1**	**422194**	Ø 266 Brake Disc Thickness [mm] 22 Minimum thickness [mm] 20 Vented + S
Accessory Kit, brake shoes								
1.6 BlueHDi	55	03/15→09/16				**03.0137-9228.2**	**669228**	BDX
CITROËN - C3 III (SX) 07/16→								
Brake Pad Set, disc brake								
1.2 PureTech 82 1.2 PureTech 82 LPG 1.2 THP 110 1.2 VTi 68 1.2 VTi 82 1.2 VTi 82 LPG 1.5 BlueHDi 100 1.6 BlueHDi 100 1.6 BlueHDi 75 1.6 VTi	61 61 81 50 60 60 75 73 55 85	05/18→ 05/18→ 07/16→ 07/16→ 07/16→ 07/16→ 05/18→ 07/16→ 07/16→ 02/17→		for brake disc diameter [mm]: 266		**13.0460-3994.2** **13.0470-3994.2**	**603994** **LD3994**	BOS 23599 19,0 - WE / - WK + Zub BOS 23599 19,0 - WE / - WK + Zub Ceramic
Brake Disc								
1.2 PureTech 82 1.2 PureTech 82 LPG 1.2 THP 110 1.2 VTi 68 1.2 VTi 82 1.2 VTi 82 LPG 1.5 BlueHDi 100 1.6 BlueHDi 100 1.6 BlueHDi 75 1.6 VTi	61 61 81 50 60 60 75 73 55 85	05/18→ 05/18→ 07/16→ 07/16→ 07/16→ 07/16→ 05/18→ 07/16→ 07/16→ 02/17→				**24.0122-0194.1**	**422194**	Ø 266 Brake Disc Thickness [mm] 22 Minimum thickness [mm] 20 Vented + S
Wheel Brake Cylinder								
1.2 PureTech 82 1.2 PureTech 82 LPG 1.2 THP 110 1.2 VTi 68 1.2 VTi 82 1.2 VTi 82 LPG 1.5 BlueHDi 100 1.6 BlueHDi 100 1.6 BlueHDi 75 1.6 VTi	61 61 81 50 60 60 75 73 55 85	05/18→ 05/18→ 07/16→ 07/16→ 07/16→ 07/16→ 05/18→ 07/16→ 07/16→ 02/17→		Inner Br. Drum Diam. [in]: 8	2	**24.3220-1743.3**	**020556**	ALU
Accessory Kit, brake shoes								
1.2 PureTech 82 1.2 PureTech 82 LPG 1.2 THP 110 1.2 VTi 68 1.2 VTi 82 1.2 VTi 82 LPG	61 61 81 50 60 60	05/18→ 05/18→ 07/16→ 07/16→ 07/16→ 07/16→		Inner Br. Drum Diam. [in]: 9		**03.0137-9228.2**	**669228**	BDX

	kW				! #			
CITROËN - C3 III (SX) 07/16→								
Accessory Kit, brake shoes								
1.5 BlueHDi 100	75	05/18→	➡	Inner Br. Drum Diam. [in]: 9		**03.0137-9228.2**	**669228**	BDX
1.6 BlueHDi 100	73	07/16→						
1.6 BlueHDi 75	55	07/16→						
1.6 VTi	85	02/17→						
CITROËN - C3 III Van (SX_, SY_) 07/16→								
Brake Pad Set, disc brake								
BlueHDi 100	73 - 75	03/19→	⬅	for brake disc diameter [mm]: 266		**13.0460-3994.2**	**603994**	BOS 23599 19,0 - WE / - WK + Zub
BlueHDi 75	55	03/19→				**13.0470-3994.2**	**LD3994**	BOS 23599 19,0 - WE / - WK + Zub Ceramic
PureTech 110	81	03/19→						
PureTech 82	61	03/19→						
Brake Disc								
BlueHDi 100	73 - 75	03/19→	⬅			**24.0122-0194.1**	**422194**	Ø 266 Brake Disc Thickness [mm] 22 Minimum thickness [mm] 20 Vented + S
BlueHDi 75	55	03/19→						
PureTech 110	81	03/19→						
PureTech 82	61	03/19→						
Wheel Brake Cylinder								
BlueHDi 100	73 - 75	03/19→	➡	Inner Br. Drum Diam. [in]: 8		**24.3220-1743.3**	**020556**	ALU
BlueHDi 75	55	03/19→						
PureTech 110	81	03/19→						
PureTech 82	61	03/19→						
Accessory Kit, brake shoes								
BlueHDi 100	73 - 75	03/19→	➡	Inner Br. Drum Diam. [in]: 9		**03.0137-9228.2**	**669228**	BDX
BlueHDi 75	55	03/19→						
PureTech 110	81	03/19→						
PureTech 82	61	03/19→						
CITROËN - C3 AIRCROSS II (2R_, 2C_) 06/17→								
Brake Pad Set, disc brake								
1.2 PureTech 110	81	06/17→	⬅	for brake disc diameter [mm]: 266		**13.0460-3994.2**	**603994**	BOS 23599 19,0 - WE / - WK + Zub
1.2 PureTech 130	96	07/17→				**13.0470-3994.2**	**LD3994**	BOS 23599 19,0 - WE / - WK + Zub Ceramic
1.2 PureTech 82	60	06/17→						
1.5 BlueHDi 100	73 - 75	08/18→						
1.5 BlueHDi 110	81	10/20→						
1.5 BlueHDi 120	88	08/18→						
1.6 BlueHDi 100	73	07/17→						
1.6 BlueHDi 115	85	06/17→						
1.6 BlueHDi 120	88	07/17→						
1.6 HDi 92	68	10/17→						
Brake Disc								
1.2 PureTech 110	81	06/17→	⬅			**24.0122-0194.1**	**422194**	Ø 266 Brake Disc Thickness [mm] 22 Minimum thickness [mm] 20 Vented + S
1.2 PureTech 130	96	07/17→						
1.2 PureTech 82	60	06/17→						
1.5 BlueHDi 100	73 - 75	08/18→						
1.5 BlueHDi 110	81	10/20→						
1.5 BlueHDi 120	88	08/18→						
1.6 BlueHDi 100	73	07/17→						
1.6 BlueHDi 115	85	06/17→						
1.6 BlueHDi 120	88	07/17→						
1.6 HDi 92	68	10/17→						
CITROËN - C3 AIRCROSS II Van (2C_, 2R_) 06/17→								
Brake Pad Set, disc brake								
1.5 BlueHDI 100	73	05/19→	⬅	for brake disc diameter [mm]: 266		**13.0460-3994.2**	**603994**	BOS 23599 19,0 - WE / - WK + Zub
1.5 BlueHDI 120	88	05/19→				**13.0470-3994.2**	**LD3994**	BOS 23599 19,0 - WE / - WK + Zub Ceramic
1.6 BlueHDI 100	73	05/19→						
PureTech 82	60 - 81	05/19→						
Brake Disc								
1.5 BlueHDI 100	73	05/19→	⬅			**24.0122-0194.1**	**422194**	Ø 266 Brake Disc Thickness [mm] 22 Minimum thickness [mm] 20 Vented + S
1.5 BlueHDI 120	88	05/19→						
1.6 BlueHDI 100	73	05/19→						
PureTech 82	60 - 81	05/19→						

© 2022 Continental Aftermarket & Services GmbH

	kW				! #			
CITROËN - C3 PICASSO (SH_) 02/09→								
Brake Pad Set, disc brake								
1.2 THP 110 1.4 VTi 95 1.4 VTi 95 LPG 1.6 BlueHDi 100 1.6 HDi 1.6 HDi 110 1.6 HDi 115 1.6 HDI 90 1.6 VTi 120	81 70 70 73 66 - 80 82 84 68 88	01/15→ 02/09→ 01/12→ 01/15→ 02/09→ 05/10→ 01/13→ 07/10→ 02/09→	←	for brake disc diameter [mm]: 266		**13.0460-3994.2** **13.0470-3994.2**	**603994** **LD3994**	BOS 23599 19,0 - WE / - WK + Zub BOS 23599 19,0 - WE / - WK + Zub Ceramic
1.6 VTi	84	07/09→	←	10/16→; for brake disc diameter [mm]: 266		**13.0460-3994.2** **13.0470-3994.2**	**603994** **LD3994**	BOS 23599 19,0 - WE / - WK + Zub BOS 23599 19,0 - WE / - WK + Zub Ceramic
Brake Disc								
1.2 THP 110 1.4 VTi 95 1.4 VTi 95 LPG 1.6 BlueHDi 100 1.6 HDi 1.6 HDi 110 1.6 HDi 115 1.6 HDI 90 1.6 VTi 120	81 70 70 73 66 - 80 82 84 68 88	01/15→ 02/09→ 01/12→ 01/15→ 02/09→ 05/10→ 01/13→ 07/10→ 02/09→	←			**24.0122-0194.1**	**422194**	Ø 266 Brake Disc Thickness [mm] 22 Minimum thickness [mm] 20 Vented + S
1.6 VTi	84	07/09→	←	10/16→		**24.0122-0194.1**	**422194**	Ø 266 Brake Disc Thickness [mm] 22 Minimum thickness [mm] 20 Vented + S
CITROËN - C3 Pluriel (HB_) 05/03→								
Brake Disc								
1.4 1.4 HDi 1.6	54 - 55 50 80	05/03→ 04/04→ 05/03→	←	→ 07/10		**24.0122-0194.1**	**422194**	Ø 266 Brake Disc Thickness [mm] 22 Minimum thickness [mm] 20 Vented + S
CITROËN - C4 I (LC_) 11/04→11/14								
Spring, brake caliper								
2.0 16V 2.0 HDi	130 100 - 103	11/04→07/08 11/04→07/11		Orga 11578→	2	**11.8116-0356.1**	**390586**	ATE
Guide Bolt, brake caliper								
2.0 16V 2.0 HDi	130 100 - 103	11/04→07/08 11/04→07/11		Orga 11578→	2	**11.8171-0008.1**	**990049**	ATE
			←	→Orga 10487	2	**11.8171-0008.1**	**990049**	ATE
			←	10488→ 11577	2	**11.8171-0008.1**	**990049**	ATE
Brake Pad Set, disc brake								
1.4 16V 1.6 HDi	65 66	11/04→07/11 11/04→07/11	←	- ESP		**13.0460-3994.2** **13.0470-3994.2**	**603994** **LD3994**	BOS 23599 19,0 - WE / - WK + Zub BOS 23599 19,0 - WE / - WK + Zub Ceramic
			←	Orga 10551→; + ESP		**13.0460-3994.2** **13.0470-3994.2**	**603994** **LD3994**	BOS 23599 19,0 - WE / - WK + Zub BOS 23599 19,0 - WE / - WK + Zub Ceramic
1.6 16V 1.6 16V Bio-Flex	80 80	11/04→07/11 09/07→07/08	←	- ESP; Manual Transmission		**13.0460-3994.2** **13.0470-3994.2**	**603994** **LD3994**	BOS 23599 19,0 - WE / - WK + Zub BOS 23599 19,0 - WE / - WK + Zub Ceramic
			←	Orga 10551→; + ESP; Manual Transmission		**13.0460-3994.2** **13.0470-3994.2**	**603994** **LD3994**	BOS 23599 19,0 - WE / - WK + Zub BOS 23599 19,0 - WE / - WK + Zub Ceramic
1.6 VTi 120	88	07/08→07/11	←	Manual Transmission		**13.0460-3994.2** **13.0470-3994.2**	**603994** **LD3994**	BOS 23599 19,0 - WE / - WK + Zub BOS 23599 19,0 - WE / - WK + Zub Ceramic

	kW				! #			
CITROËN - C4 I (LC_) 11/04→11/14								
Brake Disc								
1.4 16V 1.6 HDi	65 66	11/04→07/11 11/04→07/11	←	- ESP		**24.0122-0194.1**	**422194**	Ø 266 Brake Disc Thickness [mm] 22 Minimum thickness [mm] 20 Vented + S
			←	Orga 10551→; + ESP		**24.0122-0194.1**	**422194**	Ø 266 Brake Disc Thickness [mm] 22 Minimum thickness [mm] 20 Vented + S
1.6 16V 1.6 16V Bio-Flex	80 80	11/04→07/11 09/07→07/08	←	Orga 10551→; + ESP; Manual Transmission		**24.0122-0194.1**	**422194**	Ø 266 Brake Disc Thickness [mm] 22 Minimum thickness [mm] 20 Vented + S
			←	- ESP		**24.0122-0194.1**	**422194**	Ø 266 Brake Disc Thickness [mm] 22 Minimum thickness [mm] 20 Vented + S
1.6 VTi 120	88	07/08→07/11	←	Manual Transmission		**24.0122-0194.1**	**422194**	Ø 266 Brake Disc Thickness [mm] 22 Minimum thickness [mm] 20 Vented + S
CITROËN - C4 I Hatchback Van (LR_) 02/05→12/10								
Spring, brake caliper								
2.0 HDi	100	02/05→12/10		Orga 11578→	2	**11.8116-0356.1**	**390586**	ATE
Guide Bolt, brake caliper								
2.0 HDi	100	02/05→12/10		Orga 11578→	2	**11.8171-0008.1**	**990049**	ATE
			←	→Orga 10487	2	**11.8171-0008.1**	**990049**	ATE
			←	10488→ 11577	2	**11.8171-0008.1**	**990049**	ATE
CITROËN - C4 II (NC_) 02/09→								
Spring, brake caliper								
1.2 THP 130 1.6 1.6 BlueHDi 100 1.6 BlueHDi 115 1.6 BlueHDi 120 1.6 HDi 110 1.6 HDi 115 1.6 THP 155 1.6 VTi 120 1.6 VTi 120 LPG 2.0 HDi / BlueHDi 150 2.0 HDi / BlueHDi 160	96 81 73 85 88 82 84 115 88 88 110 120	04/14→ 01/10→ 07/14→ 08/14→ 02/15→ 11/09→ 07/12→ 11/09→12/16 11/09→12/16 09/11→ 11/09→ 10/10→	←		2	**11.8116-0356.1**	**390586**	ATE
1.6 HDi 90	68	11/09→	←	+ eFSB	2	**11.8116-0356.1**	**390586**	ATE
Guide Bolt, brake caliper								
1.2 THP 130 1.6 1.6 BlueHDi 100 1.6 BlueHDi 115 1.6 BlueHDi 120 1.6 HDi 110 1.6 HDi 115 1.6 THP 155 1.6 VTi 120 1.6 VTi 120 LPG 2.0 HDi / BlueHDi 150 2.0 HDi / BlueHDi 160	96 81 73 85 88 82 84 115 88 88 110 120	04/14→ 01/10→ 07/14→ 08/14→ 02/15→ 11/09→ 07/12→ 11/09→12/16 11/09→12/16 09/11→ 11/09→ 10/10→	←		2	**11.8171-0008.1**	**990049**	ATE
1.6 HDi 90	68	11/09→	←	+ eFSB	2	**11.8171-0008.1**	**990049**	ATE
Brake Disc								
1.2 THP 110 1.4 VTi 95	81 70	02/15→12/17 11/09→	←			**24.0122-0194.1**	**422194**	Ø 266 Brake Disc Thickness [mm] 22 Minimum thickness [mm] 20 Vented + S
1.6 HDi 90	68	11/09→	←	- eFSB		**24.0122-0194.1**	**422194**	Ø 266 Brake Disc Thickness [mm] 22 Minimum thickness [mm] 20 Vented + S
CITROËN - C4 II Hatchback Van (NC_) 11/09→								
Spring, brake caliper								
1.6 BlueHDi	73 - 88	07/14→	←		2	**11.8116-0356.1**	**390586**	ATE

© 2022 Continental Aftermarket & Services GmbH

	kW				! #			
CITROËN - C4 II Hatchback Van (NC_) 11/09→								
Spring, brake caliper								
1.6 HDi	82	11/09→	←		2	**11.8116-0356.1**	**390586**	ATE
1.6 HDi	68	06/10→	←	+ eFSB	2	**11.8116-0356.1**	**390586**	ATE
Guide Bolt, brake caliper								
1.6 BlueHDi 1.6 HDi	73 - 88 82	07/14→ 11/09→	←		2	**11.8171-0008.1**	**990049**	ATE
1.6 HDi	68	06/10→	←	+ eFSB	2	**11.8171-0008.1**	**990049**	ATE
Brake Disc								
1.6 HDi	68	06/10→	←	- eFSB		**24.0122-0194.1**	**422194**	Ø 266 Brake Disc Thickness [mm] 22 Minimum thickness [mm] 20 Vented + S
CITROËN - C4 II Saloon (NC_) 01/13→								
Spring, brake caliper								
1.6 1.6 HDi 1.6 THP	85 - 88 84 110	01/13→ 08/13→ 01/13→	←		2	**11.8116-0356.1**	**390586**	ATE
Guide Bolt, brake caliper								
1.6 1.6 HDi 1.6 THP	85 - 88 84 110	01/13→ 08/13→ 01/13→	←		2	**11.8171-0008.1**	**990049**	ATE
CITROËN - C4 III (BA_, BB_, BC_) 10/20→								
Spring, brake caliper								
1.2 PureTech 100 1.2 PureTech 130 1.2 PureTech 155 1.5 BlueHDi 130 BLUEHDI 110 e-C4	75 96 114 96 81 100	04/21→ 10/20→ 01/21→ 10/20→ 12/20→ 10/20→	←	→Orga 16260	2	**11.8116-0356.1**	**390586**	ATE
Brake Pad Set, disc brake								
e-C4	100	10/20→	→			**13.0460-3871.2** **13.0470-3871.2**	**603871** **LD3871**	BOS 25839 17,8 - WE / - WK + Zub BOS 25839 17,8 - WE / - WK + Zub Ceramic
CITROËN - C4 CACTUS 09/14→								
Brake Pad Set, disc brake								
1.2 PureTech 130 1.2 THP 110 1.2 VTi 75 / PureTech 75 1.2 VTi 82 1.6 BlueHDi 100 1.6 HDi 90	96 81 55 60 73 68	11/17→ 09/14→ 09/14→ 09/14→ 09/14→ 09/14→	←	for brake disc diameter [mm]: 266; Vented		**13.0460-3994.2** **13.0470-3994.2**	**603994** **LD3994**	BOS 23599 19,0 - WE / - WK + Zub BOS 23599 19,0 - WE / - WK + Zub Ceramic
1.5 BlueHDi 100 1.5 BlueHDi 120	73 - 75 88	06/18→ 09/18→	←	for brake disc diameter [mm]: 266		**13.0460-3994.2** **13.0470-3994.2**	**603994** **LD3994**	BOS 23599 19,0 - WE / - WK + Zub BOS 23599 19,0 - WE / - WK + Zub Ceramic
Brake Disc								
1.2 PureTech 130 1.2 THP 110 1.2 VTi 75 / PureTech 75 1.2 VTi 82 1.5 BlueHDi 100 1.5 BlueHDi 120 1.6 BlueHDi 100 1.6 HDi 90	96 81 55 60 73 - 75 88 73 68	11/17→ 09/14→ 09/14→ 09/14→ 06/18→ 09/18→ 09/14→ 09/14→	←			**24.0122-0194.1**	**422194**	Ø 266 Brake Disc Thickness [mm] 22 Minimum thickness [mm] 20 Vented + S
Wheel Brake Cylinder								
1.2 PureTech 130 1.2 THP 110 1.2 VTi 75 / PureTech 75 1.2 VTi 82 1.6 BlueHDi 100 1.6 HDi 90	96 81 55 60 73 68	11/17→ 09/14→ 09/14→ 09/14→ 09/14→ 09/14→	→	Orga 15050→; for facelift	2	**24.3220-1743.3**	**020556**	ALU

	kW				! #			
CITROËN - C4 CACTUS 09/14→								
Wheel Brake Cylinder								
1.5 BlueHDi 100 1.5 BlueHDi 120	73 - 75 88	06/18→ 09/18→			2	**24.3220-1743.3**	**020556**	ALU
CITROËN - C4 CACTUS Van (0B_, 0P_) 09/14→								
Brake Pad Set, disc brake								
BlueHDi 100	73	05/19→		for brake disc diameter [mm]: 266		**13.0460-3994.2** **13.0470-3994.2**	**603994** **LD3994**	BOS 23599 19,0 - WE / - WK + Zub BOS 23599 19,0 - WE / - WK + Zub Ceramic
BlueHDi 100 PureTech 110 PureTech 130 PureTech 82	73 81 96 60	05/19→ 05/19→ 05/19→ 05/19→		for brake disc diameter [mm]: 266; Vented		**13.0460-3994.2** **13.0470-3994.2**	**603994** **LD3994**	BOS 23599 19,0 - WE / - WK + Zub BOS 23599 19,0 - WE / - WK + Zub Ceramic
Brake Disc								
BlueHDi 100 PureTech 110 PureTech 130 PureTech 82	73 81 96 60	05/19→ 05/19→ 05/19→ 05/19→				**24.0122-0194.1**	**422194**	Ø 266 Brake Disc Thickness [mm] 22 Minimum thickness [mm] 20 Vented + S
Wheel Brake Cylinder								
BlueHDi 100	73	05/19→			2	**24.3220-1743.3**	**020556**	ALU
BlueHDi 100 PureTech 110 PureTech 130 PureTech 82	73 81 96 60	05/19→ 05/19→ 05/19→ 05/19→		Orga 15050→; for facelift	2	**24.3220-1743.3**	**020556**	ALU
CITROËN - C4 Coupe (LA_) 11/04→12/13								
Spring, brake caliper								
2.0 16V 2.0 HDi	130 100 - 103	11/04→12/10 11/04→07/11		Orga 11578→; → 07/10	2	**11.8116-0356.1**	**390586**	ATE
Guide Bolt, brake caliper								
2.0 16V 2.0 HDi	130 100 - 103	11/04→12/10 11/04→07/11		Orga 11578→; → 07/10	2	**11.8171-0008.1**	**990049**	ATE
				10488→ 11577	2	**11.8171-0008.1**	**990049**	ATE
				→Orga 10487	2	**11.8171-0008.1**	**990049**	ATE
Brake Pad Set, disc brake								
1.4 16V 1.6 HDi	65 66	11/04→07/11 11/04→07/11		→ 07/10; - ESP		**13.0460-3994.2** **13.0470-3994.2**	**603994** **LD3994**	BOS 23599 19,0 - WE / - WK + Zub BOS 23599 19,0 - WE / - WK + Zub Ceramic
				Orga 10551→; → 07/10; + ESP		**13.0460-3994.2** **13.0470-3994.2**	**603994** **LD3994**	BOS 23599 19,0 - WE / - WK + Zub BOS 23599 19,0 - WE / - WK + Zub Ceramic
1.6 16V	80	11/04→07/11		→ 07/10; - ESP; Manual Transmission		**13.0460-3994.2** **13.0470-3994.2**	**603994** **LD3994**	BOS 23599 19,0 - WE / - WK + Zub BOS 23599 19,0 - WE / - WK + Zub Ceramic
				Orga 10551→; → 07/10; + ESP; Manual Transmission		**13.0460-3994.2** **13.0470-3994.2**	**603994** **LD3994**	BOS 23599 19,0 - WE / - WK + Zub BOS 23599 19,0 - WE / - WK + Zub Ceramic
1.6 VTi 120	88	07/08→07/11		→ 07/10; Manual Transmission		**13.0460-3994.2** **13.0470-3994.2**	**603994** **LD3994**	BOS 23599 19,0 - WE / - WK + Zub BOS 23599 19,0 - WE / - WK + Zub Ceramic
Brake Disc								
1.4 16V 1.6 HDi	65 66	11/04→07/11 11/04→07/11		→ 07/10; - ESP		**24.0122-0194.1**	**422194**	Ø 266 Brake Disc Thickness [mm] 22 Minimum thickness [mm] 20 Vented + S
				Orga 10551→; → 07/10; + ESP		**24.0122-0194.1**	**422194**	Ø 266 Brake Disc Thickness [mm] 22 Minimum thickness [mm] 20 Vented + S

© 2022 Continental Aftermarket & Services GmbH

	kW				! #			
CITROËN - C4 Coupe (LA_) 11/04→12/13								
Brake Disc								
1.6 16V	80	11/04→07/11	←	→ 07/10; - ESP; Manual Transmission		**24.0122-0194.1**	**422194**	Ø 266 Brake Disc Thickness [mm] 22 Minimum thickness [mm] 20 Vented + S
			←	Orga 10551→; → 07/10; + ESP; Manual Transmission		**24.0122-0194.1**	**422194**	Ø 266 Brake Disc Thickness [mm] 22 Minimum thickness [mm] 20 Vented + S
1.6 VTi 120	88	07/08→07/11	←	→ 07/10; Manual Transmission		**24.0122-0194.1**	**422194**	Ø 266 Brake Disc Thickness [mm] 22 Minimum thickness [mm] 20 Vented + S
CITROËN - C4 GRAND PICASSO I (UA_) 10/06→12/13								
Spring, brake caliper								
1.6 16V	103	07/08→12/10		Orga 11921→	2	**11.8116-0356.1**	**390586**	ATE
			←	→Orga 11920	2	**11.8116-0356.1**	**390586**	ATE
1.6 16V 2.0 HDi 138 2.0 i 16V	110 100 103 - 105	10/08→08/13 10/06→12/13 10/06→08/13		Orga 11921→; → 07/13	2	**11.8116-0356.1**	**390586**	ATE
			←	→Orga 11920	2	**11.8116-0356.1**	**390586**	ATE
1.6 HDi 1.8 i 16V 1.8 i 16V CNG 1.8 i 16V Flex	80 92 86 86	10/06→06/11 10/06→12/10 03/09→12/11 06/09→01/13		Orga 11767→	2	**11.8116-0356.1**	**390586**	ATE
			←	→Orga 11766	2	**11.8116-0356.1**	**390586**	ATE
1.6 HDi 110 2.0 HDi 150	82 110	09/10→08/13 07/09→08/13		→ 07/13	2	**11.8116-0356.1**	**390586**	ATE
1.6 THP 155 2.0 HDi 165	115 120	09/10→08/13 09/10→08/13		11/10→ 07/13	2	**11.8116-0356.1**	**390586**	ATE
1.6 VTi 120	88	07/08→08/13		Orga 11767→; → 07/13	2	**11.8116-0356.1**	**390586**	ATE
			←	→Orga 11766	2	**11.8116-0356.1**	**390586**	ATE
Guide Bolt, brake caliper								
1.6 16V	103	07/08→12/10		Orga 11921→	2	**11.8171-0008.1**	**990049**	ATE
			←	→Orga 11920	2	**11.8171-0008.1**	**990049**	ATE
1.6 16V 2.0 HDi 138 2.0 i 16V	110 100 103 - 105	10/08→08/13 10/06→12/13 10/06→08/13		Orga 11921→; → 07/13	2	**11.8171-0008.1**	**990049**	ATE
			←	→Orga 11920	2	**11.8171-0008.1**	**990049**	ATE
1.6 HDi 1.8 i 16V 1.8 i 16V CNG 1.8 i 16V Flex	80 92 86 86	10/06→06/11 10/06→12/10 03/09→12/11 06/09→01/13		Orga 11767→	2	**11.8171-0008.1**	**990049**	ATE
			←	→Orga 11766	2	**11.8171-0008.1**	**990049**	ATE
1.6 HDi 110 2.0 HDi 150	82 110	09/10→08/13 07/09→08/13		→ 07/13	2	**11.8171-0008.1**	**990049**	ATE
1.6 THP 155 2.0 HDi 165	115 120	09/10→08/13 09/10→08/13		11/10→ 07/13	2	**11.8171-0008.1**	**990049**	ATE
1.6 VTi 120	88	07/08→08/13		Orga 11767→; → 07/13	2	**11.8171-0008.1**	**990049**	ATE
			←	→Orga 11766	2	**11.8171-0008.1**	**990049**	ATE
CITROËN - C4 GRAND PICASSO II (DA_, DE_) 06/13→								
Guide Bolt, brake caliper								
1.2 THP 130 1.6 BlueHDi 100 1.6 BlueHDi 120 1.6 HDi / BlueHDi 115 1.6 HDi 90 1.6 THP 150 1.6 THP 155 1.6 THP 165 1.6 VTi 120 2.0 BlueHDi 135 2.0 BlueHDi 150	96 73 88 85 68 110 115 121 88 100 110	04/14→ 01/15→ 07/14→ 09/13→ 09/13→ 09/14→ 09/13→ 07/14→ 09/13→ 09/13→ 06/13→	←	for brake disc diameter [mm]: 283 / 304	2	**11.8171-0008.1**	**990049**	ATE
Brake Pad Set, disc brake								
1.2 THP 130 1.6 BlueHDi 100 1.6 BlueHDi 120 1.6 HDi / BlueHDi 115 1.6 HDi 90 1.6 THP 150 1.6 THP 155 1.6 THP 165 1.6 VTi 120 2.0 BlueHDi 135 2.0 BlueHDi 150	96 73 88 85 68 110 115 121 88 100 110	04/14→ 01/15→ 07/14→ 09/13→ 09/13→ 09/14→ 09/13→ 07/14→ 09/13→ 09/13→ 06/13→	→	for brake disc diameter [mm]: 268		**13.0460-3871.2** **13.0470-3871.2**	**603871** **LD3871**	BOS 25839 17,8 - WE / - WK + Zub BOS 25839 17,8 - WE / - WK + Zub Ceramic

	kW				! #			
CITROËN - C4 PICASSO I MPV (UD_) 10/06→12/15								
Spring, brake caliper								
1.6 16V 1.6 THP 140 2.0 i 16V	110 103 103	07/08→08/13 07/08→08/13 09/07→08/13		Orga 11921→; → 07/13	2	**11.8116-0356.1**	**390586**	ATE
			←	→Orga 11920	2	**11.8116-0356.1**	**390586**	ATE
1.6 HDi 1.6 VTi 120	80 88	02/07→08/13 07/08→08/13		Orga 11767→; → 07/13	2	**11.8116-0356.1**	**390586**	ATE
			←	→Orga 11766	2	**11.8116-0356.1**	**390586**	ATE
1.6 HDi 110 1.6 THP 155 2.0 HDi 165	82 115 120	09/10→08/13 09/10→08/13 09/10→08/13		11/10→ 07/13	2	**11.8116-0356.1**	**390586**	ATE
1.8 Bifuel 1.8 i 16V	92 92	01/09→10/12 02/07→12/11		Orga 11767→	2	**11.8116-0356.1**	**390586**	ATE
			←	→Orga 11766	2	**11.8116-0356.1**	**390586**	ATE
2.0 HDi 138	100	10/06→08/13		Orga 11921→; → 07/13	2	**11.8116-0356.1**	**390586**	ATE
			←	02/07→; →Orga 11920	2	**11.8116-0356.1**	**390586**	ATE
2.0 HDi 150	110	07/09→08/13		→ 07/13	2	**11.8116-0356.1**	**390586**	ATE
2.0 i 16V	105	05/08→05/13		Orga 11921→	2	**11.8116-0356.1**	**390586**	ATE
			←	→Orga 11920	2	**11.8116-0356.1**	**390586**	ATE
Guide Bolt, brake caliper								
1.6 16V 1.6 THP 140 2.0 i 16V	110 103 103	07/08→08/13 07/08→08/13 09/07→08/13		Orga 11921→; → 07/13	2	**11.8171-0008.1**	**990049**	ATE
			←	→Orga 11920	2	**11.8171-0008.1**	**990049**	ATE
1.6 HDi 1.6 VTi 120	80 88	02/07→08/13 07/08→08/13		Orga 11767→; → 07/13	2	**11.8171-0008.1**	**990049**	ATE
			←	→Orga 11766	2	**11.8171-0008.1**	**990049**	ATE
1.6 HDi 110 1.6 THP 155 2.0 HDi 165	82 115 120	09/10→08/13 09/10→08/13 09/10→08/13		11/10→ 07/13	2	**11.8171-0008.1**	**990049**	ATE
1.8 Bifuel 1.8 i 16V	92 92	01/09→10/12 02/07→12/11		Orga 11767→	2	**11.8171-0008.1**	**990049**	ATE
			←	→Orga 11766	2	**11.8171-0008.1**	**990049**	ATE
2.0 HDi 138	100	10/06→08/13		Orga 11921→; → 07/13	2	**11.8171-0008.1**	**990049**	ATE
			←	02/07→; →Orga 11920	2	**11.8171-0008.1**	**990049**	ATE
2.0 HDi 150	110	07/09→08/13		→ 07/13	2	**11.8171-0008.1**	**990049**	ATE
2.0 i 16V	105	05/08→05/13		Orga 11921→	2	**11.8171-0008.1**	**990049**	ATE
			←	→Orga 11920	2	**11.8171-0008.1**	**990049**	ATE
CITROËN - C4 PICASSO II 01/13→								
Guide Bolt, brake caliper								
1.2 THP 110 1.2 THP 130 1.6 BlueHDi 100 1.6 BlueHDi 120 1.6 HDi / BlueHDi 115 1.6 HDi 90 1.6 THP 150 1.6 THP 155 1.6 THP 165 1.6 VTi 120 2.0 BlueHDi 135 2.0 BlueHDi 150	81 96 73 88 85 68 110 115 121 88 100 110	04/16→ 04/14→ 12/14→ 07/14→ 02/13→ 02/13→ 09/14→ 02/13→ 07/14→ 02/13→ 09/13→ 09/13→	←	for brake disc diameter [mm]: 283 / 304	2	**11.8171-0008.1**	**990049**	ATE
Brake Pad Set, disc brake								
1.2 THP 110 1.2 THP 130 1.6 BlueHDi 100 1.6 BlueHDi 120 1.6 THP 150 1.6 THP 165 1.6 VTi 120 2.0 BlueHDi 135 2.0 BlueHDi 150	81 96 73 88 110 121 88 100 110	04/16→ 04/14→ 12/14→ 07/14→ 09/14→ 07/14→ 02/13→ 09/13→ 09/13→	→	for brake disc diameter [mm]: 268		**13.0460-3871.2** **13.0470-3871.2**	**603871** **LD3871**	BOS 25839 17,8 - WE / - WK + Zub BOS 25839 17,8 - WE / - WK + Zub Ceramic
1.6 HDi / BlueHDi 115 1.6 HDi 90 1.6 THP 155	85 68 115	02/13→ 02/13→ 02/13→	→	06/13→; for brake disc diameter [mm]: 268		**13.0460-3871.2** **13.0470-3871.2**	**603871** **LD3871**	BOS 25839 17,8 - WE / - WK + Zub BOS 25839 17,8 - WE / - WK + Zub Ceramic
CITROËN - C4 PICASSO II Van (DD_) 01/13→								
Guide Bolt, brake caliper								
BlueHDi 150 e-HDi HDi / e-HDi THP 155 VTi 120	110 85 68 115 88	09/13→ 02/13→ 02/13→ 02/13→ 02/13→	←	for brake disc diameter [mm]: 283 / 304	2	**11.8171-0008.1**	**990049**	ATE

© 2022 Continental Aftermarket & Services GmbH

	kW				! #			
CITROËN - C4 PICASSO II Van (DD_) 01/13→								
Brake Pad Set, disc brake								
BlueHDi 150 e-HDi HDi / e-HDi THP 155 VTi 120	110 85 68 115 88	09/13→ 02/13→ 02/13→ 02/13→ 02/13→	➡	for brake disc diameter [mm]: 268		**13.0460-3871.2** **13.0470-3871.2**	**603871** **LD3871**	BOS 25839 17,8 - WE / - WK + Zub BOS 25839 17,8 - WE / - WK + Zub Ceramic
CITROËN - C4 SPACETOURER (3D_) 04/18→								
Guide Bolt, brake caliper								
1.2 PureTech 110 1.2 PureTech 130 1.5 BlueHDi 130 1.6 BlueHDi 100 1.6 BlueHDi 120 1.6 THP 165 2.0 BlueHDi 150 2.0 BlueHDi 160	81 96 96 73 88 121 110 120	04/18→ 04/18→ 05/18→ 04/18→ 04/18→ 04/18→ 04/18→ 04/18→	⬅	for brake disc diameter [mm]: 283 / 304	2	**11.8171-0008.1**	**990049**	ATE
Brake Pad Set, disc brake								
1.2 PureTech 110 1.2 PureTech 130	81 96	04/18→ 04/18→	⬅	for brake disc diameter [mm]: 304; Orga 15365→		**13.0460-7339.2**	**607339**	ATE + WE / - WK
1.5 BlueHDi 130 1.6 BlueHDi 100 1.6 BlueHDi 120 1.6 THP 165 2.0 BlueHDi 150 2.0 BlueHDi 160	96 73 88 121 110 120	05/18→ 04/18→ 04/18→ 04/18→ 04/18→ 04/18→	➡	for brake disc diameter [mm]: 268		**13.0460-3871.2** **13.0470-3871.2**	**603871** **LD3871**	BOS 25839 17,8 - WE / - WK + Zub BOS 25839 17,8 - WE / - WK + Zub Ceramic
CITROËN - C4 SPACETOURER Van (3D_) 04/18→								
Guide Bolt, brake caliper								
BlueHDi 120 BlueHDi 130 PureTech 130	88 96 96	05/19→ 05/19→ 05/19→	⬅	for brake disc diameter [mm]: 283 / 304	2	**11.8171-0008.1**	**990049**	ATE
Brake Pad Set, disc brake								
BlueHDi 120 BlueHDi 130 PureTech 130	88 96 96	05/19→ 05/19→ 05/19→	⬅	for brake disc diameter [mm]: 304; Orga 15365→		**13.0460-7339.2**	**607339**	ATE + WE / - WK
			➡	for brake disc diameter [mm]: 268		**13.0460-3871.2** **13.0470-3871.2**	**603871** **LD3871**	BOS 25839 17,8 - WE / - WK + Zub BOS 25839 17,8 - WE / - WK + Zub Ceramic
CITROËN - C5 I (DC_) 03/01→03/05								
Brake Disc								
1.8 16V	85	03/01→08/04	⬅			**24.0122-0194.1**	**422194**	Ø 266 Brake Disc Thickness [mm] 22 Minimum thickness [mm] 20 Vented + S
CITROËN - C5 II (RC_) 08/04→								
Brake Disc								
1.8 16V	92	09/05→	⬅	→ 01/08		**24.0122-0194.1**	**422194**	Ø 266 Brake Disc Thickness [mm] 22 Minimum thickness [mm] 20 Vented + S
1.8 16V	85	09/04→08/05	⬅			**24.0122-0194.1**	**422194**	Ø 266 Brake Disc Thickness [mm] 22 Minimum thickness [mm] 20 Vented + S
CITROËN - C5 III (RD_) 02/08→								
Spring, brake caliper								
1.6	120	03/11→	⬅	Orga 12999→	2	**11.8116-0356.1**	**390586**	ATE
1.6 HDi 110 1.6 HDi 115 1.6 THP 150 1.6 THP 155 1.6 VTi 120 1.8 16V 2.0 16V 2.0 16V BioFlex 2.0 HDi 2.0 HDi 140 2.0 HDi 165	80 - 82 84 110 115 88 92 103 103 100 - 101 103 120	02/08→ 01/12→ 07/10→ 04/09→ 07/10→ 02/08→ 02/08→ 02/08→ 02/08→ 11/08→ 04/09→	⬅	→Orga 12998	2	**11.8116-0356.1**	**390586**	ATE

	kW				! #			
CITROËN - C5 III (RD_) 02/08→								
Spring, brake caliper								
2.0 HDi 150 / BlueHDi 150	110	04/09→	←	05/15→	2	**11.8116-0356.1**	**390586**	ATE
Guide Bolt, brake caliper								
1.6	120	03/11→	←	Orga 12999→	2	**11.8171-0008.1**	**990049**	ATE
1.6 HDi 110	80 - 82	02/08→	←	→Orga 12998	2	**11.8171-0008.1**	**990049**	ATE
1.6 HDi 115	84	01/12→	→	+ eFSB	2	**11.8171-0008.1**	**990049**	ATE
1.6 THP 150	110	07/10→						
1.6 THP 155	115	04/09→						
1.6 VTi 120	88	07/10→						
1.8 16V	92	02/08→						
2.0 16V	103	02/08→						
2.0 16V BioFlex	103	02/08→						
2.0 HDi	100 - 101	02/08→						
2.0 HDi 140	103	11/08→						
2.0 HDi 165	120	04/09→						
2.0 HDi 150 / BlueHDi 150	110	04/09→	←	05/15→	2	**11.8171-0008.1**	**990049**	ATE
			→	05/15→; + eFSB	2	**11.8171-0008.1**	**990049**	ATE
2.0 HDi 180	133	03/15→			2	**11.8171-0008.1**	**990049**	ATE
			→	+ eFSB	2	**11.8171-0008.1**	**990049**	ATE
2.2 HDi	120 - 125	02/08→	→	+ eFSB	2	**11.8171-0008.1**	**990049**	ATE
2.7 HDi	150	02/08→						
3.0 V6	155	02/08→						
2.2 HDi 200	150	07/10→		→Orga 12774	2	**11.8171-0008.1**	**990049**	ATE
3.0 HDi 240	177	04/09→10/14	→	+ eFSB	2	**11.8171-0008.1**	**990049**	ATE
CITROËN - C5 III Break (RW_) 02/08→								
Spring, brake caliper								
1.6 HDi 110	80 - 82	02/08→	←	Orga 12999→	2	**11.8116-0356.1**	**390586**	ATE
1.6 HDi 115	84	01/12→	←	→Orga 12998	2	**11.8116-0356.1**	**390586**	ATE
1.6 THP 150	110	04/09→						
1.6 THP 155	115	04/09→						
1.6 VTI 120	88	07/10→						
1.8 16V	92	02/08→						
2.0 16V	103	02/08→						
2.0 16V BioFlex	103	02/08→						
2.0 HDi	100	02/08→						
2.0 HDi 140	103	04/09→						
2.0 HDi 150 / BlueHDi 150	110	04/09→						
2.0 HDi 165	120	04/09→						
Guide Bolt, brake caliper								
1.6 HDi 110	80 - 82	02/08→	←	Orga 12999→	2	**11.8171-0008.1**	**990049**	ATE
1.6 HDi 115	84	01/12→	←	→Orga 12998	2	**11.8171-0008.1**	**990049**	ATE
1.6 THP 150	110	04/09→	→	+ eFSB	2	**11.8171-0008.1**	**990049**	ATE
1.6 THP 155	115	04/09→						
1.6 VTI 120	88	07/10→						
1.8 16V	92	02/08→						
2.0 16V	103	02/08→						
2.0 16V BioFlex	103	02/08→						
2.0 HDi	100	02/08→						
2.0 HDi 140	103	04/09→						
2.0 HDi 150 / BlueHDi 150	110	04/09→						
2.0 HDi 165	120	04/09→						
2.0 HDi 180	133	03/15→			2	**11.8171-0008.1**	**990049**	ATE
2.2 HDi 200	150	07/10→	→	+ eFSB	2	**11.8171-0008.1**	**990049**	ATE
3.0 HDi 240	177	04/09→10/14						
2.2 HDi	125	02/08→	→	+ eFSB	2	**11.8171-0008.1**	**990049**	ATE
2.2 HDi 165	120	02/08→						
2.7 HDi	150	02/08→						
3.0 V6	155	02/08→						
CITROËN - C5 AIRCROSS 11/18→								
Guide Bolt, brake caliper								
1.2 PureTech 130	96	11/18→	←	for brake disc diameter [mm]: 304; →Orga 16354	2	**11.8171-0008.1**	**990049**	ATE
1.5 BlueHDi 130	96	11/18→						
1.6 Hybrid	133 - 165	04/20→						
1.6 PureTech 180	133	11/18→						
1.6 THP 150	110	09/19→						
1.6 THP 165	121	05/19→						
2.0 BlueHDi 180	130	11/18→						

© 2022 Continental Aftermarket & Services GmbH

	kW				! #			
CITROËN - C5 AIRCROSS 11/18→								
Brake Pad Set, disc brake								
1.2 PureTech 130 1.5 BlueHDi 130 1.6 Hybrid 1.6 PureTech 180 1.6 THP 150 1.6 THP 165 2.0 BlueHDi 180	96 96 133 - 165 133 110 121 130	11/18→ 11/18→ 04/20→ 11/18→ 09/19→ 05/19→ 11/18→	←	for brake disc diameter [mm]: 304; →Orga 16354		**13.0460-7339.2**	**607339**	ATE + WE / - WK
CITROËN - C6 (TD_) 09/05→12/12								
Guide Bolt, brake caliper								
3.0 HDi	155	06/09→12/10			2	**11.8171-0008.1**	**990049**	ATE
3.0 HDi	177	04/09→12/12		07/09→	2	**11.8171-0008.1**	**990049**	ATE
CITROËN - C-ELYSEE (DD_) 11/12→								
Brake Pad Set, disc brake								
1.2 PureTech 82 1.2 VTi 72 1.2 VTi 82 1.5 BlueHDi 100 1.6 BlueHDi 100 1.6 HDI 92 1.6 VTi 115	61 53 60 75 73 68 85	02/18→ 11/12→ 12/14→ 05/18→ 11/14→ 11/12→ 11/12→	←	Vented		**13.0460-3994.2** **13.0470-3994.2**	**603994** **LD3994**	BOS 23599 19,0 - WE / - WK + Zub BOS 23599 19,0 - WE / - WK + Zub Ceramic
Brake Disc								
1.2 PureTech 82 1.2 VTi 72 1.2 VTi 82 1.5 BlueHDi 100 1.6 BlueHDi 100 1.6 HDI 92 1.6 VTi 115	61 53 60 75 73 68 85	02/18→ 11/12→ 12/14→ 05/18→ 11/14→ 11/12→ 11/12→	←			**24.0122-0194.1**	**422194**	Ø 266 Brake Disc Thickness [mm] 22 Minimum thickness [mm] 20 Vented + S
Wheel Brake Cylinder								
1.2 PureTech 82 1.5 BlueHDi 100	61 75	02/18→ 05/18→	→	Inner Br. Drum Diam. [in]: 8	2	**24.3220-1743.3**	**020556**	ALU
1.2 VTi 72 1.2 VTi 82 1.6 BlueHDi 100 1.6 HDI 92 1.6 VTi 115	53 60 73 68 85	11/12→ 12/14→ 11/14→ 11/12→ 11/12→	→	Orga 14693→; Inner Br. Drum Diam. [in]: 8	2	**24.3220-1743.3**	**020556**	ALU
			→	→Orga 14692; + ABS	2	**24.3220-1743.3**	**020556**	ALU
Accessory Kit, brake shoes								
1.2 PureTech 82 1.2 VTi 72 1.2 VTi 82 1.5 BlueHDi 100 1.6 BlueHDi 100 1.6 HDI 92 1.6 VTi 115	61 53 60 75 73 68 85	02/18→ 11/12→ 12/14→ 05/18→ 11/14→ 11/12→ 11/12→	→	Inner Br. Drum Diam. [in]: 9		**03.0137-9228.2**	**669228**	BDX
CITROËN - DS3 (SA_) 11/09→12/16								
Brake Pad Set, disc brake								
1.2 THP 110 1.6 BlueHDi 100 1.6 BlueHDi 75 1.6 HDi 110 1.6 HDi 115 1.6 HDi 90 1.6 THP 165 1.6 VTi 120	81 73 55 82 84 68 121 88	10/14→03/15 07/14→07/15 03/15→07/15 11/09→07/15 08/12→07/15 11/09→07/15 10/14→06/15 04/10→07/15	←	for brake disc diameter [mm]: 266		**13.0460-3994.2** **13.0470-3994.2**	**603994** **LD3994**	BOS 23599 19,0 - WE / - WK + Zub BOS 23599 19,0 - WE / - WK + Zub Ceramic
1.2 VTi 82 1.4 HDi 70 1.4 VTi 95 1.4 VTi 95 LPG	60 50 70 70	01/13→03/15 04/10→07/15 04/10→07/15 08/12→07/15	←			**13.0460-3994.2** **13.0470-3994.2**	**603994** **LD3994**	BOS 23599 19,0 - WE / - WK + Zub BOS 23599 19,0 - WE / - WK + Zub Ceramic
1.4 VTi 98	72	11/09→07/15	←	04/10→		**13.0460-3994.2** **13.0470-3994.2**	**603994** **LD3994**	BOS 23599 19,0 - WE / - WK + Zub BOS 23599 19,0 - WE / - WK + Zub Ceramic
1.6 THP160	120	01/12→07/15	←	10/14→; for brake disc diameter [mm]: 266		**13.0460-3994.2** **13.0470-3994.2**	**603994** **LD3994**	BOS 23599 19,0 - WE / - WK + Zub BOS 23599 19,0 - WE / - WK + Zub Ceramic

	kW				! #			
CITROËN - DS3 (SA_) 11/09→12/16								
Brake Disc								
1.2 THP 110 1.2 VTi 82 1.4 HDi 70 1.4 VTi 95 1.4 VTi 95 LPG 1.6 BlueHDi 100 1.6 BlueHDi 75 1.6 HDi 110 1.6 HDi 115 1.6 HDi 90 1.6 THP 165 1.6 VTi 120	81 60 50 70 70 73 55 82 84 68 121 88	10/14→03/15 01/13→03/15 04/10→07/15 04/10→07/15 08/12→07/15 07/14→07/15 03/15→07/15 11/09→07/15 08/12→07/15 11/09→07/15 10/14→06/15 04/10→07/15	←			**24.0122-0194.1**	**422194**	Ø 266 Brake Disc Thickness [mm] 22 Minimum thickness [mm] 20 Vented + S
1.4 VTi 98	72	11/09→07/15	←	04/10→		**24.0122-0194.1**	**422194**	Ø 266 Brake Disc Thickness [mm] 22 Minimum thickness [mm] 20 Vented + S
1.6 THP160	120	01/12→07/15	←	10/14→		**24.0122-0194.1**	**422194**	Ø 266 Brake Disc Thickness [mm] 22 Minimum thickness [mm] 20 Vented + S
Accessory Kit, brake shoes								
1.2 THP 110 1.4 VTi 95 1.4 VTi 95 LPG 1.6 BlueHDi 75	81 70 70 55	10/14→03/15 04/10→07/15 08/12→07/15 03/15→07/15	→			**03.0137-9228.2**	**669228**	BDX
1.4 VTi 98	72	11/09→07/15	→	04/10→		**03.0137-9228.2**	**669228**	BDX
1.6 HDi 90	68	11/09→07/15	→	Inner Br. Drum Diam. [in]: 9		**03.0137-9228.2**	**669228**	BDX
CITROËN - DS3 Convertible 01/13→07/15								
Brake Pad Set, disc brake								
1.2 THP 110 1.6 BlueHDi 100 1.6 BlueHDi 115 1.6 THP 165	81 73 - 75 85 120 - 121	10/14→07/15 07/14→07/15 10/13→07/15 10/14→07/15	←	for brake disc diameter [mm]: 266		**13.0460-3994.2** **13.0470-3994.2**	**603994** **LD3994**	BOS 23599 19,0 - WE / - WK + Zub BOS 23599 19,0 - WE / - WK + Zub Ceramic
1.2 VTi 82	60	01/13→07/15	←	03/13→		**13.0460-3994.2** **13.0470-3994.2**	**603994** **LD3994**	BOS 23599 19,0 - WE / - WK + Zub BOS 23599 19,0 - WE / - WK + Zub Ceramic
1.6 HDi 90	68	01/13→07/15	←	03/13→; for brake disc diameter [mm]: 266		**13.0460-3994.2** **13.0470-3994.2**	**603994** **LD3994**	BOS 23599 19,0 - WE / - WK + Zub BOS 23599 19,0 - WE / - WK + Zub Ceramic
Brake Disc								
1.2 THP 110 1.6 BlueHDi 100 1.6 BlueHDi 115 1.6 THP 165	81 73 - 75 85 120 - 121	10/14→07/15 07/14→07/15 10/13→07/15 10/14→07/15	←			**24.0122-0194.1**	**422194**	Ø 266 Brake Disc Thickness [mm] 22 Minimum thickness [mm] 20 Vented + S
1.2 VTi 82 1.6 HDi 90	60 68	01/13→07/15 01/13→07/15	←	03/13→		**24.0122-0194.1**	**422194**	Ø 266 Brake Disc Thickness [mm] 22 Minimum thickness [mm] 20 Vented + S
Accessory Kit, brake shoes								
1.6 BlueHDi 115	85	10/13→07/15	→			**03.0137-9228.2**	**669228**	BDX
1.6 HDi 90	68	01/13→07/15	→	Inner Br. Drum Diam. [in]: 9		**03.0137-9228.2**	**669228**	BDX
CITROËN - DS4 (NX_) 03/11→07/15								
Spring, brake caliper								
1.2 THP 130 1.6 BlueHDi 120 1.6 HDi 110 1.6 HDi 115 1.6 HDi 90 1.6 THP 150 1.6 THP 155 1.6 THP 160 1.6 THP 165 1.6 VTi 120 2.0 BlueHDi 150	96 88 82 84 68 110 115 120 121 88 110	07/14→07/15 07/14→07/15 04/11→07/15 08/12→07/15 05/11→07/15 04/11→07/15 04/11→07/15 04/12→07/15 01/12→07/15 04/11→07/15 07/14→07/15	←		2	**11.8116-0356.1**	**390586**	ATE
1.6 BlueHDi 115	85	07/14→07/15	←	08/14→	2	**11.8116-0356.1**	**390586**	ATE

© 2022 Continental Aftermarket & Services GmbH

	kW				! #			
CITROËN - DS4 (NX_) 03/11→07/15								
Spring, brake caliper								
2.0 BlueHDi 180 2.0 HDi / BlueHDi 135 2.0 HDi 165	133 100 120	07/14→07/15 09/11→07/15 04/11→07/15		not for rim size [in]: 19	2	**11.8116-0356.1**	**390586**	ATE
Guide Bolt, brake caliper								
1.2 THP 130 1.6 BlueHDi 120 1.6 HDi 110 1.6 HDi 115 1.6 HDi 90 1.6 THP 150 1.6 THP 155 1.6 THP 160 1.6 THP 165 1.6 THP 200 1.6 VTi 120 2.0 BlueHDi 150	96 88 82 84 68 110 115 120 121 147 88 110	07/14→07/15 07/14→07/15 04/11→07/15 08/12→07/15 05/11→07/15 04/11→07/15 04/11→07/15 04/12→07/15 01/12→07/15 04/11→07/15 04/11→07/15 07/14→07/15			2	**11.8171-0008.1**	**990049**	ATE
1.6 BlueHDi 115	85	07/14→07/15		08/14→	2	**11.8171-0008.1**	**990049**	ATE
2.0 BlueHDi 180	133	07/14→07/15		Rim Size [in]: 19	2	**11.8171-0008.1**	**990049**	ATE
2.0 HDi / BlueHDi 135 2.0 HDi 165	100 120	09/11→07/15 04/11→07/15		not for rim size [in]: 19	2	**11.8171-0008.1**	**990049**	ATE
CITROËN - DS5 09/11→07/15								
Spring, brake caliper								
1.6 BlueHDi 120 1.6 HDi 1.6 THP 150 1.6 THP 155 1.6 THP 165 1.6 THP 165 Hybrid 1.6 THP 200 2.0 BlueHDi 150 2.0 BlueHDi 180 2.0 HDi 135 2.0 HDi 165 2.0 HDi 165 Hybrid4 4x4 2.0 HDi 200 Hybrid4 All-wheel Drive	88 85 110 115 121 121 147 110 133 100 120 120 147	07/14→07/15 11/13→07/15 11/11→07/15 11/11→07/15 01/12→07/15 06/12→07/15 11/11→07/15 07/14→07/15 08/13→07/15 11/11→07/15 11/11→07/15 12/11→07/15 12/11→07/15			2	**11.8116-0356.1**	**390586**	ATE
1.6 HDi 110	82	11/11→07/15		Orga 13343→	2	**11.8116-0356.1**	**390586**	ATE
				→Orga 13342	2	**11.8116-0356.1**	**390586**	ATE
1.6 HDi 115	84	06/12→07/15		Orga 13343→	2	**11.8116-0356.1**	**390586**	ATE
				08/12→; →Orga 13342	2	**11.8116-0356.1**	**390586**	ATE
Guide Bolt, brake caliper								
1.6 BlueHDi 120 1.6 HDi 1.6 THP 150 1.6 THP 155 1.6 THP 165 1.6 THP 165 Hybrid 1.6 THP 200 2.0 BlueHDi 150 2.0 BlueHDi 180 2.0 HDi 135 2.0 HDi 165 2.0 HDi 165 Hybrid4 4x4 2.0 HDi 200 Hybrid4 All-wheel Drive	88 85 110 115 121 121 147 110 133 100 120 120 147	07/14→07/15 11/13→07/15 11/11→07/15 11/11→07/15 01/12→07/15 06/12→07/15 11/11→07/15 07/14→07/15 08/13→07/15 11/11→07/15 11/11→07/15 12/11→07/15 12/11→07/15			2	**11.8171-0008.1**	**990049**	ATE
1.6 HDi 110	82	11/11→07/15		Orga 13343→	2	**11.8171-0008.1**	**990049**	ATE
					2	**11.8171-0008.1**	**990049**	ATE
				→Orga 13342	2	**11.8171-0008.1**	**990049**	ATE
1.6 HDi 115	84	06/12→07/15		08/12→	2	**11.8171-0008.1**	**990049**	ATE
				Orga 13343→	2	**11.8171-0008.1**	**990049**	ATE
				08/12→; →Orga 13342	2	**11.8171-0008.1**	**990049**	ATE
CITROËN - EVASION MPV (22, U6) 03/94→07/02								
Guide Bolt, brake caliper								
1.8 1.9 TD 2.0 2.0 16V 2.0 HDI 2.0 HDI 16V 2.1 TD	73 - 76 68 89 100 80 - 81 80 80	02/96→07/02 10/95→12/98 06/94→07/02 05/00→07/02 08/99→07/02 09/99→07/02 05/96→07/02		+ ABS	2	**11.8171-0008.1**	**990049**	ATE
1.9 TD	66	11/94→07/02		02/95→; + ABS	2	**11.8171-0008.1**	**990049**	ATE

	kW				! #			
CITROËN - EVASION MPV (22, U6) 03/94→07/02								
Guide Bolt, brake caliper								
2.0 16V	97	05/98→04/00		12/98→; + ABS	2	**11.8171-0008.1**	**990049**	ATE
2.0 Turbo C.T.	108	06/94→07/02			2	**11.8171-0008.1**	**990049**	ATE
Accessory Kit, parking brake shoes								
1.8	73 - 76	02/96→07/02				**03.0137-9700.2**	**669700**	
2.0	89	06/94→07/02						
2.0 16V	100	05/00→07/02						
2.0 HDI	80 - 81	08/99→07/02						
2.0 HDI 16V	80	09/99→07/02						
2.0 Turbo C.T.	108	06/94→07/02						
2.1 TD	80	05/96→07/02						
1.9 TD	66	11/94→07/02		02/95→		**03.0137-9700.2**	**669700**	
2.0 16V	97	05/98→04/00		12/98→		**03.0137-9700.2**	**669700**	
CITROËN - GRAND C4 SPACETOURER (3A_, 3E_) 04/18→								
Guide Bolt, brake caliper								
1.2 PureTech 130	96	04/18→	←	for brake disc diameter [mm]: 283 / 304	2	**11.8171-0008.1**	**990049**	ATE
1.5 BlueHDi 130	96	05/18→						
1.6 BlueHDi 100	73	04/18→						
1.6 BlueHDi 120	88	04/18→						
1.6 HDi 115	85	04/18→						
1.6 PureTech 180	133	04/18→						
1.6 THP 165	110 - 121	04/18→						
2.0 BlueHDi 150	110	04/18→						
2.0 BlueHDi 160	120	04/18→						
Brake Pad Set, disc brake								
1.2 PureTech 130	96	04/18→	←	for brake disc diameter [mm]: 304; Orga 15365→		**13.0460-7339.2**	**607339**	ATE + WE / - WK
1.5 BlueHDi 130	96	05/18→						
1.6 BlueHDi 100	73	04/18→	→	for brake disc diameter [mm]: 268		**13.0460-3871.2**	**603871**	BOS 25839 17,8 - WE / - WK + Zub
1.6 BlueHDi 120	88	04/18→						
1.6 HDi 115	85	04/18→						
1.6 PureTech 180	133	04/18→				**13.0470-3871.2**	**LD3871**	BOS 25839 17,8 - WE / - WK + Zub Ceramic
1.6 THP 165	110 - 121	04/18→						
2.0 BlueHDi 150	110	04/18→						
2.0 BlueHDi 160	120	04/18→						
CITROËN - GRAND C4 SPACETOURER Van (3A_, 3E_) 04/18→								
Guide Bolt, brake caliper								
BlueHDi 130	96	05/19→	←	for brake disc diameter [mm]: 283 / 304	2	**11.8171-0008.1**	**990049**	ATE
BlueHDi 160	120	05/19→						
PureTech 130	96	05/19→						
Brake Pad Set, disc brake								
BlueHDi 130	96	05/19→	←	for brake disc diameter [mm]: 304; Orga 15365→		**13.0460-7339.2**	**607339**	ATE + WE / - WK
BlueHDi 160	120	05/19→						
PureTech 130	96	05/19→	→	for brake disc diameter [mm]: 268		**13.0460-3871.2**	**603871**	BOS 25839 17,8 - WE / - WK + Zub
						13.0470-3871.2	**LD3871**	BOS 25839 17,8 - WE / - WK + Zub Ceramic
CITROËN - JUMPER Bus (230P) 02/94→04/02								
Brake Shoe Set								
1.9 D	51	01/99→04/02	→	11/01→ 03/02; Payload [kg]: 1,000; not for motor home		**03.0137-0432.2**	**650432**	AP Ø 254 Width [mm] 57 + HEB
1.9 TD	66 - 68	02/94→04/02	→	11/01→ 03/02; Payload from [kg] 1,000 Payload to [kg] 1,400; not for motor home		**03.0137-0432.2**	**650432**	AP Ø 254 Width [mm] 57 + HEB
1.9 TD 4x4	68	08/96→04/02						
2.0	80	02/94→04/02						
2.0 4x4	80	08/96→04/02						
2.5 D	63	08/94→04/02	→	11/01→ 03/02; Payload [kg]: 1,400; not for motor home		**03.0137-0432.2**	**650432**	AP Ø 254 Width [mm] 57 + HEB
2.5 TD	76	08/94→04/02						
2.8 HDi	94	09/00→04/02						
2.8 D	64	01/99→02/02	→	S 16204256→; Payload [kg]: 1,400; not for motor home		**03.0137-0432.2**	**650432**	AP Ø 254 Width [mm] 57 + HEB
CITROËN - JUMPER Bus (244, Z_) 04/02→								
Brake Shoe Set								
2.0	81	04/02→	→	→ 03/06; Payload from [kg] 1,000 Payload to [kg] 1,400; not for motor home		**03.0137-0432.2**	**650432**	AP Ø 254 Width [mm] 57 + HEB
2.0 HDi	62	04/02→						
2.2 HDi	74	04/02→						
2.8 HDi	94	04/02→						

© 2022 Continental Aftermarket & Services GmbH

	kW				! #			
CITROËN - JUMPER Bus (244, Z_) 04/02→								
Brake Shoe Set								
2.8 HDi All-wheel Drive	94	04/02→	➡	→ 03/06; not for motor home		**03.0137-0432.2**	**650432**	AP Ø 254 Width [mm] 57 + HEB
CITROËN - JUMPER Platform/Chassis (230) 03/94→04/02								
Brake Shoe Set								
1.9 TD 2.0	66 - 68 80	03/94→04/02 03/94→04/02	➡	11/01→ 03/02; Payload from [kg] 1,000 Payload to [kg] 1,400; not for motor home		**03.0137-0432.2**	**650432**	AP Ø 254 Width [mm] 57 + HEB
2.5 D 2.5 D 4x4 2.5 TD 2.5 TDi 2.5 TDi 4x4 2.8 HDi	63 63 76 79 79 94	03/94→04/02 03/00→04/02 03/94→04/02 12/96→04/02 03/00→04/02 09/00→04/02	➡	11/01→ 03/02; Payload [kg]: 1,400; not for motor home		**03.0137-0432.2**	**650432**	AP Ø 254 Width [mm] 57 + HEB
2.8 D	64	01/99→02/02	➡	S 16204256→; Payload [kg]: 1,400; not for motor home		**03.0137-0432.2**	**650432**	AP Ø 254 Width [mm] 57 + HEB
CITROËN - JUMPER Platform/Chassis (244) 02/02→								
Brake Shoe Set								
2.0 HDi 2.2 HDi 2.8 HDi	62 74 94 - 107	04/02→ 04/02→ 04/02→	➡	→ 03/06; Payload from [kg] 1,000 Payload to [kg] 1,400; not for motor home		**03.0137-0432.2**	**650432**	AP Ø 254 Width [mm] 57 + HEB
2.2 HDi	74	02/02→06/06	➡	04/02→ 03/06; Payload from [kg] 1,000 Payload to [kg] 1,400; not for motor home		**03.0137-0432.2**	**650432**	AP Ø 254 Width [mm] 57 + HEB
2.8 HDi 4x4	94	02/02→06/06	➡	04/02→ 03/06; not for motor home		**03.0137-0432.2**	**650432**	AP Ø 254 Width [mm] 57 + HEB
CITROËN - JUMPER Van (230L) 02/94→08/02								
Brake Shoe Set								
1.9 D	50 - 51	02/94→04/02	➡	11/01→ 03/02; Payload [kg]: 1,000; not for motor home		**03.0137-0432.2**	**650432**	AP Ø 254 Width [mm] 57 + HEB
1.9 TD 2.0	66 - 68 80	03/94→04/02 03/94→04/02	➡	11/01→ 03/02; Payload from [kg] 1,000 Payload to [kg] 1,400; not for motor home		**03.0137-0432.2**	**650432**	AP Ø 254 Width [mm] 57 + HEB
2.0 4x4	80	10/96→01/02	➡	11/01→; Payload from [kg] 1,000 Payload to [kg] 1,400; not for motor home		**03.0137-0432.2**	**650432**	AP Ø 254 Width [mm] 57 + HEB
2.0 HDI	62	11/01→04/02	➡	→ 03/02; Payload from [kg] 1,000 Payload to [kg] 1,400; not for motor home		**03.0137-0432.2**	**650432**	AP Ø 254 Width [mm] 57 + HEB
2.5 D 2.5 D 4x4 2.5 TD 2.8 HDi 2.8 HDi 4x4	63 63 76 94 94	03/94→04/02 03/00→04/02 03/94→04/02 09/00→04/02 09/00→04/02	➡	11/01→ 03/02; Payload [kg]: 1,400; not for motor home		**03.0137-0432.2**	**650432**	AP Ø 254 Width [mm] 57 + HEB
CITROËN - JUMPER Van (244) 04/02→								
Brake Shoe Set								
2.0 2.0 bivalent 2.0 HDi 2.2 HDi 2.8 HDi	81 81 62 74 94 - 107	04/02→ 02/03→ 04/02→ 04/02→ 04/02→	➡	→ 03/06; Payload from [kg] 1,000 Payload to [kg] 1,400; not for motor home		**03.0137-0432.2**	**650432**	AP Ø 254 Width [mm] 57 + HEB
2.8 HDi 4x4	94	04/02→	➡	→ 03/06; Payload from [kg] 1,000 Payload to [kg] 1,400; not for motor home		**03.0137-0432.2**	**650432**	AP Ø 254 Width [mm] 57 + HEB
			➡	→ 03/06; not for motor home		**03.0137-0432.2**	**650432**	AP Ø 254 Width [mm] 57 + HEB
CITROËN - NEMO Box Body/MPV (AA_) 02/08→								
Accessory Kit, brake shoes								
1.3 BlueHDi 80 1.3 HDi 75	59 55	02/16→ 10/10→	➡			**03.0137-9309.2**	**669309**	AP
1.4 HDi	50	02/08→	➡	→ 09/10		**03.0137-9309.2**	**669309**	AP
CITROËN - NEMO MPV 04/09→								
Accessory Kit, brake shoes								
1.3 HDi 75 1.3 HDi 80	55 59	10/10→ 10/15→	➡			**03.0137-9309.2**	**669309**	AP
1.4 HDi	50	04/09→	➡	→ 09/10		**03.0137-9309.2**	**669309**	AP

	kW				! #			
CITROËN - SAXO (S0, S1) 02/96→04/04								
Guide Bolt, brake caliper								
1.4 VTS 1.6 VTR 1.6 VTL 1.6 VTS Electric	55 66 - 88 65 65 72 20	05/96→06/03 02/96→04/04 05/96→06/03 05/96→06/03 09/00→09/03 11/96→06/03			2	**11.8171-0008.1**	**990049**	ATE
1.6 VTS	87	06/96→09/03		07/96→	2	**11.8171-0008.1**	**990049**	ATE
CITROËN - XSARA (N1) 04/97→12/05								
Guide Bolt, brake caliper								
1.4 i 1.5 D	55 42	04/97→03/05 04/97→09/00		→ 08/00; + ABS	2	**11.8171-0008.1**	**990049**	ATE
1.4 LPG	55	05/98→08/00		+ ABS	2	**11.8171-0008.1**	**990049**	ATE
1.6 i 1.8 D 1.8 i 1.8 i Aut. 1.9 D 1.9 SD 1.9 TD	65 43 66 74 50 - 52 55 66	04/97→09/00 04/97→09/00 04/97→09/00 04/97→09/00 04/97→04/05 01/98→09/00 04/97→09/00		→ 08/00	2	**11.8171-0008.1**	**990049**	ATE
Brake Pad Set, disc brake								
1.4 HDi 1.6 16V	50 80	01/03→03/05 09/00→03/05	←			**13.0460-3994.2** **13.0470-3994.2**	**603994** **LD3994**	BOS 23599 19,0 - WE / - WK + Zub BOS 23599 19,0 - WE / - WK + Zub Ceramic
1.4 i 1.9 D 2.0 HDi 90	55 51 66	04/97→03/05 07/98→03/05 02/99→03/05	←	09/00→		**13.0460-3994.2** **13.0470-3994.2**	**603994** **LD3994**	BOS 23599 19,0 - WE / - WK + Zub BOS 23599 19,0 - WE / - WK + Zub Ceramic
1.9 D	52	04/00→04/05	←	09/00→ 03/05		**13.0460-3994.2** **13.0470-3994.2**	**603994** **LD3994**	BOS 23599 19,0 - WE / - WK + Zub BOS 23599 19,0 - WE / - WK + Zub Ceramic
Brake Disc								
1.4 HDi 1.6 16V	50 80	01/03→03/05 09/00→03/05	←			**24.0122-0194.1**	**422194**	Ø 266 Brake Disc Thickness [mm] 22 Minimum thickness [mm] 20 Vented + S
1.4 i 1.9 D 2.0 HDi 90	55 51 66	04/97→03/05 07/98→03/05 02/99→03/05	←	09/00→		**24.0122-0194.1**	**422194**	Ø 266 Brake Disc Thickness [mm] 22 Minimum thickness [mm] 20 Vented + S
1.9 D	52	04/00→04/05	←	09/00→ 03/05		**24.0122-0194.1**	**422194**	Ø 266 Brake Disc Thickness [mm] 22 Minimum thickness [mm] 20 Vented + S
CITROËN - XSARA Break (N2) 10/97→03/10								
Guide Bolt, brake caliper								
1.4 i 1.5 D 1.6 i 1.8 D 1.9 D	55 42 65 43 50 - 51	10/97→08/05 10/97→09/00 10/97→09/00 10/97→09/00 10/97→08/05		→ 08/00; - ABS	2	**11.8171-0008.1**	**990049**	ATE
Brake Pad Set, disc brake								
1.4 HDi 1.6 16V	50 80	01/03→08/05 09/00→08/05	←			**13.0460-3994.2** **13.0470-3994.2**	**603994** **LD3994**	BOS 23599 19,0 - WE / - WK + Zub BOS 23599 19,0 - WE / - WK + Zub Ceramic
1.4 i 1.9 D 2.0 HDI 90	55 51 66	10/97→08/05 07/98→08/05 02/99→08/05	←	09/00→		**13.0460-3994.2** **13.0470-3994.2**	**603994** **LD3994**	BOS 23599 19,0 - WE / - WK + Zub BOS 23599 19,0 - WE / - WK + Zub Ceramic
Brake Disc								
1.4 HDi 1.6 16V	50 80	01/03→08/05 09/00→08/05	←			**24.0122-0194.1**	**422194**	Ø 266 Brake Disc Thickness [mm] 22 Minimum thickness [mm] 20 Vented + S

© 2022 Continental Aftermarket & Services GmbH

	kW				! #			
CITROËN - XSARA Break (N2) 10/97→03/10								
Brake Disc								
1.4 i 1.9 D 2.0 HDI 90	55 51 66	10/97→08/05 07/98→08/05 02/99→08/05	←	09/00→		**24.0122-0194.1**	**422194**	Ø 266 Brake Disc Thickness [mm] 22 Minimum thickness [mm] 20 Vented + S
Accessory Kit, brake shoes								
1.4 HDi 1.4 i 1.9 D	50 55 51	01/03→08/05 10/97→08/05 07/98→08/05	→			**03.0137-9228.2**	**669228**	BDX
1.5 D 1.6 i 1.8 D 1.8 i 1.8 i Aut. 1.9 D 1.9 TD	42 65 43 66 74 50 - 55 66	10/97→09/00 10/97→09/00 10/97→09/00 10/97→09/00 10/97→09/00 10/97→09/00 10/97→09/00	→	→ 08/00		**03.0137-9228.2**	**669228**	BDX
CITROËN - XSARA Coupe (N0) 01/98→04/05								
Guide Bolt, brake caliper								
1.4 i	55	03/98→03/05		→ 08/00; + ABS	2	**11.8171-0008.1**	**990049**	ATE
1.6 i 1.8 i 1.9 D 1.9 TD	65 66 - 74 50 - 51 66	02/98→09/00 02/98→09/00 02/98→03/05 02/98→09/00		→ 08/00	2	**11.8171-0008.1**	**990049**	ATE
1.9 D	55	02/98→05/99			2	**11.8171-0008.1**	**990049**	ATE
Brake Pad Set, disc brake								
1.4 HDi 1.6 16V	50 80	01/03→03/05 09/00→03/05	←			**13.0460-3994.2** **13.0470-3994.2**	**603994** **LD3994**	BOS 23599 19,0 - WE / - WK + Zub BOS 23599 19,0 - WE / - WK + Zub Ceramic
1.4 i 1.9 D 2.0 HDI 90	55 51 66	03/98→03/05 02/99→03/05 02/99→03/05	←	09/00→		**13.0460-3994.2** **13.0470-3994.2**	**603994** **LD3994**	BOS 23599 19,0 - WE / - WK + Zub BOS 23599 19,0 - WE / - WK + Zub Ceramic
Brake Disc								
1.4 HDi 1.6 16V	50 80	01/03→03/05 09/00→03/05	←			**24.0122-0194.1**	**422194**	Ø 266 Brake Disc Thickness [mm] 22 Minimum thickness [mm] 20 Vented + S
1.4 i 1.9 D 2.0 HDI 90	55 51 66	03/98→03/05 02/99→03/05 02/99→03/05	←	09/00→		**24.0122-0194.1**	**422194**	Ø 266 Brake Disc Thickness [mm] 22 Minimum thickness [mm] 20 Vented + S
CITROËN - XSARA Estate Van 05/98→08/05								
Guide Bolt, brake caliper								
1.8 D	43	05/98→05/99		- ABS	2	**11.8171-0008.1**	**990049**	ATE
1.9 D	51	06/99→08/05		→ 08/00; - ABS	2	**11.8171-0008.1**	**990049**	ATE
Brake Pad Set, disc brake								
1.4 2.0 HDi	55 66	09/00→03/05 09/00→03/05	←			**13.0460-3994.2** **13.0470-3994.2**	**603994** **LD3994**	BOS 23599 19,0 - WE / - WK + Zub BOS 23599 19,0 - WE / - WK + Zub Ceramic
1.9 D	51	06/99→08/05	←	09/00→		**13.0460-3994.2** **13.0470-3994.2**	**603994** **LD3994**	BOS 23599 19,0 - WE / - WK + Zub BOS 23599 19,0 - WE / - WK + Zub Ceramic
Brake Disc								
1.4 2.0 HDi	55 66	09/00→03/05 09/00→03/05	←			**24.0122-0194.1**	**422194**	Ø 266 Brake Disc Thickness [mm] 22 Minimum thickness [mm] 20 Vented + S
1.9 D	51	06/99→08/05	←	09/00→		**24.0122-0194.1**	**422194**	Ø 266 Brake Disc Thickness [mm] 22 Minimum thickness [mm] 20 Vented + S

	kW				! #			
CITROËN - XSARA Estate Van 05/98→08/05								
Accessory Kit, brake shoes								
1.4 1.8 D 1.9 D	55 43 51	09/00→03/05 05/98→05/99 06/99→08/05	➡			**03.0137-9228.2**	**669228**	BDX
CITROËN - XSARA Hatchback Van (N3_) 05/98→03/05								
Guide Bolt, brake caliper								
1.4	55	05/98→10/04		→ 08/00; + ABS	2	**11.8171-0008.1**	**990049**	ATE
1.4 LPG	55	06/99→08/00		+ ABS	2	**11.8171-0008.1**	**990049**	ATE
1.8 D 1.9 D	43 65	05/98→05/99 05/98→08/00			2	**11.8171-0008.1**	**990049**	ATE
1.9 D	51	06/99→03/05		→ 08/00	2	**11.8171-0008.1**	**990049**	ATE
Brake Pad Set, disc brake								
1.4 1.9 D	55 51	05/98→10/04 06/99→03/05	⬅	09/00→		**13.0460-3994.2** **13.0470-3994.2**	**603994** **LD3994**	BOS 23599 19,0 - WE / - WK + Zub BOS 23599 19,0 - WE / - WK + Zub Ceramic
2.0 HDi	66	09/00→03/05	⬅			**13.0460-3994.2** **13.0470-3994.2**	**603994** **LD3994**	BOS 23599 19,0 - WE / - WK + Zub BOS 23599 19,0 - WE / - WK + Zub Ceramic
Brake Disc								
1.4 1.9 D	55 51	05/98→10/04 06/99→03/05	⬅	09/00→		**24.0122-0194.1**	**422194**	Ø 266 Brake Disc Thickness [mm] 22 Minimum thickness [mm] 20 Vented + S
2.0 HDi	66	09/00→03/05	⬅			**24.0122-0194.1**	**422194**	Ø 266 Brake Disc Thickness [mm] 22 Minimum thickness [mm] 20 Vented + S
CITROËN - XSARA PICASSO (N68) 09/99→06/12								
Brake Pad Set, disc brake								
1.6	65	12/99→09/01	⬅	06/00→; - ESP		**13.0460-3994.2** **13.0470-3994.2**	**603994** **LD3994**	BOS 23599 19,0 - WE / - WK + Zub BOS 23599 19,0 - WE / - WK + Zub Ceramic
1.6 1.6 16V 1.6 16V LPG 1.6 Chrono 1.8 16V	67 80 80 74 85	06/02→08/05 09/05→12/11 06/04→12/10 04/01→10/04 02/00→08/05	⬅	- ESP		**13.0460-3994.2** **13.0470-3994.2**	**603994** **LD3994**	BOS 23599 19,0 - WE / - WK + Zub BOS 23599 19,0 - WE / - WK + Zub Ceramic
1.6	70	12/99→12/10	⬅	09/00→ 03/10; - ESP		**13.0460-3994.2** **13.0470-3994.2**	**603994** **LD3994**	BOS 23599 19,0 - WE / - WK + Zub BOS 23599 19,0 - WE / - WK + Zub Ceramic
1.6 16V	81	06/05→09/06	⬅	09/05→; - ESP		**13.0460-3994.2** **13.0470-3994.2**	**603994** **LD3994**	BOS 23599 19,0 - WE / - WK + Zub BOS 23599 19,0 - WE / - WK + Zub Ceramic
1.6 HDi	66 - 80	05/04→12/11	⬅	→ 03/10; - ESP		**13.0460-3994.2** **13.0470-3994.2**	**603994** **LD3994**	BOS 23599 19,0 - WE / - WK + Zub BOS 23599 19,0 - WE / - WK + Zub Ceramic
2.0	88	02/04→10/04	⬅	- ESP; Manual Transmission		**13.0460-3994.2** **13.0470-3994.2**	**603994** **LD3994**	BOS 23599 19,0 - WE / - WK + Zub BOS 23599 19,0 - WE / - WK + Zub Ceramic
2.0 16V	100	01/03→06/12	⬅	→ 03/10; - ESP; Manual Transmission		**13.0460-3994.2** **13.0470-3994.2**	**603994** **LD3994**	BOS 23599 19,0 - WE / - WK + Zub BOS 23599 19,0 - WE / - WK + Zub Ceramic
2.0 16V	101	12/99→11/11	⬅	01/03→ 03/10; - ESP; Manual Transmission		**13.0460-3994.2** **13.0470-3994.2**	**603994** **LD3994**	BOS 23599 19,0 - WE / - WK + Zub BOS 23599 19,0 - WE / - WK + Zub Ceramic
2.0 HDi	66	12/99→12/11	⬅	06/00→ 03/10; - ESP		**13.0460-3994.2** **13.0470-3994.2**	**603994** **LD3994**	BOS 23599 19,0 - WE / - WK + Zub BOS 23599 19,0 - WE / - WK + Zub Ceramic

© 2022 Continental Aftermarket & Services GmbH

	kW				! #			
CITROËN - XSARA PICASSO (N68) 09/99→06/12								
Brake Disc								
1.6	65	12/99→09/01	←	06/00→; - ESP		**24.0122-0194.1**	**422194**	Ø 266 Brake Disc Thickness [mm] 22 Minimum thickness [mm] 20 Vented + S
1.6 1.6 16V 1.6 16V LPG 1.6 Chrono 1.8 16V	67 80 80 74 85	06/02→08/05 09/05→12/11 06/04→12/10 04/01→10/04 02/00→08/05	←	- ESP		**24.0122-0194.1**	**422194**	Ø 266 Brake Disc Thickness [mm] 22 Minimum thickness [mm] 20 Vented + S
1.6	70	12/99→12/10	←	09/00→ 03/10; - ESP		**24.0122-0194.1**	**422194**	Ø 266 Brake Disc Thickness [mm] 22 Minimum thickness [mm] 20 Vented + S
1.6 16V	81	06/05→09/06	←	09/05→; - ESP		**24.0122-0194.1**	**422194**	Ø 266 Brake Disc Thickness [mm] 22 Minimum thickness [mm] 20 Vented + S
1.6 HDi	66 - 80	05/04→12/11	←	→ 03/10; - ESP		**24.0122-0194.1**	**422194**	Ø 266 Brake Disc Thickness [mm] 22 Minimum thickness [mm] 20 Vented + S
2.0	88	02/04→10/04	←	- ESP; Manual Transmission		**24.0122-0194.1**	**422194**	Ø 266 Brake Disc Thickness [mm] 22 Minimum thickness [mm] 20 Vented + S
2.0 16V	100	01/03→06/12	←	→ 03/10; - ESP; Manual Transmission		**24.0122-0194.1**	**422194**	Ø 266 Brake Disc Thickness [mm] 22 Minimum thickness [mm] 20 Vented + S
2.0 16V	101	12/99→11/11	←	01/03→ 03/10; - ESP; Manual Transmission		**24.0122-0194.1**	**422194**	Ø 266 Brake Disc Thickness [mm] 22 Minimum thickness [mm] 20 Vented + S
2.0 HDi	66	12/99→12/11	←	06/00→ 03/10; - ESP		**24.0122-0194.1**	**422194**	Ø 266 Brake Disc Thickness [mm] 22 Minimum thickness [mm] 20 Vented + S
CITROËN - ZX Break (N2) 10/93→07/99								
Accessory Kit, brake shoes								
1.4 i 1.5 D 1.6 i 1.8 D 1.8 i 1.8 i 16V 1.9 D 1.9 TD	55 42 65 44 74 81 47 - 50 66	10/93→10/97 06/96→02/98 10/93→10/97 10/93→10/97 10/93→10/97 01/96→02/98 10/93→10/97 10/93→10/97	→			**03.0137-9228.2**	**669228**	BDX
CUPRA - ATECA (KH7, KHP) 09/18→								
Brake Master Cylinder								
2.0 TSI 4Drive	221 - 257	09/18→		for left-hand drive vehicles		**24.4123-1719.3**	**011017**	TRW Ø 23.8 without brake fluid reservoir
Brake Pad Set, disc brake								
2.0 TSI 4Drive	221	09/18→	←	+PR 1LD		**13.0460-2617.2** **13.0470-2617.2**	**602617** **LD2617**	TRW + WK TRW + WK Ceramic
			→	+PR 1KY / 2ES		**13.0460-7294.2** **13.0470-7294.2**	**607294** **LD7294**	ATE 25009 16,4 - WE / - WK ATE 25009 16,4 - WE / - WK Ceramic
2.0 TSI 4Drive	257	05/20→	←	+PR 1LD		**13.0460-2617.2**	**602617**	TRW + WK
			→	+PR 1KY / 2ES		**13.0460-7294.2**	**607294**	ATE 25009 16,4 - WE / - WK
Warning Contact, brake pad wear								
2.0 TSI 4Drive	221 - 257	09/18→	←	+PR 1LD	1	**24.8190-0065.2**	**620065**	
Brake Disc								
2.0 TSI 4Drive	221 - 257	09/18→	←	+PR 1LD		**24.0130-0225.1**	**430225**	Ø 340 Brake Disc Thickness [mm] 30 Minimum thickness [mm] 27 Vented + S

	kW				! #			
CUPRA - ATECA (KH7, KHP) 09/18→								
Brake Disc								
2.0 TSI 4Drive	221 - 257	09/18→	➡	+PR 1KY / 2ES		**24.0122-0219.1**	**422219**	Ø 310 Brake Disc Thickness [mm] 22 Minimum thickness [mm] 20 Vented
Sensor, wheel speed								
2.0 TSI 4Drive	221 - 257	09/18→	⬅			**24.0711-5273.3**	**360303**	
			⬅			**24.0711-5274.3**	**360304**	
			➡			**24.0711-5401.3**	**360330**	
			➡			**24.0711-5402.3**	**360331**	
Control Element, parking brake caliper								
2.0 TSI 4Drive	221 - 257	09/18→	➡	+PR 1KY;		**11.9282-1001.3**	**250159**	ATE
			➡	+PR 1KY;		**11.9282-1002.3**	**250160**	ATE
CUPRA - BORN (K11) 08/21→								
Sensor, wheel speed								
45 58 58 e-boost 77 e-boost	110 150 170 170	08/21→ 08/21→ 08/21→ 08/21→	⬅			**24.0711-5401.3**	**360330**	
			⬅			**24.0711-5402.3**	**360331**	
			➡			**24.0711-5401.3**	**360330**	
			➡			**24.0711-5402.3**	**360331**	
CUPRA - FORMENTOR (KM7) 07/20→								
Brake Caliper								
1.4 e-Hybrid	110 - 150	01/21→	⬅	+PR 1ZK;		**24.3571-1801.5**	**241387**	without holder
1.5 TSI 2.0 TDI 2.0 TDI 4Drive 2.0 TSI 2.0 TSI 4Drive 2.5 VZ5 4Drive VZ 1.4 e-Hybrid	110 110 110 180 140 - 228 287 180	11/20→ 03/21→ 03/21→ 03/21→ 07/20→ 10/21→ 02/21→	⬅	+PR 1ZK;		**24.3571-1802.5**	**241388**	without holder
Brake Pad Set, disc brake								
1.4 e-Hybrid	110 - 150	01/21→	⬅	+PR 1LD		**13.0460-2617.2** **13.0470-2617.2**	**602617** **LD2617**	TRW + WK TRW + WK Ceramic
1.5 TSI 2.0 TDI 2.0 TDI 4Drive 2.0 TSI 2.0 TSI 4Drive VZ 1.4 e-Hybrid	110 110 110 180 140 180	11/20→ 03/21→ 03/21→ 03/21→ 08/20→ 02/21→	⬅	+PR 1ZK		**13.0460-2785.2** **13.0470-2785.2**	**602785** **LD2785**	TRW 25683 20,4 + WE / + WK TRW 25683 20,4 + WE / + WK Ceramic
2.0 TSI 4Drive 2.5 VZ5 4Drive	228 287	07/20→ 10/21→	⬅	+PR 1LD		**13.0460-2617.2**	**602617**	TRW + WK
			⬅	+PR 1ZK		**13.0460-2785.2**	**602785**	TRW 25683 20,4 + WE / + WK
Warning Contact, brake pad wear								
1.4 e-Hybrid	110 - 150	01/21→	⬅	+PR 1LC / 1LD / 1ZK	1	**24.8190-0065.2**	**620065**	
1.5 TSI 2.0 TDI 2.0 TDI 4Drive 2.0 TSI 2.0 TSI 4Drive 2.5 VZ5 4Drive VZ 1.4 e-Hybrid	110 110 110 180 140 - 228 287 180	11/20→ 03/21→ 03/21→ 03/21→ 07/20→ 10/21→ 02/21→						
Brake Disc								
1.4 e-Hybrid	110 - 150	01/21→	⬅	+PR 1ZK		**24.0125-0158.1**	**425158**	Ø 312 Brake Disc Thickness [mm] 25 Minimum thickness [mm] 22 Vented + S
1.5 TSI 2.0 TDI 2.0 TDI 4Drive 2.0 TSI 2.0 TSI 4Drive 2.5 VZ5 4Drive VZ 1.4 e-Hybrid	110 110 110 180 140 - 228 287 180	11/20→ 03/21→ 03/21→ 03/21→ 07/20→ 10/21→ 02/21→	⬅	+PR 1LC / 1LD		**24.0130-0225.1**	**430225**	Ø 340 Brake Disc Thickness [mm] 30 Minimum thickness [mm] 27 Vented + S
			➡	+PR 1KE		**24.0110-0356.1**	**410356**	Ø 272 Brake Disc Thickness [mm] 9.7 Minimum thickness [mm] 8 + S

© 2022 Continental Aftermarket & Services GmbH

	kW				! #			
CUPRA - FORMENTOR (KM7) 07/20→								
Brake Disc								
1.4 e-Hybrid	110 - 150	01/21→	➡	+PR 1KY		**24.0122-0219.1**	**422219**	Ø 310 Brake Disc Thickness [mm] 22 Minimum thickness [mm] 20 Vented
1.5 TSI	110	11/20→						
2.0 TDI	110	03/21→						
2.0 TDI 4Drive	110	03/21→						
2.0 TSI	180	03/21→						
2.0 TSI 4Drive	140 - 228	07/20→						
2.5 VZ5 4Drive	287	10/21→						
VZ 1.4 e-Hybrid	180	02/21→						
Sensor, wheel speed								
1.4 e-Hybrid	110 - 150	01/21→	⬅	◪		**24.0711-5273.3**	**360303**	
1.5 TSI	110	11/20→	⬅	◪		**24.0711-5274.3**	**360304**	
2.0 TDI	110	03/21→						
2.0 TSI	180	03/21→						
VZ 1.4 e-Hybrid	180	02/21→						
2.0 TDI 4Drive	110	03/21→	⬅	◪		**24.0711-5273.3**	**360303**	
2.0 TSI 4Drive	140 - 228	07/20→	⬅	◪		**24.0711-5274.3**	**360304**	
2.5 VZ5 4Drive	287	10/21→	➡	◪		**24.0711-5401.3**	**360330**	
			➡	◪		**24.0711-5402.3**	**360331**	
CUPRA - LEON (KL1) 09/20→								
Brake Caliper								
1.4 e-HYBRID	110 - 150	09/20→	⬅	+PR 1ZK; ◪		**24.3571-1801.5**	**241387**	without holder
2.0 TSI	180 - 221	06/21→	⬅	+PR 1ZK; ◪		**24.3571-1802.5**	**241388**	without holder
VZ 1.4 e-HYBRID	180	09/20→						
Brake Pad Set, disc brake								
1.4 e-HYBRID	110	09/20→	⬅	+PR 1LD		**13.0460-2617.2**	**602617**	TRW + WK
VZ 1.4 e-HYBRID	180	09/20→				**13.0470-2617.2**	**LD2617**	TRW + WK Ceramic
			⬅	+PR 1ZK		**13.0460-2785.2**	**602785**	TRW 25683 20,4 + WE / + WK
						13.0470-2785.2	**LD2785**	TRW 25683 20,4 + WE / + WK Ceramic
1.4 e-HYBRID	150	09/20→	⬅	+PR 1ZK		**13.0460-2785.2**	**602785**	TRW 25683 20,4 + WE / + WK
2.0 TSI	180 - 221	06/21→				**13.0470-2785.2**	**LD2785**	TRW 25683 20,4 + WE / + WK Ceramic
Warning Contact, brake pad wear								
1.4 e-HYBRID	110	09/20→	⬅	+PR 1LC / 1LD / 1LE / 1ZK	1	**24.8190-0065.2**	**620065**	
VZ 1.4 e-HYBRID	180	09/20→						
1.4 e-HYBRID	150	09/20→	⬅	+PR 1ZK	1	**24.8190-0065.2**	**620065**	
2.0 TSI	180 - 221	06/21→						
Brake Disc								
1.4 e-HYBRID	110	09/20→	⬅	+PR 1ZE		**24.0125-0145.1**	**425145**	Ø 288 Brake Disc Thickness [mm] 25 Minimum thickness [mm] 22 Vented + S
VZ 1.4 e-HYBRID	180	09/20→						
			⬅	+PR 1ZK		**24.0125-0158.1**	**425158**	Ø 312 Brake Disc Thickness [mm] 25 Minimum thickness [mm] 22 Vented + S
			⬅	+PR 1LC / 1LD		**24.0130-0225.1**	**430225**	Ø 340 Brake Disc Thickness [mm] 30 Minimum thickness [mm] 27 Vented + S
			➡	+PR 1KE		**24.0110-0356.1**	**410356**	Ø 272 Brake Disc Thickness [mm] 9.7 Minimum thickness [mm] 8 + S
			➡	+PR 1KY		**24.0122-0219.1**	**422219**	Ø 310 Brake Disc Thickness [mm] 22 Minimum thickness [mm] 20 Vented
1.4 e-HYBRID	150	09/20→	⬅	+PR 1ZE		**24.0125-0145.1**	**425145**	Ø 288 Brake Disc Thickness [mm] 25 Minimum thickness [mm] 22 Vented + S
2.0 TSI	180 - 221	06/21→						

	kW				! #			
CUPRA - LEON (KL1) 09/20→								
Brake Disc								
1.4 e-HYBRID 2.0 TSI	150 180 - 221	09/20→ 06/21→	←	+PR 1ZK		**24.0125-0158.1**	**425158**	Ø 312 Brake Disc Thickness [mm] 25 Minimum thickness [mm] 22 Vented + S
			→	+PR 1KE		**24.0110-0356.1**	**410356**	Ø 272 Brake Disc Thickness [mm] 9.7 Minimum thickness [mm] 8 + S
Sensor, wheel speed								
1.4 e-HYBRID	110 - 150	09/20→	←			**24.0711-5273.3**	**360303**	
2.0 TSI	180 - 221	06/21→	←			**24.0711-5274.3**	**360304**	
VZ 1.4 e-HYBRID	180	09/20→	→		2	**24.0711-6337.3**	**360390**	
CUPRA - LEON Sportstourer (KL8) 09/20→								
Brake Caliper								
1.4 e-HYBRID	110 - 150	09/20→	←	+PR 1ZK;		**24.3571-1801.5**	**241387**	without holder
2.0 TSI	180 - 221	06/21→	←	+PR 1ZK;		**24.3571-1802.5**	**241388**	without holder
2.0 TSI 4Drive	228	06/21→						
VZ 1.4 e-HYBRID	180	09/20→						
Brake Pad Set, disc brake								
1.4 e-HYBRID VZ 1.4 e-HYBRID	110 180	09/20→ 09/20→	←	+PR 1LD		**13.0460-2617.2** **13.0470-2617.2**	**602617** **LD2617**	TRW + WK TRW + WK Ceramic
			←	+PR 1ZK		**13.0460-2785.2** **13.0470-2785.2**	**602785** **LD2785**	TRW 25683 20,4 + WE / + WK TRW 25683 20,4 + WE / + WK Ceramic
1.4 e-HYBRID 2.0 TSI	150 180 - 221	09/20→ 06/21→	←	+PR 1ZK		**13.0460-2785.2** **13.0470-2785.2**	**602785** **LD2785**	TRW 25683 20,4 + WE / + WK TRW 25683 20,4 + WE / + WK Ceramic
2.0 TSI 4Drive	228	06/21→	←	+PR 1ZK		**13.0460-2785.2**	**602785**	TRW 25683 20,4 + WE / + WK
Warning Contact, brake pad wear								
1.4 e-HYBRID VZ 1.4 e-HYBRID	110 180	09/20→ 09/20→	←	+PR 1LC / 1LD / 1LE / 1ZK	1	**24.8190-0065.2**	**620065**	
1.4 e-HYBRID 2.0 TSI 2.0 TSI 4Drive	150 180 - 221 228	09/20→ 06/21→ 06/21→	←	+PR 1ZK	1	**24.8190-0065.2**	**620065**	
Brake Disc								
1.4 e-HYBRID VZ 1.4 e-HYBRID	110 180	09/20→ 09/20→	←	+PR 1ZE		**24.0125-0145.1**	**425145**	Ø 288 Brake Disc Thickness [mm] 25 Minimum thickness [mm] 22 Vented + S
			←	+PR 1ZK		**24.0125-0158.1**	**425158**	Ø 312 Brake Disc Thickness [mm] 25 Minimum thickness [mm] 22 Vented + S
			←	+PR 1LC / 1LD		**24.0130-0225.1**	**430225**	Ø 340 Brake Disc Thickness [mm] 30 Minimum thickness [mm] 27 Vented + S
			→	+PR 1KE		**24.0110-0356.1**	**410356**	Ø 272 Brake Disc Thickness [mm] 9.7 Minimum thickness [mm] 8 + S
			→	+PR 1KY		**24.0122-0219.1**	**422219**	Ø 310 Brake Disc Thickness [mm] 22 Minimum thickness [mm] 20 Vented
1.4 e-HYBRID 2.0 TSI 2.0 TSI 4Drive	150 180 - 221 228	09/20→ 06/21→ 06/21→	←	+PR 1ZE		**24.0125-0145.1**	**425145**	Ø 288 Brake Disc Thickness [mm] 25 Minimum thickness [mm] 22 Vented + S
			←	+PR 1ZK		**24.0125-0158.1**	**425158**	Ø 312 Brake Disc Thickness [mm] 25 Minimum thickness [mm] 22 Vented + S
			→	+PR 1KE		**24.0110-0356.1**	**410356**	Ø 272 Brake Disc Thickness [mm] 9.7 Minimum thickness [mm] 8 + S

© 2022 Continental Aftermarket & Services GmbH

	kW				! #			
CUPRA - LEON Sportstourer (KL8) 09/20→								
Sensor, wheel speed								
1.4 e-HYBRID	110 - 150	09/20→	←			**24.0711-5273.3**	**360303**	
2.0 TSI	180 - 221	06/21→	←			**24.0711-5274.3**	**360304**	
VZ 1.4 e-HYBRID	180	09/20→	→		2	**24.0711-6337.3**	**360390**	
2.0 TSI 4Drive	228	06/21→	←			**24.0711-5273.3**	**360303**	
			←			**24.0711-5274.3**	**360304**	
			→			**24.0711-5401.3** **24.0711-5402.3**	**360330** **360331**	
			→			**24.0711-5401.3** **24.0711-5402.3**	**360330** **360331**	
DACIA - DOKKER Express Box Body/MPV 11/12→								
Spring, brake caliper								
1.2 TCe 115	84 - 85	12/12→	←		2	**11.8116-0356.1**	**390586**	ATE
1.3 TCe 100	75	08/19→						
1.3 TCe 130	96	08/19→						
1.5 Blue dCi 95	70	06/19→	←	for individual equipment ID: CHANOR / ENPC01	2	**11.8116-0356.1**	**390586**	ATE
			←	for individual equipment ID: CHAAUG	2	**11.8116-0356.1**	**390586**	ATE
1.5 dCi	62 - 66	11/12→	←	+ ESP	2	**11.8116-0356.1**	**390586**	ATE
1.5 dCi 75 / Blue dCi 75	55	12/12→	←	- ESP; for increased payload	2	**11.8116-0356.1**	**390586**	ATE
1.6	61 - 75	12/12→						
1.6 LPG	61 - 75	11/13→						
1.6 LPG	80	08/18→	←	for individual equipment ID: CHANOR / ENPC01 / CHAAUG	2	**11.8116-0356.1**	**390586**	ATE
Brake Pad Set, disc brake								
1.2 TCe 115	84 - 85	12/12→	←			**13.0460-7266.2** **13.0470-7266.2**	**607266** **LD7266**	ATE 24538 17,9 - WE / - WK ATE 24538 17,9 - WE / - WK Ceramic
1.3 TCe 100	75	08/19→						
1.3 TCe 130	96	08/19→						
1.5 Blue dCi 95	70	06/19→	←	for individual equipment ID: CHAAUG		**13.0460-7266.2** **13.0470-7266.2**	**607266** **LD7266**	ATE 24538 17,9 - WE / - WK ATE 24538 17,9 - WE / - WK Ceramic
			←	for individual equipment ID: CHANOR / ENPC01		**13.0460-7266.2** **13.0470-7266.2**	**607266** **LD7266**	ATE 24538 17,9 - WE / - WK ATE 24538 17,9 - WE / - WK Ceramic
1.5 dCi	62 - 66	11/12→	←	+ ESP		**13.0460-7266.2** **13.0470-7266.2**	**607266** **LD7266**	ATE 24538 17,9 - WE / - WK ATE 24538 17,9 - WE / - WK Ceramic
1.5 dCi 75 / Blue dCi 75	55	12/12→						
1.6	61 - 75	12/12→	←	- ESP; for increased payload		**13.0460-7266.2** **13.0470-7266.2**	**607266** **LD7266**	ATE 24538 17,9 - WE / - WK ATE 24538 17,9 - WE / - WK Ceramic
1.6 LPG	61 - 75	11/13→						
1.6 LPG	80	08/18→	←	for individual equipment ID: CHANOR / ENPC01 / CHAAUG		**13.0460-7266.2** **13.0470-7266.2**	**607266** **LD7266**	ATE 24538 17,9 - WE / - WK ATE 24538 17,9 - WE / - WK Ceramic
Sensor, wheel speed								
1.2 TCe 115	84 - 85	12/12→	←		2	**24.0711-5369.3**	**360378**	L= 619
1.3 TCe 100	75	08/19→						
1.3 TCe 130	96	08/19→						
1.5 Blue dCi 95	70	06/19→						
1.5 dCi	62 - 66	11/12→						
1.5 dCi 75 / Blue dCi 75	55	12/12→						
1.6	61 - 75	12/12→						
1.6 LPG	61 - 80	11/13→						
Wheel Brake Cylinder								
1.2 TCe 115	84 - 85	12/12→	→			**24.3222-1729.3**	**020526**	ALU
1.3 TCe 100	75	08/19→						
1.3 TCe 130	96	08/19→						
1.5 Blue dCi 95	70	06/19→						
1.5 dCi	62 - 66	11/12→						

	kW				! #			
DACIA - DOKKER Express Box Body/MPV 11/12→								
Wheel Brake Cylinder								
1.5 dCi 75 / Blue dCi 75 1.6 1.6 LPG	55 61 - 75 61 - 75	12/12→ 12/12→ 11/13→	➡			**24.3222-1729.3**	**020526**	ALU
1.6 LPG	80	08/18→	➡		2	**24.3222-1729.3**	**020526**	ALU
Accessory Kit, brake shoes								
1.2 TCe 115 1.3 TCe 100 1.3 TCe 130 1.5 Blue dCi 95 1.5 dCi 1.5 dCi 75 / Blue dCi 75 1.6 1.6 LPG	84 - 85 75 96 70 62 - 66 55 61 - 75 61 - 80	12/12→ 08/19→ 08/19→ 06/19→ 11/12→ 12/12→ 12/12→ 11/13→	➡			**03.0137-9228.2**	**669228**	BDX
Brake Shoe Set								
1.2 TCe 115 1.3 TCe 100 1.3 TCe 130 1.5 Blue dCi 95 1.5 dCi 1.5 dCi 75 / Blue dCi 75 1.6 1.6 LPG	84 - 85 75 96 70 62 - 66 55 61 - 75 61 - 80	12/12→ 08/19→ 08/19→ 06/19→ 11/12→ 12/12→ 12/12→ 11/13→	➡			**03.0137-0496.2** **03.0520-7222.3**	**650496** **697222**	BDX Ø 228 Width [mm] 42 + HEB Ø 228 Width [mm] 42 + RZ / + Zub TopKit
DACIA - DOKKER MPV (KE_) 11/12→								
Spring, brake caliper								
1.2 TCe 1.3 TCe 100 1.3 TCe 130	85 75 96	11/12→ 08/19→ 03/19→	⬅		2	**11.8116-0356.1**	**390586**	ATE
1.5 Blue dCi 95	70	12/18→	⬅	for individual equipment ID: CHANOR / ENPC01	2	**11.8116-0356.1**	**390586**	ATE
			⬅	for individual equipment ID: CHAAUG	2	**11.8116-0356.1**	**390586**	ATE
1.5 dCi / Blue dCi 75 1.5 dCi 1.6 1.6 LPG	55 63 - 66 61 - 75 61 - 75	11/12→ 11/12→ 11/12→ 11/13→	⬅	+ ESP	2	**11.8116-0356.1**	**390586**	ATE
1.6 LPG	80	08/18→	⬅	for individual equipment ID: CHANOR / ENPC01 / CHAAUG	2	**11.8116-0356.1**	**390586**	ATE
Brake Pad Set, disc brake								
1.2 TCe 1.3 TCe 100 1.3 TCe 130	85 75 96	11/12→ 08/19→ 03/19→	⬅			**13.0460-7266.2** **13.0470-7266.2**	**607266** **LD7266**	ATE 24538 17,9 - WE / - WK ATE 24538 17,9 - WE / - WK Ceramic
1.5 Blue dCi 95	70	12/18→	⬅	for individual equipment ID: CHAAUG		**13.0460-7266.2** **13.0470-7266.2**	**607266** **LD7266**	ATE 24538 17,9 - WE / - WK ATE 24538 17,9 - WE / - WK Ceramic
			⬅	for individual equipment ID: CHANOR / ENPC01		**13.0460-7266.2** **13.0470-7266.2**	**607266** **LD7266**	ATE 24538 17,9 - WE / - WK ATE 24538 17,9 - WE / - WK Ceramic
1.5 dCi / Blue dCi 75 1.5 dCi 1.6 1.6 LPG	55 63 - 66 61 - 75 61 - 75	11/12→ 11/12→ 11/12→ 11/13→	⬅	+ ESP		**13.0460-7266.2** **13.0470-7266.2**	**607266** **LD7266**	ATE 24538 17,9 - WE / - WK ATE 24538 17,9 - WE / - WK Ceramic
1.6 LPG	80	08/18→	⬅	for individual equipment ID: CHANOR / ENPC01 / CHAAUG		**13.0460-7266.2** **13.0470-7266.2**	**607266** **LD7266**	ATE 24538 17,9 - WE / - WK ATE 24538 17,9 - WE / - WK Ceramic
Sensor, wheel speed								
1.2 TCe 1.3 TCe 100	85 75	11/12→ 08/19→	⬅		2	**24.0711-5369.3**	**360378**	L= 619

© 2022 Continental Aftermarket & Services GmbH

	kW				! #			
DACIA - DOKKER MPV (KE_) 11/12→								
Sensor, wheel speed								
1.3 TCe 130	96	03/19→			2	**24.0711-5369.3**	**360378**	L= 619
1.5 Blue dCi 95	70	12/18→						
1.5 dCi / Blue dCi 75	55	11/12→						
1.5 dCi	63 - 66	11/12→						
1.6	61 - 75	11/12→						
1.6 LPG	61 - 80	11/13→						
Wheel Brake Cylinder								
1.2 TCe	85	11/12→			2	**24.3222-1729.3**	**020526**	ALU
1.3 TCe 100	75	08/19→						
1.3 TCe 130	96	03/19→						
1.5 Blue dCi 95	70	12/18→						
1.5 dCi / Blue dCi 75	55	11/12→						
1.5 dCi	63 - 66	11/12→						
1.6	61 - 75	11/12→						
1.6 LPG	61 - 80	11/13→						
Accessory Kit, brake shoes								
1.2 TCe	85	11/12→				**03.0137-9228.2**	**669228**	BDX
1.3 TCe 100	75	08/19→						
1.3 TCe 130	96	03/19→						
1.5 Blue dCi 95	70	12/18→						
1.5 dCi / Blue dCi 75	55	11/12→						
1.5 dCi	63 - 66	11/12→						
1.6	61 - 75	11/12→						
1.6 LPG	61 - 80	11/13→						
Brake Shoe Set								
1.2 TCe	85	11/12→				**03.0137-0496.2**	**650496**	BDX Ø 228 Width [mm] 42 + HEB
1.3 TCe 100	75	08/19→				**03.0520-7222.3**	**697222**	Ø 228 Width [mm] 42 + RZ / + Zub TopKit
1.3 TCe 130	96	03/19→						
1.5 Blue dCi 95	70	12/18→						
1.5 dCi / Blue dCi 75	55	11/12→						
1.5 dCi	63 - 66	11/12→						
1.6	61 - 75	11/12→						
1.6 LPG	61 - 80	11/13→						
DACIA - DUSTER (HM_) 10/17→								
Spring, brake caliper								
1.0 LPG	74	01/19→		for brake disc diameter [mm]: 280	2	**11.8116-0356.1**	**390586**	ATE
1.0 TCe 100	74	01/19→						
1.0 TCe 90	67	05/21→						
1.6 SCe 115	84	10/17→						
1.6 SCe 115 LPG	80	10/17→						
1.0 TCe 100 4x4	74	01/19→			2	**11.8116-0356.1**	**390586**	ATE
1.2 TCe 125	92	10/17→						
1.2 TCe 125 4x4	92	10/17→						
1.3 TCe 130	96	01/19→						
1.3 TCe 130 4x4	96	01/19→						
1.3 TCe 150	110	01/19→						
1.3 TCe 150 4x4	110	01/19→						
1.5 dCi 110	80	10/17→						
1.5 dCi 110 4x4	80	10/17→						
1.5 dCi 115	85	10/17→						
1.5 dCi 115 4x4	85	10/17→						
1.5 dCi 90	66	10/17→						
1.5 dCi 95	70	10/17→						
1.6 SCe 115 4x4	84	10/17→						
2.0 16V 4x4	101	04/18→						
Brake Pad Set, disc brake								
1.0 LPG	74	01/19→		for brake disc diameter [mm]: 280		**13.0460-7266.2**	**607266**	ATE 24538 17,9 - WE / - WK
1.0 TCe 100	74	01/19→				**13.0470-7266.2**	**LD7266**	ATE 24538 17,9 - WE / - WK Ceramic
1.0 TCe 90	67	05/21→						
1.6 SCe 115	84	10/17→						
1.6 SCe 115 LPG	80	10/17→						
1.0 TCe 100 4x4	74	01/19→				**13.0460-7266.2**	**607266**	ATE 24538 17,9 - WE / - WK
1.2 TCe 125	92	10/17→				**13.0470-7266.2**	**LD7266**	ATE 24538 17,9 - WE / - WK Ceramic
1.2 TCe 125 4x4	92	10/17→						

	kW				! #			
DACIA - DUSTER (HM_) 10/17→								
Brake Pad Set, disc brake								
1.3 TCe 130	96	01/19→				**13.0460-7266.2**	**607266**	ATE 24538 17,9 - WE / - WK
1.3 TCe 130 4x4	96	01/19→				**13.0470-7266.2**	**LD7266**	ATE 24538 17,9 - WE / - WK Ceramic
1.3 TCe 150	110	01/19→						
1.3 TCe 150 4x4	110	01/19→						
1.5 dCi 110	80	10/17→						
1.5 dCi 110 4x4	80	10/17→						
1.5 dCi 115	85	10/17→						
1.5 dCi 115 4x4	85	10/17→						
1.5 dCi 90	66	10/17→						
1.5 dCi 95	70	10/17→						
1.6 SCe 115 4x4	84	10/17→						
2.0 16V 4x4	101	04/18→						
Brake Hose								
1.0 LPG	74	01/19→		for brake disc diameter [mm]: 269	2	**24.5111-0450.3**	**331557**	L= 450
1.0 TCe 100	74	01/19→						
1.0 TCe 90	67	05/21→						
1.6 SCe 115	84	10/17→						
1.6 SCe 115 LPG	80	10/17→						
Wheel Brake Cylinder								
1.0 LPG	74	01/19→			2	**24.3222-1729.3**	**020526**	ALU
1.0 TCe 100	74	01/19→						
1.0 TCe 90	67	05/21→						
1.2 TCe 125	92	10/17→						
1.3 TCe 130	96	01/19→						
1.3 TCe 150	110	01/19→						
1.5 dCi 110	80	10/17→						
1.5 dCi 115	85	10/17→						
1.5 dCi 90	66	10/17→						
1.5 dCi 95	70	10/17→						
1.6 SCe 115	84	10/17→						
1.6 SCe 115 LPG	80	10/17→						
Accessory Kit, brake shoes								
1.0 LPG	74	01/19→				**03.0137-9228.2**	**669228**	BDX
1.0 TCe 100	74	01/19→						
1.0 TCe 90	67	05/21→						
1.2 TCe 125	92	10/17→						
1.3 TCe 130	96	01/19→						
1.3 TCe 150	110	01/19→						
1.5 dCi 110	80	10/17→						
1.5 dCi 115	85	10/17→						
1.5 dCi 90	66	10/17→						
1.5 dCi 95	70	10/17→						
1.6 SCe 115	84	10/17→						
1.6 SCe 115 LPG	80	10/17→						
Brake Shoe Set								
1.0 LPG	74	01/19→				**03.0137-0496.2**	**650496**	BDX Ø 228 Width [mm] 42 + HEB
1.0 TCe 100	74	01/19→				**03.0520-7222.3**	**697222**	Ø 228 Width [mm] 42 + RZ / + Zub TopKit
1.0 TCe 90	67	05/21→						
1.2 TCe 125	92	10/17→						
1.3 TCe 130	96	01/19→						
1.3 TCe 150	110	01/19→						
1.5 dCi 110	80	10/17→						
1.5 dCi 115	85	10/17→						
1.5 dCi 90	66	10/17→						
1.5 dCi 95	70	10/17→						
1.6 SCe 115	84	10/17→						
1.6 SCe 115 LPG	80	10/17→						
DACIA - DUSTER (HS_) 04/10→01/18								
Spring, brake caliper								
1.2 TCe 125	92	10/13→01/18			2	**11.8116-0356.1**	**390586**	ATE
1.2 TCe 125 4x4	92	06/15→01/18						
1.5 dCi 4x4	66	10/10→01/18						
1.5 dCi	63 - 79	04/10→01/18		+ ABS	2	**11.8116-0356.1**	**390586**	ATE
1.5 dCi 4x4	80 - 81	10/10→01/18						
1.5 dCi	80 - 81	08/13→01/18		09/13→; + ABS	2	**11.8116-0356.1**	**390586**	ATE
1.6 16V	77	04/10→01/18		+ ESP	2	**11.8116-0356.1**	**390586**	ATE
1.6 16V 4x4	77	06/10→01/18						
1.6 16V LPG	77	04/11→01/18						
1.6 SCe 115	84	06/15→01/18						
1.6 SCe 115 4x4	84	06/15→01/18						
1.6 SCe 115 LPG	84	06/15→01/18						
1.6 16V Hi-Flex	77	08/10→01/18		04/11→; + ESP	2	**11.8116-0356.1**	**390586**	ATE

© 2022 Continental Aftermarket & Services GmbH

	kW				! #			
DACIA - DUSTER (HS_) 04/10→01/18								
Brake Pad Set, disc brake								
1.2 TCe 125 1.2 TCe 125 4x4 1.5 dCi 4x4	92 92 66	10/13→01/18 06/15→01/18 10/10→01/18	←			**13.0460-7266.2** **13.0470-7266.2**	**607266** **LD7266**	ATE 24538 17,9 - WE / - WK ATE 24538 17,9 - WE / - WK Ceramic
1.5 dCi 1.5 dCi 4x4	63 - 79 80 - 81	04/10→01/18 10/10→01/18	←	+ ABS		**13.0460-7266.2** **13.0470-7266.2**	**607266** **LD7266**	ATE 24538 17,9 - WE / - WK ATE 24538 17,9 - WE / - WK Ceramic
1.5 dCi	80 - 81	08/13→01/18	←	09/13→; + ABS		**13.0460-7266.2** **13.0470-7266.2**	**607266** **LD7266**	ATE 24538 17,9 - WE / - WK ATE 24538 17,9 - WE / - WK Ceramic
1.6 16V 1.6 16V 4x4 1.6 16V LPG 1.6 SCe 115 1.6 SCe 115 4x4 1.6 SCe 115 LPG	77 77 77 84 84 84	04/10→01/18 06/10→01/18 04/11→01/18 06/15→01/18 06/15→01/18 06/15→01/18	←	+ ESP		**13.0460-7266.2** **13.0470-7266.2**	**607266** **LD7266**	ATE 24538 17,9 - WE / - WK ATE 24538 17,9 - WE / - WK Ceramic
1.6 16V Hi-Flex	77	08/10→01/18	←	04/11→; + ESP		**13.0460-7266.2** **13.0470-7266.2**	**607266** **LD7266**	ATE 24538 17,9 - WE / - WK ATE 24538 17,9 - WE / - WK Ceramic
Brake Hose								
1.2 TCe 125	92	10/13→01/18	←		2	**24.5111-0450.3**	**331557**	L= 450
1.5 dCi 1.6 16V 1.6 16V 4x4 1.6 16V LPG 1.6 SCe 115 1.6 SCe 115 4x4 1.6 SCe 115 LPG	63 - 66 77 77 77 84 84 84	04/10→01/18 04/10→01/18 06/10→01/18 04/11→01/18 06/15→01/18 06/15→01/18 06/15→01/18	←	- ESP	2	**24.5111-0450.3**	**331557**	L= 450
1.5 dCi	80 - 81	08/13→01/18	←	09/13→	2	**24.5111-0450.3**	**331557**	L= 450
1.6 16V Hi-Flex	77	08/10→01/18	←	04/11→; - ESP	2	**24.5111-0450.3**	**331557**	L= 450
Wheel Brake Cylinder								
1.2 TCe 125 1.6 SCe 115	92 84	10/13→01/18 06/15→01/18	→	07/16→	2	**24.3222-1729.3**	**020526**	ALU
Accessory Kit, brake shoes								
1.2 TCe 125 1.5 dCi 1.6 16V 1.6 16V LPG 1.6 SCe 115 1.6 SCe 115 LPG	92 63 - 79 77 77 84 84	10/13→01/18 04/10→01/18 04/10→01/18 04/11→01/18 06/15→01/18 06/15→01/18	→			**03.0137-9228.2**	**669228**	BDX
1.5 dCi	80 - 81	08/13→01/18	→	09/13→		**03.0137-9228.2**	**669228**	BDX
1.6 16V Hi-Flex	77	08/10→01/18	→	04/11→		**03.0137-9228.2**	**669228**	BDX
Brake Shoe Set								
1.2 TCe 125 1.5 dCi 1.6 16V 1.6 16V LPG 1.6 SCe 115 1.6 SCe 115 LPG	92 63 - 79 77 77 84 84	10/13→01/18 04/10→01/18 04/10→01/18 04/11→01/18 06/15→01/18 06/15→01/18	→			**03.0137-0496.2**	**650496**	BDX Ø 228 Width [mm] 42 + HEB
1.5 dCi	80 - 81	08/13→01/18	→	09/13→		**03.0137-0496.2**	**650496**	BDX Ø 228 Width [mm] 42 + HEB
1.6 16V Hi-Flex	77	08/10→01/18	→	04/11→		**03.0137-0496.2**	**650496**	BDX Ø 228 Width [mm] 42 + HEB
DACIA - DUSTER SUV Van 04/11→								
Spring, brake caliper								
1.2 TCe 125 4x4	92	10/13→	←	06/15→	2	**11.8116-0356.1**	**390586**	ATE
1.5 dCi	66	04/11→	←	+ ABS	2	**11.8116-0356.1**	**390586**	ATE
1.5 dCi	80	04/13→	←	09/13→; + ABS	2	**11.8116-0356.1**	**390586**	ATE
1.5 dCi 4x4	66	04/11→	←		2	**11.8116-0356.1**	**390586**	ATE
1.5 dCi 4x4	80	04/13→	←	08/13→; + ABS	2	**11.8116-0356.1**	**390586**	ATE
1.6 16V 1.6 16V 4x4 1.6 16V Hi-Flex 1.6 SCe 115	77 77 77 84	04/11→ 04/11→ 04/11→ 06/15→	←	+ ESP	2	**11.8116-0356.1**	**390586**	ATE

	kW				! #			
DACIA - DUSTER SUV Van 04/11→								
Spring, brake caliper								
1.6 SCe 115 4x4	84	06/15→01/18	←	+ ESP	2	**11.8116-0356.1**	**390586**	ATE
Brake Pad Set, disc brake								
1.2 TCe 125 4x4	92	10/13→	←	06/15→		**13.0460-7266.2** **13.0470-7266.2**	**607266** **LD7266**	ATE 24538 17,9 - WE / - WK ATE 24538 17,9 - WE / - WK Ceramic
1.5 dCi	66	04/11→	←	+ ABS		**13.0460-7266.2** **13.0470-7266.2**	**607266** **LD7266**	ATE 24538 17,9 - WE / - WK ATE 24538 17,9 - WE / - WK Ceramic
1.5 dCi	80	04/13→	←	09/13→; + ABS		**13.0460-7266.2** **13.0470-7266.2**	**607266** **LD7266**	ATE 24538 17,9 - WE / - WK ATE 24538 17,9 - WE / - WK Ceramic
1.5 dCi 4x4	66	04/11→	←			**13.0460-7266.2** **13.0470-7266.2**	**607266** **LD7266**	ATE 24538 17,9 - WE / - WK ATE 24538 17,9 - WE / - WK Ceramic
1.5 dCi 4x4	80	04/13→	←	08/13→; + ABS		**13.0460-7266.2** **13.0470-7266.2**	**607266** **LD7266**	ATE 24538 17,9 - WE / - WK ATE 24538 17,9 - WE / - WK Ceramic
1.6 16V 1.6 16V 4x4 1.6 16V Hi-Flex 1.6 SCe 115 1.6 SCe 115 4x4	77 77 77 84 84	04/11→ 04/11→ 04/11→ 06/15→ 06/15→01/18	←	+ ESP		**13.0460-7266.2** **13.0470-7266.2**	**607266** **LD7266**	ATE 24538 17,9 - WE / - WK ATE 24538 17,9 - WE / - WK Ceramic
Brake Hose								
1.5 dCi 1.6 16V 1.6 16V 4x4 1.6 16V Hi-Flex 1.6 SCe 115 1.6 SCe 115 4x4	66 77 77 77 84 84	04/11→ 04/11→ 04/11→ 04/11→ 06/15→ 06/15→01/18	←	- ESP	2	**24.5111-0450.3**	**331557**	L= 450
1.5 dCi	80	04/13→	←	09/13→	2	**24.5111-0450.3**	**331557**	L= 450
Wheel Brake Cylinder								
1.6 SCe 115	84	06/15→	→	07/16→		**24.3222-1729.3**	**020526**	ALU
Accessory Kit, brake shoes								
1.5 dCi 1.6 16V 1.6 16V Hi-Flex 1.6 SCe 115	66 77 77 84	04/11→ 04/11→ 04/11→ 06/15→	→			**03.0137-9228.2**	**669228**	BDX
1.5 dCi	80	04/13→	→	09/13→		**03.0137-9228.2**	**669228**	BDX
Brake Shoe Set								
1.5 dCi 1.6 16V 1.6 16V Hi-Flex 1.6 SCe 115	66 77 77 84	04/11→ 04/11→ 04/11→ 06/15→	→			**03.0137-0496.2**	**650496**	BDX Ø 228 Width [mm] 42 + HEB
1.5 dCi	80	04/13→	→	09/13→		**03.0137-0496.2**	**650496**	BDX Ø 228 Width [mm] 42 + HEB
DACIA - LODGY (JS_) 03/12→								
Spring, brake caliper								
1.2 TCe 1.3 TCe 100 1.3 TCe 130 1.5 Blue dCi 115 1.5 Blue dCi 95 1.5 dCi	85 75 96 85 70 79 - 81	03/12→ 01/19→ 01/19→ 08/18→ 08/18→ 03/12→	←		2	**11.8116-0356.1**	**390586**	ATE
1.5 dCi 1.6 1.6 LPG	66 61 61	03/12→ 03/12→ 11/13→	←	+ ESP	2	**11.8116-0356.1**	**390586**	ATE
Brake Pad Set, disc brake								
1.2 TCe 1.3 TCe 100 1.3 TCe 130 1.5 Blue dCi 115 1.5 Blue dCi 95 1.5 dCi	85 75 96 85 70 79 - 81	03/12→ 01/19→ 01/19→ 08/18→ 08/18→ 03/12→	←			**13.0460-7266.2** **13.0470-7266.2**	**607266** **LD7266**	ATE 24538 17,9 - WE / - WK ATE 24538 17,9 - WE / - WK Ceramic
1.5 dCi 1.6 1.6 LPG	66 61 61	03/12→ 03/12→ 11/13→	←	+ ESP		**13.0460-7266.2**	**607266**	ATE 24538 17,9 - WE / - WK

© 2022 Continental Aftermarket & Services GmbH

	kW				! #			
DACIA - LODGY (JS_) 03/12→								
Brake Pad Set, disc brake								
1.5 dCi	66	03/12→	←	+ ESP		**13.0470-7266.2**	**LD7266**	ATE 24538 17,9 - WE / - WK Ceramic
1.6	61	03/12→						
1.6 LPG	61	11/13→						
Sensor, wheel speed								
1.2 TCe	85	03/12→	←		2	**24.0711-5369.3**	**360378**	L= 619
1.3 TCe 100	75	01/19→						
1.3 TCe 130	96	01/19→						
1.5 Blue dCi 115	85	08/18→						
1.5 Blue dCi 95	70	08/18→						
1.5 dCi	63 - 81	03/12→						
1.6	61	03/12→						
1.6 LPG	61 - 80	11/13→						
1.6 SCe 100	75	06/15→						
Wheel Brake Cylinder								
1.2 TCe	85	03/12→	→		2	**24.3222-1729.3**	**020526**	ALU
1.3 TCe 100	75	01/19→						
1.3 TCe 130	96	01/19→						
1.5 Blue dCi 115	85	08/18→						
1.5 Blue dCi 95	70	08/18→						
1.5 dCi	63 - 81	03/12→						
1.6	61	03/12→						
1.6 LPG	61 - 80	11/13→						
1.6 SCe 100	75	06/15→						
Accessory Kit, brake shoes								
1.2 TCe	85	03/12→	→			**03.0137-9228.2**	**669228**	BDX
1.3 TCe 100	75	01/19→						
1.3 TCe 130	96	01/19→						
1.5 Blue dCi 115	85	08/18→						
1.5 Blue dCi 95	70	08/18→						
1.5 dCi	63 - 81	03/12→						
1.6	61	03/12→						
1.6 LPG	61 - 80	11/13→						
1.6 SCe 100	75	06/15→						
Brake Shoe Set								
1.2 TCe	85	03/12→	→			**03.0137-0496.2**	**650496**	BDX Ø 228 Width [mm] 42 + HEB
1.3 TCe 100	75	01/19→				**03.0520-7222.3**	**697222**	Ø 228 Width [mm] 42 + RZ / + Zub TopKit
1.3 TCe 130	96	01/19→						
1.5 Blue dCi 115	85	08/18→						
1.5 Blue dCi 95	70	08/18→						
1.5 dCi	63 - 81	03/12→						
1.6	61	03/12→						
1.6 LPG	61 - 80	11/13→						
1.6 SCe 100	75	06/15→						
DACIA - LOGAN II 10/12→								
Guide Bolt, brake caliper								
1.0 LPG	74	11/19→	←			**11.8171-0008.1**	**990049**	ATE
1.0 SCe 75	54	01/17→						
1.0 TCe 100	74	11/19→						
1.2	54 - 55	10/12→						
1.2 LPG	53 - 55	10/12→						
1.5 Blue dCi 95	70	05/18→						
1.5 dCi	63 - 66	10/12→						
1.5 dCi / Blue dCi 75	55	10/12→						
1.6	59 - 63	06/13→						
1.6 16V	77	01/13→						
TCe 90	66	10/12→						
TCe 90 LPG	66	09/15→						
Brake Hose								
1.0 LPG	74	11/19→	←		2	**24.5111-0450.3**	**331557**	L= 450
1.0 SCe 75	54	01/17→						
1.0 TCe 100	74	11/19→						
1.2	54 - 55	10/12→						

	kW				! #			
DACIA - LOGAN II 10/12→								
Brake Hose								
1.2 LPG	53 - 55	10/12→	←		2	**24.5111-0450.3**	**331557**	L= 450
1.5 Blue dCi 95	70	05/18→						
1.5 dCi	63 - 66	10/12→						
1.5 dCi / Blue dCi 75	55	10/12→						
1.6	59 - 63	06/13→						
1.6 16V	77	01/13→						
TCe 90	66	10/12→						
TCe 90 LPG	66	09/15→						
Sensor, wheel speed								
1.0 LPG	74	11/19→	←		2	**24.0711-5369.3**	**360378**	L= 619
1.0 SCe 75	54	01/17→						
1.0 TCe 100	74	11/19→						
1.2	54 - 55	10/12→						
1.2 LPG	53 - 55	10/12→						
1.5 Blue dCi 95	70	05/18→						
1.5 dCi	63 - 66	10/12→						
1.5 dCi / Blue dCi 75	55	10/12→						
1.6	59 - 63	06/13→						
1.6 16V	77	01/13→						
TCe 90	66	10/12→						
TCe 90 LPG	66	09/15→						
Accessory Kit, brake shoes								
1.0 LPG	74	11/19→	→	Inner Br. Drum Diam. [in]: 9		**03.0137-9228.2**	**669228**	BDX
1.0 TCe 100	74	11/19→						
1.5 dCi	63 - 66	10/12→						
1.6	59 - 63	06/13→						
1.6 16V	77	01/13→						
TCe 90	66	10/12→						
TCe 90 LPG	66	09/15→						
Brake Shoe Set								
1.0 LPG	74	11/19→	→	Inner Br. Drum Diam. [in]: 9		**03.0137-0496.2**	**650496**	BDX Ø 228 Width [mm] 42 + HEB
1.0 TCe 100	74	11/19→						
1.5 dCi	63 - 66	10/12→						
1.6	59 - 63	06/13→						
1.6 16V	77	01/13→						
TCe 90	66	10/12→						
TCe 90 LPG	66	09/15→						
DACIA - LOGAN EXPRESS (FS_) 10/07→								
Wheel Brake Cylinder								
1.4	55	03/09→	→	+ ABS; → 06/13		**24.3222-1729.3**	**020526**	ALU
1.5 dCi	50	03/09→						
1.5 dCi	55 - 65	03/09→	→	→ 06/13		**24.3222-1729.3**	**020526**	ALU
1.6	64	03/09→						
1.6 MPI 85	62	05/10→						
1.6 LPG	62	05/10→12/12	→		2	**24.3222-1729.3**	**020526**	ALU
Accessory Kit, brake shoes								
1.4	55	03/09→	→	→ 06/13		**03.0137-9228.2**	**669228**	BDX
1.5 dCi	50 - 65	03/09→						
1.6	64	03/09→						
1.6 MPI 85	62	05/10→						
1.6 LPG	62	05/10→12/12	→			**03.0137-9228.2**	**669228**	BDX
Brake Shoe Set								
1.4	55	03/09→	→	→ 06/13		**03.0137-0496.2**	**650496**	BDX Ø 228 Width [mm] 42 + HEB
1.5 dCi	50 - 65	03/09→	→	→ 06/13; + ABS		**03.0520-7222.3**	**697222**	Ø 228 Width [mm] 42 + RZ / + Zub TopKit
1.6	64	03/09→						
1.6 MPI 85	62	05/10→						
1.6 LPG	62	05/10→12/12	→			**03.0137-0496.2**	**650496**	BDX Ø 228 Width [mm] 42 + HEB
						03.0520-7222.3	**697222**	Ø 228 Width [mm] 42 + RZ / + Zub TopKit

© 2022 Continental Aftermarket & Services GmbH

	kW				! #			
DACIA - LOGAN MCV (KS_) 02/07→								
Wheel Brake Cylinder								
1.4 1.5 dCi 1.6 1.6 16V 1.6 16V Hi-Flex 1.6 Bifuel 1.6 MPI 85	55 48 - 65 64 77 77 62 - 64 62	02/07→ 02/07→ 02/07→06/13 02/07→ 11/09→ 11/08→ 05/10→	➡	→ 04/13; + ABS	2	**24.3222-1729.3**	**020526**	ALU
1.5 dCi	63	09/07→12/12	➡	+ ABS	2	**24.3222-1729.3**	**020526**	ALU
Accessory Kit, brake shoes								
1.4 1.5 dCi 1.6 1.6 16V 1.6 16V Hi-Flex 1.6 Bifuel	55 48 - 65 64 77 77 62 - 64	02/07→ 02/07→ 02/07→06/13 02/07→ 11/09→ 11/08→	➡	→ 04/13		**03.0137-9228.2**	**669228**	BDX
1.5 dCi 1.6 MPI 85	63 62	09/07→12/12 05/10→	➡			**03.0137-9228.2**	**669228**	BDX
Brake Shoe Set								
1.4 1.5 dCi 1.6 1.6 16V 1.6 16V Hi-Flex 1.6 Bifuel	55 48 - 65 64 77 77 62 - 64	02/07→ 04/08→ 02/07→06/13 02/07→ 11/09→ 11/08→	➡	→ 04/13		**03.0137-0496.2**	**650496**	BDX Ø 228 Width [mm] 42 + HEB
			➡	+ ABS; → 04/13		**03.0520-7222.3**	**697222**	Ø 228 Width [mm] 42 + RZ / + Zub TopKit
1.5 dCi	50	02/07→	➡	→ 04/13		**03.0137-0496.2**	**650496**	BDX Ø 228 Width [mm] 42 + HEB
			➡	04/08→; + ABS; → 04/13		**03.0520-7222.3**	**697222**	Ø 228 Width [mm] 42 + RZ / + Zub TopKit
1.5 dCi 1.6 MPI 85	63 62	09/07→12/12 05/10→	➡			**03.0137-0496.2**	**650496**	BDX Ø 228 Width [mm] 42 + HEB
			➡	+ ABS		**03.0520-7222.3**	**697222**	Ø 228 Width [mm] 42 + RZ / + Zub TopKit
DACIA - LOGAN MCV II 02/13→								
Guide Bolt, brake caliper								
1.0 LPG 1.0 SCe 75 1.0 TCe 100 1.2 1.2 LPG 1.5 Blue dCi 95 1.5 dCi 1.6 TCe 90 TCe 90 LPG	74 54 74 54 - 55 53 - 55 70 55 - 66 62 66 66	11/19→ 12/16→ 11/19→ 02/13→ 02/13→ 10/18→ 02/13→ 06/13→ 02/13→ 09/15→	⬅			**11.8171-0008.1**	**990049**	ATE
Brake Hose								
1.0 LPG 1.0 SCe 75 1.0 TCe 100 1.2 1.2 LPG 1.5 Blue dCi 95 1.5 dCi 1.6 TCe 90 TCe 90 LPG	74 54 74 54 - 55 53 - 55 70 55 - 66 62 66 66	11/19→ 12/16→ 11/19→ 02/13→ 02/13→ 10/18→ 02/13→ 06/13→ 02/13→ 09/15→	⬅		2	**24.5111-0450.3**	**331557**	L= 450
Sensor, wheel speed								
1.0 LPG 1.0 SCe 75 1.0 TCe 100 1.2 1.2 LPG 1.5 Blue dCi 95	74 54 74 54 - 55 53 - 55 70	11/19→ 12/16→ 11/19→ 02/13→ 02/13→ 10/18→	⬅		2	**24.0711-5369.3**	**360378**	L= 619

	kW				! #			
DACIA - LOGAN MCV II 02/13→								
Sensor, wheel speed								
1.5 dCi	55 - 66	02/13→			2	**24.0711-5369.3**	**360378**	L= 619
1.6	62	06/13→						
TCe 90	66	02/13→						
TCe 90 LPG	66	09/15→						
Accessory Kit, brake shoes								
1.0 LPG	74	11/19→		Inner Br. Drum Diam. [in]: 9		**03.0137-9228.2**	**669228**	BDX
1.0 SCe 75	54	12/16→						
1.0 TCe 100	74	11/19→						
1.2	54 - 55	02/13→				**03.0137-9228.2**	**669228**	BDX
1.2 LPG	53 - 55	02/13→						
1.5 Blue dCi 95	70	10/18→						
1.5 dCi	55 - 66	02/13→						
1.6	62	06/13→						
TCe 90	66	02/13→						
TCe 90 LPG	66	09/15→						
Brake Shoe Set								
1.0 LPG	74	11/19→		Inner Br. Drum Diam. [in]: 9		**03.0137-0496.2**	**650496**	BDX Ø 228 Width [mm] 42 + HEB
1.0 SCe 75	54	12/16→						
1.0 TCe 100	74	11/19→						
1.2	54 - 55	02/13→				**03.0137-0496.2**	**650496**	BDX Ø 228 Width [mm] 42 + HEB
1.2 LPG	53 - 55	02/13→						
1.5 Blue dCi 95	70	10/18→						
1.5 dCi	55 - 66	02/13→						
1.6	62	06/13→						
TCe 90	66	02/13→						
TCe 90 LPG	66	09/15→						
DACIA - LOGAN Pickup (US_) 03/08→								
Wheel Brake Cylinder								
1.4	55	01/09→		→ 06/13	2	**24.3222-1729.3**	**020526**	ALU
1.5 dCi	50 - 65	03/08→						
1.6	64	03/08→						
1.6 Bifuel	62	05/10→						
1.6 MPI 85	62	05/10→						
1.5 dCi	48	04/08→12/12			2	**24.3222-1729.3**	**020526**	ALU
1.6 16V	77	01/10→08/13						
Accessory Kit, brake shoes								
1.4	55	01/09→		→ 06/13		**03.0137-9228.2**	**669228**	BDX
1.5 dCi	50 - 65	03/08→						
1.6	64	03/08→						
1.6 Bifuel	62	05/10→						
1.6 MPI 85	62	05/10→						
1.5 dCi	48	04/08→12/12				**03.0137-9228.2**	**669228**	BDX
1.6 16V	77	01/10→08/13						
Brake Shoe Set								
1.4	55	01/09→		→ 06/13		**03.0137-0496.2**	**650496**	BDX Ø 228 Width [mm] 42 + HEB
1.5 dCi	50 - 65	03/08→				**03.0520-7222.3**	**697222**	Ø 228 Width [mm] 42 + RZ / + Zub TopKit
1.6	64	03/08→						
1.6 Bifuel	62	05/10→						
1.6 MPI 85	62	05/10→						
1.5 dCi	48	04/08→12/12				**03.0137-0496.2**	**650496**	BDX Ø 228 Width [mm] 42 + HEB
1.6 16V	77	01/10→08/13				**03.0520-7222.3**	**697222**	Ø 228 Width [mm] 42 + RZ / + Zub TopKit
DACIA - SANDERO 06/08→								
Wheel Brake Cylinder								
1.5 dCi	63	11/08→		→ 02/13; Inner Br. Drum Diam. [in]: 9	2	**24.3222-1729.3**	**020526**	ALU
Accessory Kit, brake shoes								
1.5 dCi	63	11/08→		→ 02/13		**03.0137-9228.2**	**669228**	BDX
Brake Shoe Set								
1.5 dCi	63	11/08→		→ 02/13; Inner Br. Drum Diam. [in]: 9		**03.0137-0496.2**	**650496**	BDX Ø 228 Width [mm] 42 + HEB

© 2022 Continental Aftermarket & Services GmbH

	kW				! #			
DACIA - SANDERO 06/08→								
Brake Shoe Set								
1.5 dCi	63	11/08→	➡	→ 02/13; Inner Br. Drum Diam. [in]: 9		**03.0520-7222.3**	**697222**	Ø 228 Width [mm] 42 + RZ / + Zub TopKit
DACIA - SANDERO II 10/12→								
Guide Bolt, brake caliper								
1.0 LPG	74	11/19→	⬅			**11.8171-0008.1**	**990049**	ATE
1.0 SCe 75	54	12/16→						
1.0 TCe 100	74	11/19→						
1.2	54 - 55	10/12→						
1.2 LPG	55	10/12→						
1.5 Blue dCi 95	70	08/18→						
1.5 dCi	63 - 66	10/12→						
1.5 dCi 75 / Blue dCi 75	55	10/12→						
1.6	63	11/12→						
TCe 90	66	10/12→						
TCe 90 LPG	66	09/15→						
Brake Hose								
1.0 LPG	74	11/19→	⬅		2	**24.5111-0450.3**	**331557**	L= 450
1.0 SCe 75	54	12/16→						
1.0 TCe 100	74	11/19→						
1.2	54	05/15→						
1.5 Blue dCi 95	70	08/18→						
1.5 dCi	63	01/13→						
1.5 dCi 75 / Blue dCi 75	55	10/12→						
1.6	63	11/12→						
TCe 90 LPG	66	09/15→						
1.2	55	10/12→	⬅	11/12→	2	**24.5111-0450.3**	**331557**	L= 450
1.2 LPG	55	10/12→						
1.5 dCi	66	10/12→						
TCe 90	66	10/12→						
Sensor, wheel speed								
1.0 LPG	74	11/19→	⬅		2	**24.0711-5369.3**	**360378**	L= 619
1.0 SCe 75	54	12/16→						
1.0 TCe 100	74	11/19→						
1.2	54 - 55	10/12→						
1.2 LPG	55	10/12→						
1.5 Blue dCi 95	70	08/18→						
1.5 dCi	63 - 66	10/12→						
1.5 dCi 75 / Blue dCi 75	55	10/12→						
1.6	63	11/12→						
TCe 90	66	10/12→						
TCe 90 LPG	66	09/15→						
Accessory Kit, brake shoes								
1.0 SCe 75	54	12/16→	➡	Inner Br. Drum Diam. [in]: 9		**03.0137-9228.2**	**669228**	BDX
1.5 Blue dCi 95	70	08/18→						
1.5 dCi	63 - 66	10/12→						
1.5 dCi 75 / Blue dCi 75	55	10/12→						
1.6	63	11/12→						
TCe 90	66	10/12→						
TCe 90 LPG	66	09/15→						
Brake Shoe Set								
1.0 SCe 75	54	12/16→	➡	Inner Br. Drum Diam. [in]: 9		**03.0137-0496.2**	**650496**	BDX Ø 228 Width [mm] 42 + HEB
1.5 Blue dCi 95	70	08/18→						
1.5 dCi	63 - 66	10/12→						
1.5 dCi 75 / Blue dCi 75	55	10/12→						
1.6	63	11/12→						
TCe 90	66	10/12→						
TCe 90 LPG	66	09/15→						
DACIA - SANDERO III 01/21→								
Spring, brake caliper								
1.0 TCe 100	74	01/21→	⬅	+ TR	2	**11.8116-0356.1**	**390586**	ATE
1.0 TCe 100 ECO-G	74	01/21→						
1.0 TCe 90	67	01/21→						
1.0 TCe 90 ECO-G	67	01/21→						
Guide Bolt, brake caliper								
1.0 TCe 100	74	01/21→	⬅	+ TR		**11.8171-0008.1**	**990049**	ATE
1.0 TCe 100 ECO-G	74	01/21→						
1.0 TCe 90	67	01/21→						

	kW				! #			
DACIA - SANDERO III 01/21→								
Guide Bolt, brake caliper								
1.0 TCe 90 ECO-G	67	01/21→	←	+ TR		**11.8171-0008.1**	**990049**	ATE
Brake Pad Set, disc brake								
1.0 TCe 100 1.0 TCe 100 ECO-G 1.0 TCe 90 1.0 TCe 90 ECO-G	74 74 67 67	01/21→ 01/21→ 01/21→ 01/21→	←	+ TR		**13.0460-7266.2** **13.0470-7266.2**	**607266** **LD7266**	ATE 24538 17,9 - WE / - WK ATE 24538 17,9 - WE / - WK Ceramic
DAEWOO - ESPERO (KLEJ) 10/91→09/99								
Guide Bolt, brake caliper								
1.5 1.8	55 66	10/97→08/99 02/95→09/99		→ 06/99	2	**11.8171-0008.1**	**990049**	ATE
1.5 16V 1.8 2.0	66 70 77	02/95→06/99 02/95→06/99 02/95→06/99			2	**11.8171-0008.1**	**990049**	ATE
DAEWOO - GENTRA Saloon 06/13→								
Brake Caliper								
1.5	79	06/13→	→			**24.3321-1703.5**	**241381**	without holder
			→			**24.3321-1704.5**	**241382**	without holder
DAEWOO - KORANDO (KJ) 11/98→								
Brake Pad Set, disc brake								
2.3 2.9 D 2.9 TD 3.2 4x4	103 - 105 72 88 156	01/99→ 01/99→ 01/99→ 01/99→	←			**13.0460-5933.2**	**605933**	AKE 21725 16,8 + WK
DAEWOO - KORANDO Cabrio (KJ) 02/99→								
Brake Pad Set, disc brake								
2.0 16V 2.3 2.9 D 2.9 TD	94 103 - 105 72 88	02/99→ 02/99→ 02/99→ 02/99→	←			**13.0460-5933.2**	**605933**	AKE 21725 16,8 + WK
DAEWOO - LACETTI Hatchback (KLAN) 02/02→								
Brake Caliper								
1.4 1.6 1.8	69 - 70 80 90	06/02→ 02/04→ 02/04→	→			**24.3321-1703.5**	**241381**	without holder
			→			**24.3321-1704.5**	**241382**	without holder
DAEWOO - LACETTI Saloon 06/99→07/03								
Brake Caliper								
1.6	78	06/99→07/03	→			**24.3321-1703.5**	**241381**	without holder
			→			**24.3321-1704.5**	**241382**	without holder
DAEWOO - LACETTI Saloon (J200) 06/02→12/09								
Brake Caliper								
1.5	63	08/03→12/04	→			**24.3321-1703.5**	**241381**	without holder
			→			**24.3321-1704.5**	**241382**	without holder
DAEWOO - LANOS (KLAT) 04/97→								
Guide Bolt, brake caliper								
1.3 1.5	55 63 - 73	05/97→ 05/97→	←	→ 447433	2	**11.8171-0008.1**	**990049**	ATE
1.6 16V	78	05/97→		→ 447433	2	**11.8171-0008.1**	**990049**	ATE
DAEWOO - LANOS Saloon (KLAT) 02/97→								
Guide Bolt, brake caliper								
1.3 1.5	55 63 - 73	05/97→ 05/97→	←	→ 447433	2	**11.8171-0008.1**	**990049**	ATE
1.6 16V	78	02/97→		05/97→; → 447433	2	**11.8171-0008.1**	**990049**	ATE

© 2022 Continental Aftermarket & Services GmbH

	kW				! #			
DAEWOO - NEXIA 02/95→08/97								
Guide Bolt, brake caliper								
1.5	44 - 55	02/95→08/97	←		2	**11.8171-0008.1**	**990049**	ATE
1.5 16V	66	02/95→08/97			2	**11.8171-0008.1**	**990049**	ATE
DAEWOO - NEXIA Saloon 02/95→06/08								
Guide Bolt, brake caliper								
1.5	44 - 55	02/95→08/97	←		2	**11.8171-0008.1**	**990049**	ATE
1.5 1.5 16V 1.6	59 66 80	08/97→06/08 02/95→08/97 08/97→06/08			2	**11.8171-0008.1**	**990049**	ATE
1.8	74	02/95→06/08		10/95→	2	**11.8171-0008.1**	**990049**	ATE
DAEWOO - NUBIRA (J100) 04/97→								
Brake Caliper								
1.6	76	08/02→07/03	→	◪		**24.3321-1703.5**	**241381**	without holder
			→	◪		**24.3321-1704.5**	**241382**	without holder
2.0 CDX	93	08/02→07/03	→	01/03→; ◪		**24.3321-1703.5**	**241381**	without holder
			→	01/03→; ◪		**24.3321-1704.5**	**241382**	without holder
DAEWOO - NUBIRA Saloon (J100) 04/97→								
Brake Caliper								
1.6 16V	76	07/00→	→	→ 02/05; + ABS; ◪		**24.3321-1703.5**	**241381**	without holder
			→	→ 02/05; + ABS; ◪		**24.3321-1704.5**	**241382**	without holder
2.0	81	06/99→07/03	→	◪		**24.3321-1703.5**	**241381**	without holder
			→	◪		**24.3321-1704.5**	**241382**	without holder
2.0 16V	93	12/00→	→	→ 02/05; ◪		**24.3321-1703.5**	**241381**	without holder
			→	→ 02/05; ◪		**24.3321-1704.5**	**241382**	without holder
DAEWOO - NUBIRA Saloon (J200) 07/03→								
Brake Caliper								
1.4 1.6 1.8	69 80 90	10/03→12/04 07/03→ 07/03→	→	◪		**24.3321-1703.5**	**241381**	without holder
			→	◪		**24.3321-1704.5**	**241382**	without holder
DAEWOO - NUBIRA Wagon (J100) 04/97→								
Brake Caliper								
1.6 16V	76	12/00→	→	→ 02/05; + ABS; ◪		**24.3321-1703.5**	**241381**	without holder
			→	→ 02/05; + ABS; ◪		**24.3321-1704.5**	**241382**	without holder
2.0 16V	93	12/00→	→	→ 02/05; ◪		**24.3321-1703.5**	**241381**	without holder
			→	→ 02/05; ◪		**24.3321-1704.5**	**241382**	without holder
DAEWOO - NUBIRA Wagon (J200) 07/03→								
Brake Caliper								
1.6 1.8	80 90	07/03→ 07/03→	→	◪		**24.3321-1703.5**	**241381**	without holder
			→	◪		**24.3321-1704.5**	**241382**	without holder
DAEWOO - RACER Hatchback 01/86→12/97								
Guide Bolt, brake caliper								
1.5	52	03/95→12/97	←	→ 08/97	2	**11.8171-0008.1**	**990049**	ATE
DAIHATSU - CUORE V (L7_) 10/98→05/03								
Brake Disc								
1.0	40 - 41	11/98→12/02	←			**24.0111-0159.1**	**411159**	Ø 211 Brake Disc Thickness [mm] 11 Minimum thickness [mm] 10
1.0 DVVT	43	10/00→02/03	←	→ 12/02		**24.0111-0159.1**	**411159**	Ø 211 Brake Disc Thickness [mm] 11 Minimum thickness [mm] 10
Brake Shoe Set								
1.0	40	11/98→09/00	→	10/99→; - ABS		**03.0137-0417.2**	**650417**	Ø 165 Width [mm] 28 - HEB

	kW				! #			
DAIHATSU - CUORE VI (L251, L250_, L260_) 03/03→								
Brake Disc								
0.7 1.0	35 43	03/03→ 05/03→	←	→ 08/07		**24.0111-0159.1**	**411159**	Ø 211 Brake Disc Thickness [mm] 11 Minimum thickness [mm] 10
DAIHATSU - CUORE VII (L275_, L285_, L276_) 12/06→								
Brake Disc								
0.7 1.0 LPG	43 51	12/06→ 09/11→12/12	←	Rim Size [in]: 13		**24.0111-0159.1**	**411159**	Ø 211 Brake Disc Thickness [mm] 11 Minimum thickness [mm] 10
1.0	51	04/07→	←	09/07→ 01/13; Rim Size [in]: 13		**24.0111-0159.1**	**411159**	Ø 211 Brake Disc Thickness [mm] 11 Minimum thickness [mm] 10
Accessory Kit, brake shoes								
0.7 1.0 LPG	43 51	12/06→ 09/11→12/12	→	+ ESP		**03.0137-9353.2**	**669353**	
1.0	51	04/07→	→	09/07→ 01/13; + ESP		**03.0137-9353.2**	**669353**	
DAIHATSU - MATERIA (M4_) 10/06→								
Accessory Kit, brake shoes								
1.3 1.5	67 76	10/06→ 10/06→	→	→ 07/12		**03.0137-9353.2**	**669353**	
1.5 LPG	76	01/10→12/11	→			**03.0137-9353.2**	**669353**	
DAIHATSU - MOVE (L9_) 04/97→09/02								
Brake Pad Set, disc brake								
1.0 i	40	10/98→12/00	←			**13.0460-5852.2**	**605852**	23497 15,0 + WK + Zub
1.0 i	41	10/98→09/02	←	→ 11/00		**13.0460-5852.2**	**605852**	23497 15,0 + WK + Zub
Brake Shoe Set								
1.0 i	40	10/98→12/00	→	+ ABS		**03.0137-0417.2**	**650417**	Ø 165 Width [mm] 28 - HEB
1.0 i	41	10/98→09/02	→	10/99→ 11/00; - ABS		**03.0137-0417.2**	**650417**	Ø 165 Width [mm] 28 - HEB
DAIHATSU - NAKED 11/99→02/05								
Brake Pad Set, disc brake								
0.7 0.7 Turbo All-wheel Drive	34 47	11/99→02/05 11/99→02/05	←			**13.0460-5852.2**	**605852**	23497 15,0 + WK + Zub
Brake Disc								
0.7 0.7 Turbo All-wheel Drive	34 47	11/99→02/05 11/99→02/05	←			**24.0111-0159.1**	**411159**	Ø 211 Brake Disc Thickness [mm] 11 Minimum thickness [mm] 10
Brake Shoe Set								
0.7 0.7 Turbo All-wheel Drive	34 47	11/99→02/05 11/99→02/05	→	+ ABS		**03.0137-0417.2**	**650417**	Ø 165 Width [mm] 28 - HEB
DAIHATSU - SIRION (M1) 04/98→04/05								
Brake Pad Set, disc brake								
1.0 1.0 i 1.0 i 4WD	40 41 41	04/98→10/00 04/98→09/00 04/99→09/00	←	→ 08/00		**13.0460-5852.2**	**605852**	23497 15,0 + WK + Zub
1.0 i 1.0 i 4WD 1.3 Rally 1.3 Rally 4WD 1.3 Sport 1.3 Sport 4WD	43 43 81 81 75 75	09/00→01/05 09/00→01/05 06/02→03/05 06/02→03/05 08/00→01/05 08/00→03/05	←	→ 12/04		**13.0460-5852.2**	**605852**	23497 15,0 + WK + Zub
DAIHATSU - SIRION (M3_) 01/05→								
Accessory Kit, brake shoes								
1.0 1.0 LPG 1.3 1.5	51 51 64 - 67 76	01/05→06/13 01/05→06/13 01/05→ 03/08→	→	→ 01/13		**03.0137-9353.2**	**669353**	

© 2022 Continental Aftermarket & Services GmbH

	kW				! #			
DAIHATSU - TREVIS 06/06→								
Brake Disc								
1.0	43	06/06→		Rim Size [in]: 14		**24.0111-0159.1**	**411159**	Ø 211 Brake Disc Thickness [mm] 11 Minimum thickness [mm] 10
DAIHATSU - YRV (M2) 02/01→								
Brake Pad Set, disc brake								
1.0 1.3 1.3 4WD	43 64 64	02/01→ 02/01→ 02/01→		→ 08/06		**13.0460-5852.2**	**605852**	23497 15,0 + WK + Zub
DS - DS 3 (SA_) 04/15→07/19								
Brake Pad Set, disc brake								
1.2 THP 110 / PureTech 110 1.2 THP 130 1.2 VTi 82 1.6 BlueHDi 100 1.6 BlueHDi 116 1.6 BlueHDi 120 1.6 BlueHDi 75 1.6 THP 1.6 THP 165 1.6 THP 208	81 96 60 73 85 88 55 110 - 120 121 153	04/15→07/19 09/15→07/19 04/15→07/19 04/15→07/19 07/15→07/19 07/15→07/19 07/15→07/19 07/15→07/19 07/15→07/19 09/15→07/19		for brake disc diameter [mm]: 266		**13.0460-3994.2** **13.0470-3994.2**	**603994** **LD3994**	BOS 23599 19,0 - WE / - WK + Zub BOS 23599 19,0 - WE / - WK + Zub Ceramic
Brake Disc								
1.2 THP 110 / PureTech 110 1.2 THP 130 1.2 VTi 82 1.6 BlueHDi 100 1.6 BlueHDi 116 1.6 BlueHDi 120 1.6 BlueHDi 75 1.6 THP 1.6 THP 165 1.6 THP 208	81 96 60 73 85 88 55 110 - 120 121 153	04/15→07/19 09/15→07/19 04/15→07/19 04/15→07/19 07/15→07/19 07/15→07/19 07/15→07/19 07/15→07/19 07/15→07/19 09/15→07/19				**24.0122-0194.1**	**422194**	Ø 266 Brake Disc Thickness [mm] 22 Minimum thickness [mm] 20 Vented + S
Accessory Kit, brake shoes								
1.2 THP 110 / PureTech 110 1.2 THP 130 1.2 VTi 82 1.6 BlueHDi 100 1.6 BlueHDi 116 1.6 BlueHDi 120 1.6 BlueHDi 75 1.6 THP 1.6 THP 165 1.6 THP 208	81 96 60 73 85 88 55 110 - 120 121 153	04/15→07/19 09/15→07/19 04/15→07/19 04/15→07/19 07/15→07/19 07/15→07/19 07/15→07/19 07/15→07/19 07/15→07/19 09/15→07/19		Ø 228		**03.0137-9228.2**	**669228**	BDX
DS - DS 3 Convertible (SB_) 07/15→07/19								
Brake Pad Set, disc brake								
1.2 THP 110 1.2 THP 130 1.2 VTi 82 1.6 BlueHDi 100 1.6 BlueHDi 116 1.6 BlueHDi 120 1.6 THP 1.6 THP 165 1.6 THP 208	81 96 60 73 85 88 110 - 120 121 153	07/15→07/19 09/15→07/19 07/15→07/19 07/15→07/19 07/15→07/19 07/15→07/19 07/15→07/19 07/15→07/19 09/15→07/19		for brake disc diameter [mm]: 266		**13.0460-3994.2** **13.0470-3994.2**	**603994** **LD3994**	BOS 23599 19,0 - WE / - WK + Zub BOS 23599 19,0 - WE / - WK + Zub Ceramic
Brake Disc								
1.2 THP 110 1.2 THP 130 1.2 VTi 82 1.6 BlueHDi 100 1.6 BlueHDi 116 1.6 BlueHDi 120 1.6 THP 1.6 THP 165 1.6 THP 208	81 96 60 73 85 88 110 - 120 121 153	07/15→07/19 09/15→07/19 07/15→07/19 07/15→07/19 07/15→07/19 07/15→07/19 07/15→07/19 07/15→07/19 09/15→07/19				**24.0122-0194.1**	**422194**	Ø 266 Brake Disc Thickness [mm] 22 Minimum thickness [mm] 20 Vented + S

	kW				! #			
DS - DS 3 Convertible (SB_) 07/15→07/19								
Accessory Kit, brake shoes								
1.2 THP 110 1.2 THP 130 1.2 VTi 82 1.6 BlueHDi 100 1.6 BlueHDi 116 1.6 BlueHDi 120 1.6 THP 1.6 THP 165 1.6 THP 208	81 96 60 73 85 88 110 - 120 121 153	07/15→07/19 09/15→07/19 07/15→07/19 07/15→07/19 07/15→07/19 07/15→07/19 07/15→07/19 07/15→07/19 09/15→07/19	➡	Ø 228		**03.0137-9228.2**	**669228**	BDX
DS - DS 3 CROSSBACK (UR_, UC_, UJ_) 10/18→								
Spring, brake caliper								
1.2 PureTech 100 1.2 PureTech 130 1.2 PureTech 155 1.5 BlueHDi 100 1.5 BlueHDi 110 1.5 BlueHDi 130 E-TENSE	74 96 115 75 81 96 100	10/18→ 10/18→ 10/18→ 10/18→ 01/21→ 10/18→ 05/19→	⬅	for brake disc diameter [mm]: 302; →Orga 16246	2	**11.8116-0356.1**	**390586**	ATE
Guide Bolt, brake caliper								
1.2 PureTech 100 1.2 PureTech 130 1.2 PureTech 155 1.5 BlueHDi 100 1.5 BlueHDi 110 1.5 BlueHDi 130 E-TENSE	74 96 115 75 81 96 100	10/18→ 10/18→ 10/18→ 10/18→ 01/21→ 10/18→ 05/19→	⬅	for brake disc diameter [mm]: 302; →Orga 16246		**11.8171-0008.1**	**990049**	ATE
Brake Pad Set, disc brake								
E-TENSE	100	05/19→	➡			**13.0460-3871.2** **13.0470-3871.2**	**603871** **LD3871**	BOS 25839 17,8 - WE / - WK + Zub BOS 25839 17,8 - WE / - WK + Zub Ceramic
DS - DS 4 / DS 4 CROSSBACK (NX_) 07/15→12/18								
Spring, brake caliper								
1.2 THP 130 1.6 BlueHDi 100 1.6 BlueHDi 115 1.6 BlueHDi 120 1.6 THP 150 1.6 THP 160 1.6 THP 165 2.0 BlueHDi 150	96 73 85 88 110 120 121 110	07/15→12/18 04/16→12/18 07/15→12/18 07/15→12/18 10/16→12/18 07/15→12/18 07/15→12/18 07/15→12/18	⬅		2	**11.8116-0356.1**	**390586**	ATE
2.0 BlueHDi 180	133	07/15→12/18	⬅	not for rim size [in]: 19	2	**11.8116-0356.1**	**390586**	ATE
Guide Bolt, brake caliper								
1.2 THP 130 1.6 BlueHDi 100 1.6 BlueHDi 115 1.6 BlueHDi 120 1.6 THP 150 1.6 THP 160 1.6 THP 165 1.6 THP 210 2.0 BlueHDi 150	96 73 85 88 110 120 121 155 110	07/15→12/18 04/16→12/18 07/15→12/18 07/15→12/18 10/16→12/18 07/15→12/18 07/15→12/18 07/15→12/18 07/15→12/18	⬅		2	**11.8171-0008.1**	**990049**	ATE
2.0 BlueHDi 180	133	07/15→12/18	⬅	not for rim size [in]: 19	2	**11.8171-0008.1**	**990049**	ATE
			⬅	Rim Size [in]: 19	2	**11.8171-0008.1**	**990049**	ATE
DS - DS 5 (KF_) 04/15→12/18								
Spring, brake caliper								
1.6 BlueHDi 115 1.6 BlueHDi 120 1.6 THP 165 1.6 THP 210 2.0 BlueHDi 135 2.0 BlueHDi 150 2.0 BlueHDi 180 2.0 Hybrid4 2.0 Hybrid4 4x4	85 88 121 155 100 110 133 147 120	06/15→12/18 06/15→12/18 07/15→12/18 04/15→12/18 06/15→12/18 04/15→12/18 04/15→12/18 04/15→12/18 04/15→12/18	⬅	Hub Diameter [mm]: 82	2	**11.8116-0356.1**	**390586**	ATE
Guide Bolt, brake caliper								
1.6 BlueHDi 115 1.6 BlueHDi 120 1.6 THP 165 1.6 THP 210	85 88 121 155	06/15→12/18 06/15→12/18 07/15→12/18 04/15→12/18	⬅		2	**11.8171-0008.1**	**990049**	ATE

© 2022 Continental Aftermarket & Services GmbH

	kW				! #			
DS - DS 5 (KF_) 04/15→12/18								
Guide Bolt, brake caliper								
2.0 BlueHDi 135	100	06/15→12/18	←		2	**11.8171-0008.1**	**990049**	ATE
2.0 BlueHDi 150	110	04/15→12/18						
2.0 BlueHDi 180	133	04/15→12/18						
2.0 Hybrid4	147	04/15→12/18						
2.0 Hybrid4 4x4	120	04/15→12/18						
DS - DS 7 Crossback (J_) 09/17→								
Guide Bolt, brake caliper								
1.5 BlueHDi 130	96	09/17→	←	for brake disc diameter [mm]: 304; →Orga 16246		**11.8171-0008.1**	**990049**	ATE
1.6 PureTech 165	121	07/18→						
1.6 PureTech 180	133	04/18→						
1.6 PureTech 225	165	09/17→						
2.0 BlueHDi 180	130	09/17→						
2.0 HDi 180	132	07/18→						
E-TENSE	133 - 147	10/19→						
E-TENSE 225	133 - 165	05/21→						
E-TENSE 4x4	147 - 221	05/19→						
PureTech 130	96	10/18→						
Brake Pad Set, disc brake								
1.5 BlueHDi 130	96	09/17→	←	for brake disc diameter [mm]: 304; →Orga 16246		**13.0460-7339.2**	**607339**	ATE + WE / - WK
1.6 PureTech 165	121	07/18→						
1.6 PureTech 180	133	04/18→						
1.6 PureTech 225	165	09/17→						
2.0 BlueHDi 180	130	09/17→						
2.0 HDi 180	132	07/18→						
E-TENSE	133 - 147	10/19→						
E-TENSE 225	133 - 165	05/21→						
E-TENSE 4x4	147 - 221	05/19→						
PureTech 130	96	10/18→						
FERRARI - 208/308 Coupe 09/74→10/90								
Guide Bolt, brake caliper								
308 GTB Qv	177	09/82→06/85	←		2	**11.8171-0008.1**	**990049**	ATE
308 GTS Qv	177	09/82→06/85	→		2	**11.8171-0008.1**	**990049**	ATE
FERRARI - 328 GTB 09/85→09/89								
Guide Bolt, brake caliper								
3.2	199	09/85→09/89	←	→ 08/89	2	**11.8171-0008.1**	**990049**	ATE
			→	→ 08/89	2	**11.8171-0008.1**	**990049**	ATE
FERRARI - 328 GTS 09/85→09/89								
Guide Bolt, brake caliper								
3.2	199	09/85→09/89	←	→ 08/89	2	**11.8171-0008.1**	**990049**	ATE
			→	→ 08/89	2	**11.8171-0008.1**	**990049**	ATE
FERRARI - MONDIAL 07/80→12/93								
Guide Bolt, brake caliper								
3.2 Quattrovalvole	199	10/85→12/88	←		2	**11.8171-0008.1**	**990049**	ATE
8 Quattrovalvole	177	10/82→07/87	→		2	**11.8171-0008.1**	**990049**	ATE
8	158	07/80→09/83	←	04/81→	2	**11.8171-0008.1**	**990049**	ATE
			→	04/81→	2	**11.8171-0008.1**	**990049**	ATE
FERRARI - MONDIAL Convertible 03/83→12/93								
Guide Bolt, brake caliper								
3.2 Quattrovalvole	199	09/85→12/88	←		2	**11.8171-0008.1**	**990049**	ATE
3.4 T	221	01/89→12/93	→		2	**11.8171-0008.1**	**990049**	ATE
8 Quattrovalvole	177	03/84→07/87						
FIAT - 500 (312_) 07/07→								
Guide Bolt, brake caliper								
0.9	44 - 63	07/10→			2	**11.8171-0008.1**	**990049**	ATE
1.0 Mild Hybrid	51	01/20→	←		2	**11.8171-0008.1**	**990049**	ATE

	kW				! #			
FIAT - 500 (312_) 07/07→								
Wheel Brake Cylinder								
0.9 1.2 LPG 1.3 D Multijet	44 - 63 51 57	07/10→ 12/10→ 06/16→	➡		2	**24.3220-1757.3**	**020605**	ALU
1.2 1.3 D Multijet	51 55 - 70	07/07→ 10/07→	➡	06/10→	2	**24.3220-1757.3**	**020605**	ALU
FIAT - 500 C (312_) 09/09→								
Guide Bolt, brake caliper								
0.9	44 - 63	09/09→			2	**11.8171-0008.1**	**990049**	ATE
1.0 Mild Hybrid	51	01/20→	⬅		2	**11.8171-0008.1**	**990049**	ATE
Wheel Brake Cylinder								
0.9 1.2 1.3 D Multijet	63 51 55 - 70	09/09→ 09/09→ 09/09→	➡	06/10→	2	**24.3220-1757.3**	**020605**	ALU
0.9	44 - 48	09/12→	➡		2	**24.3220-1757.3**	**020605**	ALU
FIAT - 500e (332_) 10/20→								
Guide Bolt, brake caliper								
Elektro Elektro 3+1	70 87	10/20→ 10/20→	⬅		2	**11.8171-0008.1**	**990049**	ATE
FIAT - 500e Convertible (332_) 10/20→								
Guide Bolt, brake caliper								
Elektro	70 - 87	10/20→	⬅		2	**11.8171-0008.1**	**990049**	ATE
FIAT - 500L (351_, 352_) 09/12→								
Guide Bolt, brake caliper								
1.4	88 - 119	09/13→		01/14→	2	**11.8171-0008.1**	**990049**	ATE
1.4 LPG 1.6 D Multijet	88 88	02/14→ 09/13→			2	**11.8171-0008.1**	**990049**	ATE
Wheel Brake Cylinder								
0.9 0.9 Natural Power 1.3 D Multijet 1.4 1.6 D Multijet	77 59 - 63 62 - 70 70 77	09/12→ 03/13→ 09/12→ 09/12→ 09/12→05/18	➡		2	**24.3220-1757.3**	**020605**	ALU
Accessory Kit, brake shoes								
0.9 0.9 Natural Power 1.3 D Multijet 1.4 1.6 D Multijet	77 59 - 63 62 - 70 70 77	09/12→ 03/13→ 09/12→ 09/12→ 09/12→05/18	➡			**03.0137-9309.2**	**669309**	AP
FIAT - 500X (334_) 09/14→								
Guide Bolt, brake caliper								
1.3 D Multijet 1.4 1.4 LPG 1.6 D Multijet	70 100 - 103 88 84 - 88	11/14→ 09/14→ 03/17→ 09/14→			2	**11.8171-0008.1**	**990049**	ATE
FIAT - CROMA (194_) 06/05→								
Spring, brake caliper								
1.8 16V 1.9 D Multijet 2.2 16V	103 85 - 88 108	12/05→ 06/05→ 06/05→	⬅	03/06→ 11/10	2	**11.8116-0356.1**	**390586**	ATE
1.9 D Multijet	100 - 110	06/05→	⬅	2060169→; → 11/10	2	**11.8116-0356.1**	**390586**	ATE

© 2022 Continental Aftermarket & Services GmbH

	kW				! #			
FIAT - CROMA (194_) 06/05→								
Guide Bolt, brake caliper								
1.8 16V	103	12/05→		01/06→ 02/06	2	**11.8171-0008.1**	**990049**	ATE
1.9 D Multijet	85 - 88	06/05→		→ 02/06	2	**11.8171-0008.1**	**990049**	ATE
2.2 16V	108	06/05→						
FIAT - CROMA Estate Van (194_) 04/06→12/11								
Spring, brake caliper								
1.9 MJTD	88	04/06→12/11	⬅	→ 11/10	2	**11.8116-0356.1**	**390586**	ATE
FIAT - DOBLO Box Body/MPV (223_) 11/00→								
Accessory Kit, brake shoes								
1.6 16V	76	10/01→	➡	02/04→ 09/05		**03.0137-9309.2**	**669309**	AP
1.6 Natural Power	76	09/02→						
1.9 JTD	74 - 77	10/01→						
1.6 Natural Power	68	02/04→07/09	➡	→ 09/05		**03.0137-9309.2**	**669309**	AP
FIAT - DOBLO Bus (263_) 11/09→								
Guide Bolt, brake caliper								
1.3 D Multijet	66 - 70	02/10→		for brake disc diameter [mm]: 305	2	**11.8171-0008.1**	**990049**	ATE
1.4	70 - 88	02/10→						
1.4 Natural Power	88	02/10→						
1.6 D Multijet	66 - 88	01/10→						
2.0 D Multijet	99	01/10→						
Accessory Kit, brake shoes								
1.3 D Multijet	66 - 70	02/10→	➡	Inner Br. Drum Diam. [in]: 10		**03.0137-9309.2**	**669309**	AP
1.4	70 - 88	02/10→						
1.4 Natural Power	88	02/10→						
1.6 D Multijet	66 - 88	01/10→						
2.0 D Multijet	99	01/10→						
FIAT - DOBLO Cargo (263_) 02/10→								
Guide Bolt, brake caliper								
1.3 D Multijet	55 - 70	02/10→		for brake disc diameter [mm]: 305	2	**11.8171-0008.1**	**990049**	ATE
1.4	70 - 88	02/10→						
1.4 Natural Power	88	06/10→						
1.6 D Multijet	66 - 88	02/10→						
2.0 D Multijet	99	02/10→						
Accessory Kit, brake shoes								
1.3 D Multijet	55 - 70	02/10→	➡	Inner Br. Drum Diam. [in]: 10		**03.0137-9309.2**	**669309**	AP
1.4	70 - 88	02/10→						
1.4 Natural Power	88	06/10→						
1.6 D Multijet	66 - 88	02/10→						
2.0 D Multijet	99	02/10→						
FIAT - DOBLO MPV (119_, 223_) 03/01→								
Accessory Kit, brake shoes								
1.3 JTD	55	05/05→	➡	→ 09/05		**03.0137-9309.2**	**669309**	AP
1.6	68	09/02→	➡	02/04→ 09/05		**03.0137-9309.2**	**669309**	AP
1.6 16V	76	10/01→						
1.6 Natural Power	76	09/02→						
1.9 JTD	74 - 77	10/01→						
FIAT - DOBLO Platform/Chassis (263_) 02/10→								
Guide Bolt, brake caliper								
1.3 D Multijet	55 - 70	02/10→		for brake disc diameter [mm]: 305	2	**11.8171-0008.1**	**990049**	ATE
1.4	70 - 88	04/10→						
1.4 Natural Power	88	06/10→						

	kW				! #			
FIAT - DOBLO Platform/Chassis (263_) 02/10→								
Guide Bolt, brake caliper								
1.6 D Multijet 2.0 D Multijet	66 - 88 99	02/10→ 02/10→		for brake disc diameter [mm]: 305	2	**11.8171-0008.1**	**990049**	ATE
Accessory Kit, brake shoes								
1.3 D Multijet 1.4 1.4 Natural Power 1.6 D Multijet 2.0 D Multijet	55 - 70 70 - 88 88 66 - 88 99	02/10→ 04/10→ 06/10→ 02/10→ 02/10→	➡	Inner Br. Drum Diam. [in]: 10		**03.0137-9309.2**	**669309**	AP
FIAT - DUCATO Bus (230_) 03/94→05/05								
Brake Shoe Set								
1.9 D 1.9 D Combinato 1.9 TD 1.9 TD Combinato 1.9 TD Panorama/ Combinato	50 51 66 59 60	04/98→04/02 06/95→04/02 04/98→04/02 08/94→04/02 03/94→04/02	➡	11/01→ 03/02; Payload [kg]: 1,000; not for motor home		**03.0137-0432.2**	**650432**	AP Ø 254 Width [mm] 57 + HEB
1.9 D	59	05/98→11/01	➡	11/01→; Payload [kg]: 1,000; not for motor home		**03.0137-0432.2**	**650432**	AP Ø 254 Width [mm] 57 + HEB
2.0 4x4	80	11/94→11/01	➡	11/01→; Payload from [kg] 1,000 Payload to [kg] 1,400; not for motor home		**03.0137-0432.2**	**650432**	AP Ø 254 Width [mm] 57 + HEB
2.0 JTD	62	10/01→04/02	➡	→ 03/02; Payload [kg]: 1,400; not for motor home		**03.0137-0432.2**	**650432**	AP Ø 254 Width [mm] 57 + HEB
2.0 Panorama/Combi-nato	80	03/94→04/02	➡	11/01→ 03/02; Payload from [kg] 1,000 Payload to [kg] 1,400; not for motor home		**03.0137-0432.2**	**650432**	AP Ø 254 Width [mm] 57 + HEB
2.5 D Combinato 2.5 TDI 4x4 2.5 TDI Panorama/ Combinato 2.8 D 2.8 JTD 2.8 JTD 4x4 2.8 TDI 2.8 TDI 4x4	62 85 80 - 85 64 94 94 90 90	08/94→04/02 04/97→04/02 03/94→04/02 02/98→04/02 11/00→04/02 11/00→04/02 10/97→04/02 07/99→04/02	➡	11/01→ 03/02; Payload [kg]: 1,400; not for motor home		**03.0137-0432.2**	**650432**	AP Ø 254 Width [mm] 57 + HEB
FIAT - DUCATO Bus (244_) 04/02→								
Brake Shoe Set								
2.0 2.0 Bipower 2.0 JTD 2.3 JTD 2.8 JTD 2.8 JTD 4x4	81 81 62 81 94 94	04/02→ 11/02→ 04/02→ 04/02→ 04/02→ 07/02→	➡	→ 07/06; Payload from [kg] 1,100 Payload to [kg] 1,500; not for motor home		**03.0137-0432.2**	**650432**	AP Ø 254 Width [mm] 57 + HEB
2.0 4x4 2.0 LPG 2.3 JTD 2.8 JTD 2.8 TD 2.8 TD 4x4	81 71 93 107 90 90	05/02→07/06 11/02→07/06 12/09→ 04/04→07/06 11/03→07/06 11/03→07/06	➡	Payload from [kg] 1,100 Payload to [kg] 1,500; not for motor home		**03.0137-0432.2**	**650432**	AP Ø 254 Width [mm] 57 + HEB
FIAT - DUCATO Platform/Chassis (230_) 03/94→04/02								
Brake Shoe Set								
1.9 D 1.9 TD 1.9 TD CAT	50 - 51 60 - 66 59	03/94→04/02 03/94→04/02 08/94→04/02	➡	11/01→ 03/02; Payload [kg]: 1,000; not for motor home		**03.0137-0432.2**	**650432**	AP Ø 254 Width [mm] 57 + HEB
1.9 TD	59	05/98→11/01	➡	11/01→; Payload [kg]: 1,000; not for motor home		**03.0137-0432.2**	**650432**	AP Ø 254 Width [mm] 57 + HEB
2.0	80	03/94→04/02	➡	11/01→ 03/02; Payload from [kg] 1,000 Payload to [kg] 1,400; not for motor home		**03.0137-0432.2**	**650432**	AP Ø 254 Width [mm] 57 + HEB
2.0 JTD	62	07/01→04/02	➡	10/01→ 03/02; Payload [kg]: 1,400; not for motor home		**03.0137-0432.2**	**650432**	AP Ø 254 Width [mm] 57 + HEB
2.5 D 2.5 D 4x4 2.5 TDI 2.5 TDI 4x4 2.8 D 2.8 JTD 2.8 JTD 4x4 2.8 TDI	62 62 80 85 64 94 94 90	03/94→04/02 03/94→04/02 03/94→04/02 06/98→04/02 02/98→04/02 11/00→04/02 10/01→04/02 12/98→04/02	➡	11/01→ 03/02; Payload [kg]: 1,400; not for motor home		**03.0137-0432.2**	**650432**	AP Ø 254 Width [mm] 57 + HEB

© 2022 Continental Aftermarket & Services GmbH

	kW				! #			
FIAT - DUCATO Platform/Chassis (244_) 04/02→								
Brake Shoe Set								
2.0 2.0 JTD 2.3 JTD 2.8 JTD 2.8 JTD 4x4 2.8 JTD Power	81 62 81 90 - 94 94 107	04/02→07/06 04/02→07/06 04/02→07/06 04/02→07/06 10/02→07/06 05/04→07/06	➡	Payload from [kg] 1,100 Payload to [kg] 1,500; not for motor home		**03.0137-0432.2**	**650432**	AP Ø 254 Width [mm] 57 + HEB
FIAT - DUCATO Van (230_) 03/94→05/05								
Brake Shoe Set								
1.9 D 1.9 TD 1.9 TD CAT	50 - 51 60 - 66 59	03/94→04/02 03/94→04/02 08/94→04/02	➡	11/01→ 03/02; Payload [kg]: 1,000; not for motor home		**03.0137-0432.2**	**650432**	AP Ø 254 Width [mm] 57 + HEB
1.9 TD	59	05/98→11/01	➡	11/01→; Payload [kg]: 1,000; not for motor home		**03.0137-0432.2**	**650432**	AP Ø 254 Width [mm] 57 + HEB
2.0 2.0 4x4	80 80	03/94→04/02 11/94→04/02	➡	11/01→ 03/02; Payload from [kg] 1,000 Payload to [kg] 1,400; not for motor home		**03.0137-0432.2**	**650432**	AP Ø 254 Width [mm] 57 + HEB
2.0 JTD	62	10/01→04/02	➡	→ 03/02; Payload [kg]: 1,400; not for motor home		**03.0137-0432.2**	**650432**	AP Ø 254 Width [mm] 57 + HEB
2.5 D 2.5 D 4x4 2.5 TDI 2.5 TDI 4x4 2.8 D 2.8 D 4x4 2.8 JTD 2.8 JTD 4x4 2.8 TDI 2.8 TDI 4x4	62 62 80 - 85 85 64 64 94 94 90 90	03/94→04/02 03/94→04/02 03/94→04/02 05/98→04/02 05/98→04/02 08/98→04/02 11/00→04/02 11/00→04/02 10/97→04/02 06/99→04/02	➡	11/01→ 03/02; Payload [kg]: 1,400; not for motor home		**03.0137-0432.2**	**650432**	AP Ø 254 Width [mm] 57 + HEB
FIAT - DUCATO Van (244_) 04/02→								
Brake Shoe Set								
2.0 2.0 Bipower 2.0 JTD 2.3 JTD 2.8 JTD 2.8 JTD 4x4 2.8 JTD Power	81 81 62 81 94 94 107	04/02→ 11/02→ 04/02→ 04/02→ 04/02→ 07/02→ 05/04→	➡	→ 07/06; Payload from [kg] 1,100 Payload to [kg] 1,500; not for motor home		**03.0137-0432.2**	**650432**	AP Ø 254 Width [mm] 57 + HEB
2.0 4x4 2.0 LPG 2.3 JTD 2.8 TD	81 71 93 90	05/02→07/06 11/02→07/06 09/09→12/18 04/02→07/06	➡	Payload from [kg] 1,100 Payload to [kg] 1,500; not for motor home		**03.0137-0432.2**	**650432**	AP Ø 254 Width [mm] 57 + HEB
FIAT - FIORINO Box Body/MPV (225_) 01/07→								
Accessory Kit, brake shoes								
1.3 D Multijet 1.4 1.4 Natural Power Ecargo	55 - 59 57 51 24	11/07→ 10/09→ 06/08→ 01/10→12/12	➡			**03.0137-9309.2**	**669309**	AP
1.3 D Multijet	70	07/09→	➡	07/10→		**03.0137-9309.2**	**669309**	AP
1.4	54	11/07→	➡	09/08→; for vehicles with reinforced brakes		**03.0137-9309.2**	**669309**	AP
1.4 Natural Power	57	06/08→	➡	10/09→		**03.0137-9309.2**	**669309**	AP
FIAT - FIORINO MPV (225_) 01/07→								
Accessory Kit, brake shoes								
1.4 1.4 CNG JTD Multijet	57 51 - 57 55 - 70	07/14→ 06/08→ 11/07→	➡			**03.0137-9309.2**	**669309**	AP
1.4	54	11/07→	➡	for vehicles with reinforced brakes		**03.0137-9309.2**	**669309**	AP
FIAT - FULLBACK Pickup (502_, 503_) 01/16→								
Brake Pad Set, disc brake								
2.4 D	113	04/16→	⬅			**13.0460-5631.2**	**605631**	24529 16,0 + WK

	kW				! #			
FIAT - FULLBACK Pickup (502_, 503_) 01/16→								
Brake Disc								
2.4 D 2.4 D 4x4 2.5 D 4x4	113 110 - 133 100	04/16→ 04/16→ 04/16→	←	for vehicles with height-adjustable suspension		**24.0128-0309.1**	**428309**	Ø 294 Brake Disc Thickness [mm] 28.2 Minimum thickness [mm] 26.4 Vented
FIAT - GRANDE PUNTO (199_) 06/05→								
Brake Caliper								
1.3 D Multijet 1.4 T-Jet 1.6 1.6 D Multijet 1.9 D Multijet	56 88 85 88 85 - 96	06/09→07/14 09/07→ 02/11→ 07/08→ 10/05→	→			**24.3367-1717.5**	**241405**	BOS without holder
			→			**24.3367-1718.5**	**241406**	BOS without holder
Accessory Kit, brake shoes								
1.2 1.3 D Multijet 1.4 1.4 16V 1.4 LPG 1.4 Natural Power	50 - 51 51 - 62 57 70 - 112 57 57	06/09→ 07/08→ 06/05→12/15 10/05→07/12 12/08→ 07/08→	→	→ 01/11		**03.0137-9309.2**	**669309**	AP
1.2 LPG	51	06/08→12/12	→	09/10→ 01/11		**03.0137-9309.2**	**669309**	AP
1.3 D Multijet	55	10/05→	→	04/08→ 01/11		**03.0137-9309.2**	**669309**	AP
1.3 D Multijet	56	06/09→07/14	→	→ 01/11		**03.0137-9309.2**	**669309**	AP
			→	10/09→		**03.0137-9309.2**	**669309**	AP
1.3 D Multijet 1.4 1.4 16V	66 55 66	10/05→12/10 10/05→07/07 06/09→07/14	→			**03.0137-9309.2**	**669309**	AP
FIAT - GRANDE PUNTO Van (199_) 10/05→06/13								
Accessory Kit, brake shoes								
1.3 JTD Multijet 1.4 1.4 LPG 1.4 Natural Power	55 57 57 57	02/06→06/13 02/06→06/13 03/09→12/12 03/09→12/12	→	→ 01/11		**03.0137-9309.2**	**669309**	AP
1.3 JTD Multijet	66	02/06→08/10	→			**03.0137-9309.2**	**669309**	AP
FIAT - IDEA (350_) 12/03→								
Accessory Kit, brake shoes								
1.3 D Multijet	66	10/05→	→	11/05→ 02/08		**03.0137-9309.2**	**669309**	AP
1.3 D Multijet	70	05/08→12/12	→	→ 07/12		**03.0137-9309.2**	**669309**	AP
1.9 JTD	74	01/04→	→	→ 02/08		**03.0137-9309.2**	**669309**	AP
FIAT - IDEA Van (350_) 12/03→								
Accessory Kit, brake shoes								
JTD Multijet MJTD	66 74	04/05→12/10 10/04→12/10	→			**03.0137-9309.2**	**669309**	AP
FIAT - LINEA (323_, 110_) 10/06→								
Accessory Kit, brake shoes								
1.3 D Multijet 1.3 JTD Multijet 1.4	66 63 57	06/07→ 10/06→ 06/07→	→	07/07→ 05/11		**03.0137-9309.2**	**669309**	AP
1.3 D Multijet 1.4	70 66	09/09→ 12/08→	→	→ 05/11		**03.0137-9309.2**	**669309**	AP
FIAT - PANDA (141_) 03/80→07/04								
Brake Shoe Set								
1000	32	01/86→04/92	→			**03.0137-0273.2**	**650273**	AP Ø 185 Width [mm] 31
			→	10/87→		**03.0137-0273.2**	**650273**	AP Ø 185 Width [mm] 31
1000	37	01/85→12/92	→	01/86→		**03.0137-0273.2**	**650273**	AP Ø 185 Width [mm] 31
			→	10/87→		**03.0137-0273.2**	**650273**	AP Ø 185 Width [mm] 31
1000 4x4 1100 900	32 - 37 37 29	01/86→12/94 05/91→12/99 04/92→12/96	→			**03.0137-0273.2**	**650273**	AP Ø 185 Width [mm] 31
1000 i.e. Cat	33	10/87→08/98	→			**03.0137-0273.2**	**650273**	AP Ø 185 Width [mm] 31

© 2022 Continental Aftermarket & Services GmbH

	kW				! #			
FIAT - PANDA (141_) 03/80→07/04								
Brake Shoe Set								
1000 i.e. Cat	33	10/87→08/98	➡	→ 12/92		**03.0137-0273.2**	**650273**	AP Ø 185 Width [mm] 31
1100 1100 4x4 1100 Trekking 4x4	40 40 37	02/95→09/03 02/95→07/04 10/91→07/04	➡	→ 12/02		**03.0137-0273.2**	**650273**	AP Ø 185 Width [mm] 31
750	25	01/86→10/03	➡	→ 12/97		**03.0137-0273.2**	**650273**	AP Ø 185 Width [mm] 31
900	33	10/80→06/94	➡	04/92→		**03.0137-0273.2**	**650273**	AP Ø 185 Width [mm] 31
950 4x4	35	09/83→12/86	➡	01/86→		**03.0137-0273.2**	**650273**	AP Ø 185 Width [mm] 31
FIAT - PANDA (169_) 09/03→								
Wheel Brake Cylinder								
1.1 1.2 1.3 D Multijet	40 44 - 51 51 - 55	09/03→ 09/03→ 09/03→	➡	06/10→ 06/13; + ABS	2	**24.3220-1757.3**	**020605**	ALU
FIAT - PANDA (312_, 319_) 02/12→								
Guide Bolt, brake caliper								
0.9 1.2 1.2 LPG	44 - 48 51 51	02/12→ 02/12→ 06/12→			2	**11.8171-0008.1**	**990049**	ATE
1.0 Mild Hybrid	51	01/20→	⬅		2	**11.8171-0008.1**	**990049**	ATE
Accessory Kit, brake shoes								
1.0 Mild Hybrid	51	01/20→	➡			**03.0137-9309.2**	**669309**	AP
FIAT - PANDA Hatchback Van (141_) 01/86→02/04								
Brake Shoe Set								
1.1 1.1 4x4 1000 i.e	40 40 33	09/00→02/04 09/00→02/04 08/92→02/04	➡	→ 12/02		**03.0137-0273.2**	**650273**	AP Ø 185 Width [mm] 31
1000	32	01/86→02/92	➡			**03.0137-0273.2**	**650273**	AP Ø 185 Width [mm] 31
			➡	10/87→		**03.0137-0273.2**	**650273**	AP Ø 185 Width [mm] 31
750	25	01/86→07/92	➡			**03.0137-0273.2**	**650273**	AP Ø 185 Width [mm] 31
FIAT - PANDA Hatchback Van (169_) 03/04→								
Wheel Brake Cylinder								
1.1 1.2 1.3 D Multijet	40 44 51 - 55	09/04→ 09/04→ 03/04→	➡	06/10→ 06/13; + ABS		**24.3220-1757.3**	**020605**	ALU
1.2	51	09/10→	➡	→ 06/13; + ABS		**24.3220-1757.3**	**020605**	ALU
1.2 Bipower	44	09/04→12/11	➡	06/10→; + ABS		**24.3220-1757.3**	**020605**	ALU
FIAT - PANDA VAN (312_, 519_) 02/12→								
Guide Bolt, brake caliper								
0.9 1.2 1.2 LPG	48 51 51	02/12→ 02/12→ 06/12→			2	**11.8171-0008.1**	**990049**	ATE
FIAT - PUNTO (188_) 09/99→07/12								
Brake Caliper								
1.2 Bifuel	44	08/07→03/12	➡			**24.3367-1717.5**	**241405**	BOS without holder
			➡			**24.3367-1718.5**	**241406**	BOS without holder
FIAT - PUNTO (199_) 01/12→								
Brake Caliper								
0.9	74 - 77	07/13→	➡			**24.3367-1717.5**	**241405**	BOS without holder
0.9 Bifuel 0.9 Twinair Turbo 1.2 1.3 D Multijet 1.3 JTD Multijet 1.4	63 63 49 - 51 55 - 70 66 55 - 57	03/12→ 03/12→ 03/12→ 03/12→ 05/18→ 03/12→	➡			**24.3367-1718.5**	**241406**	BOS without holder

	kW				! #			
FIAT - PUNTO (199_) 01/12→								
Brake Caliper								
1.4 Bifuel 1.4 Multi Air 1.4 Natural Power 1.4 Turbo Multi Air	57 77 57 99	03/12→ 03/12→ 03/12→ 03/12→				**24.3367-1717.5**	**241405**	BOS without holder
						24.3367-1718.5	**241406**	BOS without holder
Accessory Kit, brake shoes								
1.3 D Multijet 1.3 JTD Multijet 1.4 1.4 Multi Air 1.4 Turbo Multi Air	55 - 70 66 55 - 57 77 99	03/12→ 05/18→ 03/12→ 03/12→ 03/12→				**03.0137-9309.2**	**669309**	AP
FIAT - PUNTO EVO (199_) 07/08→								
Brake Caliper								
1.2	48 - 51	10/09→				**24.3367-1717.5**	**241405**	BOS without holder
1.3 D Multijet 1.4 1.4 16V 1.4 LPG 1.4 Natural Power 1.6 D Multijet	51 - 70 55 - 57 77 - 99 57 57 88	07/08→ 07/09→02/12 10/09→02/12 06/09→02/12 10/09→02/12 10/09→02/12				**24.3367-1718.5**	**241406**	BOS without holder
Accessory Kit, brake shoes								
1.3 D Multijet 1.4 1.4 16V	51 - 70 57 77 - 99	07/08→ 10/09→02/12 10/09→02/12				**03.0137-9309.2**	**669309**	AP
1.4	55	07/09→02/12		10/09→		**03.0137-9309.2**	**669309**	AP
FIAT - PUNTO EVO Hatchback Van (199_) 03/09→02/12								
Brake Caliper								
1.3 D Multijet	55 - 70	03/09→02/12				**24.3367-1717.5**	**241405**	BOS without holder
1.4	57	03/09→02/12				**24.3367-1718.5**	**241406**	BOS without holder
Accessory Kit, brake shoes								
1.3 D Multijet 1.4	55 - 70 57	03/09→02/12 03/09→02/12				**03.0137-9309.2**	**669309**	AP
FIAT - PUNTO Hatchback Van (199_) 04/08→								
Brake Caliper								
0.9 Twinair Turbo 1.3 D Multijet 1.4 1.4 LPG 1.4 Natural Power	63 62 - 70 57 57 57	03/12→ 03/09→ 03/12→ 03/12→ 03/09→				**24.3367-1717.5**	**241405**	BOS without holder
						24.3367-1718.5	**241406**	BOS without holder
Accessory Kit, brake shoes								
1.3 D Multijet	55	04/08→		→ 01/11		**03.0137-9309.2**	**669309**	AP
1.3 D Multijet 1.4	62 57	03/12→ 03/12→				**03.0137-9309.2**	**669309**	AP
1.3 D Multijet	70	03/09→		10/09→		**03.0137-9309.2**	**669309**	AP
FIAT - QUBO (225_) 02/08→								
Accessory Kit, brake shoes								
1.3 D Multijet 1.4 1.4 Natural Power	59 - 70 57 57	07/10→ 10/09→ 10/09→				**03.0137-9309.2**	**669309**	AP
1.3 D Multijet	55	02/08→		09/08→		**03.0137-9309.2**	**669309**	AP
1.4	54	02/08→		09/08→; for vehicles with reinforced brakes		**03.0137-9309.2**	**669309**	AP

© 2022 Continental Aftermarket & Services GmbH

	kW				! #			
FIAT - SEDICI (189_) 06/06→10/14								
Brake Pad Set, disc brake								
1.6 16V	79 - 88	06/06→10/14	➡			**13.0460-5929.2**	**605929**	AKE 21719 15,0 + WK
1.6 16V 4x4	79 - 88	06/06→10/14						
1.9 D Multijet	88	06/06→10/11						
1.9 D Multijet 4x4	88	06/06→10/11						
2.0 D Multijet	99	06/06→10/14						
2.0 D Multijet 4x4	99	06/06→10/14						
FIAT - TIPO Estate (356_) 03/16→								
Wheel Brake Cylinder								
1.0	74	11/20→	➡		2	**24.3220-1757.3**	**020605**	ALU
1.3 D	70	03/16→						
1.4	70 - 88	03/16→						
1.4 LPG	88	05/16→						
1.6	81	07/16→						
1.6 D	84 - 96	03/16→						
Accessory Kit, brake shoes								
1.0	74	11/20→	➡			**03.0137-9309.2**	**669309**	AP
1.3 D	70	03/16→						
1.4	70 - 88	03/16→						
1.4 LPG	88	05/16→						
1.6	81	07/16→						
1.6 D	84 - 96	03/16→						
FIAT - TIPO Hatchback (356_) 03/16→								
Wheel Brake Cylinder								
1.0	74	11/20→	➡		2	**24.3220-1757.3**	**020605**	ALU
1.3 D	70	03/16→						
1.4	70 - 88	03/16→						
1.4 LPG	88	05/16→						
1.6	81	07/16→						
1.6 D	84 - 96	03/16→						
Accessory Kit, brake shoes								
1.0	74	11/20→	➡			**03.0137-9309.2**	**669309**	AP
1.3 D	70	03/16→						
1.4	70 - 88	03/16→						
1.4 LPG	88	05/16→						
1.6	81	07/16→						
1.6 D	84 - 96	03/16→						
FIAT - TIPO Saloon (356_) 10/15→								
Wheel Brake Cylinder								
1.0	74	11/20→	➡		2	**24.3220-1757.3**	**020605**	ALU
1.3 D	70	10/15→						
1.4	70	10/15→						
1.4 LPG	88	05/16→						
1.6	81	10/15→						
1.6 D	84 - 88	10/15→						
Accessory Kit, brake shoes								
1.0	74	11/20→	➡			**03.0137-9309.2**	**669309**	AP
1.3 D	70	10/15→						
1.4	70	10/15→						
1.4 LPG	88	05/16→						
1.6	81	10/15→						
1.6 D	84 - 88	10/15→						
FIAT - ULYSSE (220_) 06/94→08/02								
Guide Bolt, brake caliper								
1.8	73	05/97→08/02		→ 07/02; + ABS	2	**11.8171-0008.1**	**990049**	ATE
1.9 TD	66	02/95→08/02						
2.0	89	06/94→08/02						
2.0 JTD	80	10/99→08/02						
1.9 TD	68	05/97→12/99		+ ABS	2	**11.8171-0008.1**	**990049**	ATE
2.0 16V	97	05/98→09/00			2	**11.8171-0008.1**	**990049**	ATE

	kW				! #			
FIAT - ULYSSE (220_) 06/94→08/02								
Guide Bolt, brake caliper								
2.0 16V 2.0 Turbo	100 108	09/00→08/02 06/94→08/02		→ 07/02	2	**11.8171-0008.1**	**990049**	ATE
2.0 JTD 16V	80	05/99→08/02		10/99→ 07/02; + ABS	2	**11.8171-0008.1**	**990049**	ATE
2.1 TD	80	03/96→10/99		06/96→; + ABS	2	**11.8171-0008.1**	**990049**	ATE
Accessory Kit, parking brake shoes								
1.8 1.9 TD 2.0 2.0 16V 2.0 JTD 2.0 Turbo	73 66 89 100 80 108	05/97→08/02 02/95→08/02 06/94→08/02 09/00→08/02 10/99→08/02 06/94→08/02		→ 07/02		**03.0137-9700.2**	**669700**	
1.9 TD 2.0 16V	68 97	05/97→12/99 05/98→09/00				**03.0137-9700.2**	**669700**	
2.0 JTD 16V	80	05/99→08/02		10/99→ 07/02		**03.0137-9700.2**	**669700**	
2.1 TD	80	03/96→10/99		06/96→		**03.0137-9700.2**	**669700**	
FIAT - UNO (146_) 01/83→12/13								
Brake Shoe Set								
1.0 1.7 D	42 43	05/93→06/01 11/94→08/00	➡	→ 06/95		**03.0137-0273.2**	**650273**	AP Ø 185 Width [mm] 31
1.1 50 1.1 50 i.e. 1.1 70 S 1.4	41 - 43 37 36 52	04/86→06/06 01/90→12/93 06/92→12/93 10/88→06/06	➡			**03.0137-0273.2**	**650273**	AP Ø 185 Width [mm] 31
1.9 D 45 1.0 50 1.1 60 1.1 60 Diesel 1.7 70 i.e. 1.4 70 TD 1.4 75 i.e. 1.5	44 32 37 42 42 53 52 55	09/89→03/94 06/86→12/93 01/86→12/89 04/89→12/92 09/89→12/93 09/89→12/93 10/86→10/90 10/85→12/93	➡	10/89→		**03.0137-0273.2**	**650273**	AP Ø 185 Width [mm] 31
45 i.e. 1.0 70 i.e. 1.4	33 51	10/84→10/95 09/89→07/96	➡	10/89→ 06/95		**03.0137-0273.2**	**650273**	AP Ø 185 Width [mm] 31
FIAT - UNO Van (146_) 02/88→12/13								
Brake Shoe Set								
1.7 D	43	02/88→02/92	➡	10/89→		**03.0137-0273.2**	**650273**	AP Ø 185 Width [mm] 31
45 0.9	33	02/88→07/96	➡	10/89→ 06/95		**03.0137-0273.2**	**650273**	AP Ø 185 Width [mm] 31
FORD - B-MAX (JK) 10/12→								
Brake Caliper								
1.0 EcoBoost	74 - 103	10/12→	⬅			**24.3541-1877.5**	**241413**	without holder
1.4 1.4 LPG 1.5 TDCi 1.6 TDCi 1.6 Ti	66 64 - 66 55 - 70 70 77	10/12→ 08/13→ 10/12→ 10/12→ 10/12→	⬅			**24.3541-1878.5**	**241414**	without holder
FORD - B-MAX Van (JK) 08/12→								
Brake Caliper								
1.0 EcoBoost	74 - 92	08/12→	⬅			**24.3541-1877.5**	**241413**	without holder
1.4 1.4 LPG 1.5 TDCi 1.6 TDCi 1.6 Ti	66 66 55 - 70 70 77	10/12→ 10/12→ 10/12→ 10/12→ 10/12→	⬅			**24.3541-1878.5**	**241414**	without holder
FORD - C-MAX (DM2) 02/07→09/10								
Spring, brake caliper								
1.6 1.6 TDCi 1.8 1.8 Flexifuel 1.8 TDCi 2.0	74 66 - 80 90 - 92 92 85 107	02/07→09/10 02/07→09/10 02/07→09/10 02/07→09/10 02/07→09/10 02/07→09/10	⬅	03/07→	2	**11.8116-0356.1**	**390586**	ATE

© 2022 Continental Aftermarket & Services GmbH

	kW				! #			
FORD - C-MAX (DM2) 02/07→09/10								
Spring, brake caliper								
2.0 TDCi	98 - 100	02/07→09/10	←	03/07→	2	**11.8116-0356.1**	**390586**	ATE
1.6 2.0 CNG 2.0 LPG 2.0 TDCi	85 107 107 81	04/07→09/10 04/09→09/10 06/08→09/10 02/08→09/10	←		2	**11.8116-0356.1**	**390586**	ATE
Guide Bolt, brake caliper								
1.6 1.6 TDCi 1.8 1.8 Flexifuel	74 66 - 80 90 - 92 92	02/07→09/10 02/07→09/10 02/07→09/10 02/07→09/10	← →	03/07→ 03/07→	2 2	**11.8171-0008.1** **11.8171-0008.1**	**990049** **990049**	ATE ATE
1.6	85	04/07→09/10	← →		2 2	**11.8171-0008.1** **11.8171-0008.1**	**990049** **990049**	ATE ATE
1.8 TDCi 2.0 2.0 TDCi	85 107 98 - 100	02/07→09/10 02/07→09/10 02/07→09/10	 ←	03/07→ 03/07→	2 2	**11.8171-0008.1** **11.8171-0008.1**	**990049** **990049**	ATE ATE
2.0 CNG 2.0 LPG 2.0 TDCi	107 107 81	04/09→09/10 06/08→09/10 02/08→09/10	 ←		2 2	**11.8171-0008.1** **11.8171-0008.1**	**990049** **990049**	ATE ATE
Brake Pad Set, disc brake								
1.6 1.6 TDCi 1.8 1.8 Flexifuel 2.0 2.0 CNG 2.0 LPG 2.0 TDCi	74 - 85 66 - 80 90 - 92 92 107 107 107 81 - 100	02/07→09/10 02/07→09/10 02/07→09/10 02/07→09/10 02/07→09/10 04/09→09/10 06/08→09/10 02/07→09/10	←			**13.0460-7193.2** **13.0470-7193.2**	**607193** **LD7193**	ATE 23723 18,1 - WE / - WK ATE 23723 18,1 - WE / - WK Ceramic
1.8 TDCi	85	02/07→09/10	←	03/07→		**13.0460-7193.2** **13.0470-7193.2**	**607193** **LD7193**	ATE 23723 18,1 - WE / - WK ATE 23723 18,1 - WE / - WK Ceramic
FORD - C-MAX II (DXA/CB7, DXA/CEU) 04/10→06/19								
Spring, brake caliper								
1.0 EcoBoost 1.5 EcoBoost 1.5 TDCi 1.5 TDCi ECOnetic 1.6 CNG 1.6 EcoBoost 1.6 Flexifuel 1.6 LPG 1.6 TDCi 1.6 Ti 2.0 TDCi	74 - 92 110 - 134 70 - 88 77 86 110 - 134 88 86 - 88 70 - 85 63 - 92 85 - 125	10/12→06/19 03/15→06/19 03/15→06/19 03/15→06/19 01/13→12/14 12/10→06/19 02/11→06/19 02/12→06/19 12/10→06/19 12/10→06/19 04/10→06/19			2	**11.8116-0356.1**	**390586**	ATE
Guide Bolt, brake caliper								
1.0 EcoBoost 1.5 EcoBoost 1.5 TDCi 1.5 TDCi ECOnetic 1.6 CNG 1.6 EcoBoost 1.6 Flexifuel 1.6 LPG 1.6 TDCi	74 - 92 110 - 134 70 - 88 77 86 110 - 134 88 86 - 88 70 - 85	10/12→06/19 03/15→06/19 03/15→06/19 03/15→06/19 01/13→12/14 12/10→06/19 02/11→06/19 02/12→06/19 12/10→06/19			2	**11.8171-0008.1**	**990049**	ATE

	kW				! #			
FORD - C-MAX II (DXA/CB7, DXA/CEU) 04/10→06/19								
Guide Bolt, brake caliper								
1.6 Ti	63 - 92	12/10→06/19			2	**11.8171-0008.1**	**990049**	ATE
2.0 TDCi	85 - 125	04/10→06/19						
Brake Pad Set, disc brake								
1.0 EcoBoost	74 - 92	10/12→06/19	←			**13.0460-7193.2**	**607193**	ATE 23723 18,1 - WE / - WK
						13.0470-7193.2	**LD7193**	ATE 23723 18,1 - WE / - WK Ceramic
1.5 EcoBoost	110 - 134	03/15→06/19						
1.5 TDCi	70 - 88	03/15→06/19						
1.5 TDCi ECOnetic	77	03/15→06/19						
1.6 CNG	86	01/13→12/14						
1.6 EcoBoost	110 - 134	12/10→06/19						
1.6 Flexifuel	88	02/11→06/19						
1.6 LPG	86 - 88	02/12→06/19						
1.6 TDCi	70 - 85	12/10→06/19						
1.6 Ti	63 - 92	12/10→06/19						
2.0 Energi	103 - 136	01/15→06/19						
2.0 TDCi	85 - 125	04/10→06/19						
FORD - C-MAX II Van 10/10→06/19								
Spring, brake caliper								
1.0 EcoBoost	74 - 92	10/12→06/19			2	**11.8116-0356.1**	**390586**	ATE
1.5 EcoBoost	110 - 134	03/15→06/19						
1.5 TDCi	88	03/15→06/19						
1.5 TDCi ECOnetic	77	03/15→06/19						
1.6 EcoBoost	110 - 134	12/10→06/19						
1.6 TDCi	70 - 85	12/10→06/19						
1.6 Ti	77	10/10→06/19						
2.0 TDCi	85 - 125	12/10→06/19						
Guide Bolt, brake caliper								
1.0 EcoBoost	74 - 92	10/12→06/19			2	**11.8171-0008.1**	**990049**	ATE
1.5 EcoBoost	110 - 134	03/15→06/19						
1.5 TDCi	88	03/15→06/19						
1.5 TDCi ECOnetic	77	03/15→06/19						
1.6 EcoBoost	110 - 134	12/10→06/19						
1.6 TDCi	70 - 85	12/10→06/19						
1.6 Ti	77	10/10→06/19						
2.0 TDCi	85 - 125	12/10→06/19						
Brake Pad Set, disc brake								
1.0 EcoBoost	74 - 92	10/12→06/19	←			**13.0460-7193.2**	**607193**	ATE 23723 18,1 - WE / - WK
						13.0470-7193.2	**LD7193**	ATE 23723 18,1 - WE / - WK Ceramic
1.5 EcoBoost	110 - 134	03/15→06/19						
1.5 TDCi	88	03/15→06/19						
1.5 TDCi ECOnetic	77	03/15→06/19						
1.6 EcoBoost	110 - 134	12/10→06/19						
1.6 TDCi	70 - 85	12/10→06/19						
1.6 Ti	77	10/10→06/19						
2.0 TDCi	85 - 125	12/10→06/19						
FORD - COUGAR (EC_) 08/98→12/01								
Guide Bolt, brake caliper								
2.0 16V	96	08/98→12/01	←	09/98→	2	**11.8171-0008.1**	**990049**	ATE
2.5 V6 24V	125	08/98→12/01						
2.5 ST 200	151	01/00→12/01	←		2	**11.8171-0008.1**	**990049**	ATE
2.5 V6 24V	125	06/00→12/01						

© 2022 Continental Aftermarket & Services GmbH

	kW				! #			
FORD - ECOSPORT 09/11→								
Brake Pad Set, disc brake								
1.0 EcoBoost	70 - 103	10/13→				**13.0460-7193.2**	**607193**	ATE 23723 18,1 - WE / - WK
						13.0470-7193.2	**LD7193**	ATE 23723 18,1 - WE / - WK Ceramic
1.5 EcoBlue TDCi	70 - 74	05/15→						
1.5 TDCi	66 - 74	10/13→						
1.5 TDCi EcoBlue	88 - 92	11/17→						
1.5 Ti	82	10/13→						
1.5 Ti-VCT	81	10/13→						
1.6 Ti-VCT	90	08/12→						
2.0 4x4	103	08/12→						
2.0 Ti-VCT 4x4	110	10/18→						
1.5 TDCi EcoBlue 4x4	92	11/17→		08/19→		**13.0460-7193.2**	**607193**	ATE 23723 18,1 - WE / - WK
1.5 Ti-VCT	90	01/18→				**13.0470-7193.2**	**LD7193**	ATE 23723 18,1 - WE / - WK Ceramic
FORD - ESCORT II Turnier 04/75→07/81								
Guide Bolt, brake caliper								
1.3	42	04/75→08/80		08/80→	2	**11.8171-0008.1**	**990049**	ATE
FORD - ESCORT III (GAA) 09/80→07/86								
Guide Bolt, brake caliper								
1.1	37 - 43	09/80→12/85			2	**11.8171-0008.1**	**990049**	ATE
1.3	51	09/80→12/85						
1.6	58 - 71	09/80→12/85						
1.6 D	40	02/84→12/85						
1.6 i	66	07/85→12/85						
1.6 RS Turbo	97	11/84→12/85						
1.6	48	05/83→07/86		→ 12/85	2	**11.8171-0008.1**	**990049**	ATE
1.6 XR3i	77	10/82→12/85		→ 10/82	2	**11.8171-0008.1**	**990049**	ATE
					2	**11.8171-0008.1**	**990049**	ATE
RS 1600i	85	05/82→12/85		09/84→	2	**11.8171-0008.1**	**990049**	ATE
FORD - ESCORT III Convertible (ALD) 09/83→12/85								
Guide Bolt, brake caliper								
1.3	51	09/83→12/85			2	**11.8171-0008.1**	**990049**	ATE
1.6	58	09/83→12/85						
1.6 i	77	09/83→12/85						
FORD - ESCORT III Express (AVA) 01/81→02/86								
Guide Bolt, brake caliper								
1.1	37	03/81→02/86		→ 12/85	2	**11.8171-0008.1**	**990049**	ATE
1.3	51	03/81→02/86						
1.6	61	03/81→02/86						
1.6 D	40	02/84→02/86						
FORD - ESCORT III Turnier (AWA) 09/80→12/85								
Guide Bolt, brake caliper								
1.1	37 - 40	09/80→12/85			2	**11.8171-0008.1**	**990049**	ATE
1.3	51	03/81→12/85						
1.6	58	09/80→12/85						
1.6 D	40	02/84→12/85						
FORD - ESCORT IV (GAF, AWF, ABFT) 03/83→10/94								
Guide Bolt, brake caliper								
1.1	37	12/85→07/90		01/86→	2	**11.8171-0008.1**	**990049**	ATE
1.3	44 - 51	01/86→07/90			2	**11.8171-0008.1**	**990049**	ATE
1.4	54 - 55	01/86→07/90						
1.6	58 - 65	01/86→07/90						
1.6 D	40	01/86→01/89						
1.6 i	66 - 75	01/86→07/90						
1.6 Turbo RS	97	01/86→07/90						
1.6 XR3i	77	01/86→08/89						
1.3	46	07/88→10/90		→ 08/90	2	**11.8171-0008.1**	**990049**	ATE
1.4	51	10/85→10/90		01/86→ 08/90	2	**11.8171-0008.1**	**990049**	ATE

	kW				! #			
FORD - ESCORT IV (GAF, AWF, ABFT) 03/83→10/94								
Guide Bolt, brake caliper								
1.8 D	44	01/89→07/90	←	04/89→	2	**11.8171-0008.1**	**990049**	ATE
FORD - ESCORT IV Convertible (ALF) 01/86→07/90								
Guide Bolt, brake caliper								
1.4	54 - 55	01/86→07/90	←		2	**11.8171-0008.1**	**990049**	ATE
1.6	58	01/86→12/87						
1.6 i	66 - 75	01/86→07/90						
1.6 XR3i	77	01/86→07/90						
FORD - ESCORT IV Express (AVF) 02/86→07/90								
Guide Bolt, brake caliper								
1.1	37	05/86→07/90	←		2	**11.8171-0008.1**	**990049**	ATE
1.3	44 - 46	02/86→07/90						
1.4 i	54	02/86→07/90						
1.6	60	02/86→07/90						
1.6 D	40	02/86→07/90	←	→ 03/89	2	**11.8171-0008.1**	**990049**	ATE
1.8 D	44	07/88→07/90	←	04/89→	2	**11.8171-0008.1**	**990049**	ATE
FORD - ESCORT IV Turnier (AWF, AVF) 10/85→10/90								
Guide Bolt, brake caliper								
1.1	37	10/85→09/90	←	01/86→ 08/90	2	**11.8171-0008.1**	**990049**	ATE
1.4	51	10/85→10/90						
1.3	44 - 51	01/86→07/90	←		2	**11.8171-0008.1**	**990049**	ATE
1.4	54	01/86→07/90						
1.6	58	01/86→07/90						
1.6 D	40	01/86→01/89						
1.6 i	66	01/86→07/90						
1.8 D	44	01/89→07/90	←	04/89→	2	**11.8171-0008.1**	**990049**	ATE
FORD - ESCORT V (AAL, ABL) 07/90→09/96								
Guide Bolt, brake caliper								
1.8 16V XR3i	96	02/92→01/95	←		2	**11.8171-0008.1**	**990049**	ATE
1.8 XR3i 16V 4x4	96	08/93→01/95						
RS 2000	110	05/91→01/95						
RS Cosworth 4x4	162	10/91→01/95						
FORD - ESCORT V Convertible (ALL) 07/90→01/95								
Guide Bolt, brake caliper								
1.8 16V XR3i	96	02/92→01/95	←		2	**11.8171-0008.1**	**990049**	ATE
FORD - ESCORT V Turnier (ANL) 07/90→01/95								
Guide Bolt, brake caliper								
1.8 i 16V	96	02/93→01/95	←		2	**11.8171-0008.1**	**990049**	ATE
FORD - ESCORT VI (GAL, AAL, ABL) 01/95→10/02								
Guide Bolt, brake caliper								
RS 2000	110	02/95→02/98	←	→ 12/95	2	**11.8171-0008.1**	**990049**	ATE
			←		2	**11.8171-0008.1**	**990049**	ATE
RS 2000 4x4	110	02/95→10/98	←		2	**11.8171-0008.1**	**990049**	ATE
RS Cosworth 4x4	162	02/95→10/98	←	→ 12/95	2	**11.8171-0008.1**	**990049**	ATE
FORD - ESCORT VI Convertible (ALL) 03/94→08/00								
Guide Bolt, brake caliper								
1.8 16V XR3i	96	02/95→08/00	←	→ 02/99	2	**11.8171-0008.1**	**990049**	ATE
FORD - FIESTA I (GFBT) 05/76→08/83								
Guide Bolt, brake caliper								
0.9	29 - 33	05/76→08/83	←	08/83→	2	**11.8171-0008.1**	**990049**	ATE
1.1	39 - 40	05/76→08/83						
1.3	49	08/77→08/83						
1.6 XR2	62	08/81→08/83		09/81→	2	**11.8171-0008.1**	**990049**	ATE
1.6 XR2	71	09/81→08/83			2	**11.8171-0008.1**	**990049**	ATE

© 2022 Continental Aftermarket & Services GmbH

	kW				! #			
FORD - FIESTA II (FBD) 09/83→11/89								
Guide Bolt, brake caliper								
1.0 1.1 1.4 1.6 D	33 36 - 37 52 - 54 40	09/83→02/89 09/83→02/89 10/86→02/89 04/84→02/89	←		2	**11.8171-0008.1**	**990049**	ATE
1.3	51	09/83→01/87	←	→ 08/86	2	**11.8171-0008.1**	**990049**	ATE
1.4	51	09/83→01/87	←	01/86→	2	**11.8171-0008.1**	**990049**	ATE
1.4	55	10/85→11/89	←	01/86→ 04/89	2	**11.8171-0008.1**	**990049**	ATE
1.6 XR2	70 - 71	03/84→02/89			2	**11.8171-0008.1**	**990049**	ATE
FORD - FIESTA III (GFJ) 01/89→01/97								
Guide Bolt, brake caliper								
1.0 1.3 1.4 1.6 i 16V 1.8 16V 1.8 TD 1.8 XR2i 16V	33 44 52 - 54 65 77 55 96	03/89→12/95 03/89→12/95 03/89→12/95 01/94→12/95 02/92→12/95 03/93→12/95 02/92→12/95		→ 10/95 11/95→	2 2	**11.8171-0008.1** **11.8171-0008.1**	**990049** **990049**	ATE ATE
1.1 1.8 D	37 - 40 44	03/89→12/95 03/89→12/95		05/89→ 10/95 11/95→	2 2	**11.8171-0008.1** **11.8171-0008.1**	**990049** **990049**	ATE ATE
1.3 1.6 1.6 Turbo 1.6 XR2i	44 65 - 66 96 76 - 81	03/89→12/92 01/89→01/94 03/90→10/92 03/89→01/94			2	**11.8171-0008.1**	**990049**	ATE
1.3 Cat 1.4	44 55	05/91→01/97 11/92→12/96		11/95→ 11/96 → 10/95	2 2	**11.8171-0008.1** **11.8171-0008.1**	**990049** **990049**	ATE ATE
FORD - FIESTA IV (JA_, JB_) 08/95→06/06								
Guide Bolt, brake caliper								
1.0 i 1.6 16V Sport	38 76	04/96→09/99 02/00→01/02	←		2	**11.8171-0008.1**	**990049**	ATE
1.0 i 1.4 i 16V	48 66	09/99→01/02 04/96→01/02	← ←	02/00→ → 01/00	2 2	**11.8171-0008.1** **11.8171-0008.1**	**990049** **990049**	ATE ATE
1.25 i 16V	55	08/95→01/02	← ← ←	01/96→ 01/00; Manual Transmission 01/96→ 01/00; Automatic Transmission 02/00→	2 2 2	**11.8171-0008.1** **11.8171-0008.1** **11.8171-0008.1**	**990049** **990049** **990049**	ATE ATE ATE
1.3 i 1.8 D	37 - 44 44	08/95→01/02 08/95→04/00	← ←	01/96→ 01/00 02/00→	2 2	**11.8171-0008.1** **11.8171-0008.1**	**990049** **990049**	ATE ATE
1.8 DI	55	04/00→01/02	← ←	- ABS + ABS	2 2	**11.8171-0008.1** **11.8171-0008.1**	**990049** **990049**	ATE ATE
FORD - FIESTA V (JH_, JD_) 11/01→12/14								
Guide Bolt, brake caliper								
1.25 16V 1.3 1.6 1.6 TDCi	51 - 55 55 72 66	05/02→06/08 01/02→12/04 05/02→06/08 11/04→06/08			2	**11.8171-0008.1**	**990049**	ATE
1.3 1.4 16V 1.4 TDCi 1.6 16V	44 - 51 59 50 74	11/01→06/08 11/01→06/08 11/01→06/08 11/01→06/08		04/02→	2	**11.8171-0008.1**	**990049**	ATE
FORD - FIESTA V Van 05/02→12/10								
Guide Bolt, brake caliper								
1.3 1.4	44 - 51 59	05/02→08/08 05/02→09/05			2	**11.8171-0008.1**	**990049**	ATE
1.4 TDCi 1.6 TDCi	50 66	10/03→12/10 04/07→09/09		→ 08/08	2	**11.8171-0008.1**	**990049**	ATE

	kW				! #			
FORD - FIESTA VI (CB1, CCN) 06/08→								
Brake Master Cylinder								
1.0	48 - 59	10/12→04/17		- ABS; for right-hand drive vehicles		**24.4120-1711.3**	**011093**	Ø 20.6 without brake fluid reservoir
1.0 EcoBoost	74 - 92	09/12→						
1.0 Sport	103	05/14→04/17						
1.25	44 - 60	06/08→04/17						
1.4	71	10/08→09/12						
1.4 LPG	68 - 71	01/09→04/17						
1.4 TDCi	50 - 51	01/09→09/12						
1.5 TDCi	55 - 70	09/12→04/17						
1.6	62 - 90	10/10→						
1.6 TDCi	55 - 70	06/08→12/15						
1.6 Ti	77 - 99	06/08→						
Brake Caliper								
1.0	48 - 59	10/12→04/17	←	for vehicles with disc brakes on the rear axle; ⊞		**24.3541-1877.5**	**241413**	without holder
1.0 EcoBoost	74 - 92	09/12→	←	for vehicles with disc brakes on the rear axle; ⊟		**24.3541-1878.5**	**241414**	without holder
1.0 Sport	103	05/14→04/17						
1.4	71	10/08→09/12						
1.4 LPG	68 - 71	01/09→04/17						
1.4 TDCi	50 - 51	01/09→09/12						
1.5 TDCi	55 - 70	09/12→04/17						
1.6	62 - 90	10/10→						
1.6 TDCi	55 - 70	06/08→12/15						
1.6 Ti	77 - 99	06/08→						
1.6 ST	134	03/13→04/17	←	⊞		**24.3541-1877.5**	**241413**	without holder
1.6 ST200	147	04/16→04/17	←	⊟		**24.3541-1878.5**	**241414**	without holder
FORD - FIESTA VI Van 08/08→								
Brake Master Cylinder								
1.0	48 - 59	10/12→		- ABS; for right-hand drive vehicles		**24.4120-1711.3**	**011093**	Ø 20.6 without brake fluid reservoir
1.0 EcoBoost	74 - 103	09/12→						
1.25	44 - 60	08/08→						
1.4	71	10/08→12/12						
1.4 TDCi	50 - 51	01/09→						
1.5 TDCi	55 - 70	10/12→						
1.6 TDCi	66 - 70	01/09→						
1.6 Ti-VCT	88	10/08→12/12						
Brake Caliper								
1.4	71	10/08→12/12	←	for vehicles with disc brakes on the rear axle; ⊞		**24.3541-1877.5**	**241413**	without holder
1.6 Ti-VCT	88	10/08→12/12						
			←	for vehicles with disc brakes on the rear axle; ⊟		**24.3541-1878.5**	**241414**	without holder
1.6 ST	134	03/13→	←	⊞		**24.3541-1877.5**	**241413**	without holder
			←	⊟		**24.3541-1878.5**	**241414**	without holder
FORD - FIESTA VII (HJ, HF) 05/17→								
Accessory Kit, brake shoes								
1.0 EcoBoost	63 - 103	05/17→	→			**03.0137-9317.2**	**669317**	
1.0 EcoBoost Active	74 - 103	04/18→						
1.0 EcoBoost mHEV	92 - 114	11/19→						
1.0 EcoBoost mHEV Active	92 - 114	01/21→						

© 2022 Continental Aftermarket & Services GmbH

	kW				! #			
FORD - FIESTA VII (HJ, HF) 05/17→								
Accessory Kit, brake shoes								
1.1 Ti-VCT	52 - 63	05/17→	➡			**03.0137-9317.2**	**669317**	
1.5 TDCi	63 - 88	05/17→						
1.5 TDCi Active	63 - 88	05/17→						
FORD - FIESTA VII Van 09/18→								
Accessory Kit, brake shoes								
1.0 EcoBoost	70 - 103	09/18→	➡			**03.0137-9317.2**	**669317**	
1.1 Ti-VCT	52 - 63	04/19→						
1.5 TDCi	63 - 88	09/18→						
FORD - FIESTA Box Body/MPV (F3L, F5L) 04/89→02/96								
Guide Bolt, brake caliper								
1.3	44	09/91→02/96		→ 10/95	2	**11.8171-0008.1**	**990049**	ATE
1.8 D	44	09/91→02/96		11/95→	2	**11.8171-0008.1**	**990049**	ATE
FORD - FIESTA Box Body/MPV (J5_, J3_) 02/96→								
Guide Bolt, brake caliper								
1.3	44	02/96→08/03	⬅	02/00→ 03/02	2	**11.8171-0008.1**	**990049**	ATE
1.8 D	44	02/96→04/02	⬅	→ 01/00	2	**11.8171-0008.1**	**990049**	ATE
1.4 i	66	04/96→10/99	⬅		2	**11.8171-0008.1**	**990049**	ATE
1.8 DI	55	09/00→08/03	⬅	→ 03/02; - ABS	2	**11.8171-0008.1**	**990049**	ATE
			⬅	→ 03/02; + ABS	2	**11.8171-0008.1**	**990049**	ATE
FORD - FIESTA Box Body/MPV (JV_) 05/98→08/03								
Guide Bolt, brake caliper								
D 1.8	44	05/98→04/02	⬅	02/00→ 03/02	2	**11.8171-0008.1**	**990049**	ATE
			⬅	→ 01/00	2	**11.8171-0008.1**	**990049**	ATE
FORD - FIESTA Hatchback Van (FVD) 03/83→12/95								
Guide Bolt, brake caliper								
1.0	33	08/83→11/89	⬅	→ 04/89	2	**11.8171-0008.1**	**990049**	ATE
1.4	52	09/86→09/89						
1.6 D	40	09/83→09/89	⬅	03/84→ 04/89	2	**11.8171-0008.1**	**990049**	ATE
1.8 D	43	03/89→12/95		09/91→ 10/95	2	**11.8171-0008.1**	**990049**	ATE
				11/95→	2	**11.8171-0008.1**	**990049**	ATE
FORD - FIESTA Hatchback Van (WFVT) 05/76→11/86								
Guide Bolt, brake caliper								
1.0	29	10/77→11/86	⬅	08/83→	2	**11.8171-0008.1**	**990049**	ATE
1.1	39	10/77→11/86						
FORD - FIESTA Saloon 09/00→12/14								
Guide Bolt, brake caliper								
1.0	70	09/04→12/06			2	**11.8171-0008.1**	**990049**	ATE
1.4 TDCi	50	05/02→11/11						
1.6	73	05/02→11/13						
FORD - FIESTA Saloon 04/10→								
Brake Master Cylinder								
1.4	70	10/10→		- ABS; for right-hand drive vehicles		**24.4120-1711.3**	**011093**	Ø 20.6 without brake fluid reservoir
1.6	62 - 81	09/10→						
1.6 Ti	77 - 88	04/10→						
Brake Caliper								
1.4	70	10/10→	⬅	for vehicles with disc brakes on the rear axle; ◪		**24.3541-1877.5**	**241413**	without holder
1.6	62 - 81	09/10→						
1.6 Ti	77 - 88	04/10→	⬅	for vehicles with disc brakes on the rear axle; ◪		**24.3541-1878.5**	**241414**	without holder

	kW				! #			
FORD - FOCUS I (DAW, DBW) 09/98→11/09								
Guide Bolt, brake caliper								
1.4 16V 1.6 1.8 16V BiFuel	55 76 85	10/98→09/99 07/03→06/07 09/02→07/04			2	**11.8171-0008.1**	**990049**	ATE
1.4 16V 1.6 16V 1.6 16V Flexifuel 1.8 16V 1.8 DI / TDDi 1.8 TDCi 1.8 Turbo DI / TDDi 2.0 16V	55 74 75 85 55 74 - 85 66 96	10/98→11/04 10/98→11/04 01/02→11/04 10/98→11/04 08/99→11/04 03/01→11/04 10/98→11/04 10/98→11/04		→ 09/04	2	**11.8171-0008.1**	**990049**	ATE
FORD - FOCUS I Estate Van (DNW) 08/98→03/05								
Guide Bolt, brake caliper								
1.4 1.6 1.8 1.8 TDCi 1.8 TDDi	55 74 85 74 - 85 55 - 66	04/99→03/05 04/99→03/05 04/99→03/05 08/01→03/05 08/98→03/05		→ 09/04	2	**11.8171-0008.1**	**990049**	ATE
FORD - FOCUS I Saloon (DFW) 02/99→11/09								
Guide Bolt, brake caliper								
1.4 16V 1.6 16V 1.8 16V 1.8 TDCi 1.8 Turbo DI / TDDi 2.0 16V	55 74 85 74 - 85 55 - 66 96	02/99→11/04 02/99→11/04 02/99→11/04 03/01→11/04 02/99→03/05 02/99→11/04		→ 09/04	2	**11.8171-0008.1**	**990049**	ATE
FORD - FOCUS I Turnier (DNW) 02/99→12/07								
Guide Bolt, brake caliper								
1.4 16V 1.6 16V 1.6 16V Flexifuel 1.8 16V 1.8 DI / TDDi 1.8 TDCi 1.8 Turbo DI / TDDi 2.0 16V	55 74 75 85 55 74 - 85 66 96	02/99→11/04 02/99→11/04 01/02→11/04 02/99→11/04 08/99→11/04 03/01→11/04 02/99→11/04 02/99→11/04		→ 09/04	2	**11.8171-0008.1**	**990049**	ATE
1.8 BiFuel	82	02/03→01/05			2	**11.8171-0008.1**	**990049**	ATE
FORD - FOCUS II (DA_, HCP, DP) 07/04→09/13								
Spring, brake caliper								
1.4 1.6 1.6 TDCi 1.6 Ti 2.0 2.0 TDCi	59 74 74 - 80 85 107 100	07/04→09/12 07/04→09/12 07/04→09/12 07/04→09/12 07/04→09/12 07/04→09/12		10/04→ 02/11	2	**11.8116-0356.1**	**390586**	ATE
1.6 2.0 2.0 Flex	81 104 107	01/10→09/12 06/05→09/08 10/08→03/10			2	**11.8116-0356.1**	**390586**	ATE
1.6 LPG 1.6 TDCi 1.8 1.8 Flexifuel 1.8 TDCi 2.0 CNG 2.0 LPG 2.0 TDCi	85 66 92 92 85 107 107 81	10/09→07/11 01/05→09/12 03/06→09/12 01/06→09/12 01/05→09/12 04/09→07/11 06/08→07/11 02/08→07/11		→ 02/11	2	**11.8116-0356.1**	**390586**	ATE
2.0 TDCi	98	07/04→01/08		10/04→	2	**11.8116-0356.1**	**390586**	ATE
Guide Bolt, brake caliper								
1.4 1.6 1.6 TDCi 1.6 Ti 2.0 2.0 TDCi	59 74 74 - 80 85 107 100	07/04→09/12 07/04→09/12 07/04→09/12 07/04→09/12 07/04→09/12 07/04→09/12		10/04→ 02/11	2	**11.8171-0008.1**	**990049**	ATE
1.6 2.0	81 104	01/10→09/12 06/05→09/08			2	**11.8171-0008.1**	**990049**	ATE

© 2022 Continental Aftermarket & Services GmbH

	kW				! #			
FORD - FOCUS II (DA_, HCP, DP) 07/04→09/13								
Guide Bolt, brake caliper								
2.0 Flex	107	10/08→03/10			2	**11.8171-0008.1**	**990049**	ATE
1.6 LPG 1.6 TDCi 1.8 1.8 Flexifuel 1.8 TDCi 2.0 CNG 2.0 LPG 2.0 TDCi 2.5 ST	85 66 92 92 85 107 107 81 166	10/09→07/11 01/05→09/12 03/06→09/12 01/06→09/12 01/05→09/12 04/09→07/11 06/08→07/11 02/08→07/11 10/05→09/12		→ 02/11	2	**11.8171-0008.1**	**990049**	ATE
2.0 TDCi	98	07/04→01/08		10/04→	2	**11.8171-0008.1**	**990049**	ATE
Brake Pad Set, disc brake								
1.4 1.6 1.6 LPG 1.6 TDCi 1.6 Ti 1.8 2.0 2.0 CNG 2.0 Flex 2.0 LPG 2.0 TDCi	59 81 85 74 - 80 85 92 104 - 107 107 107 107 98 - 100	07/04→09/12 01/10→09/12 10/09→07/11 07/04→09/12 07/04→09/12 03/06→09/12 07/04→09/12 04/09→07/11 10/08→03/10 06/08→07/11 07/04→09/12	←			**13.0460-7193.2** **13.0470-7193.2**	**607193** **LD7193**	ATE 23723 18,1 - WE / - WK ATE 23723 18,1 - WE / - WK Ceramic
1.6	74	07/04→09/12	←	10/04→ 02/11		**13.0460-7193.2** **13.0470-7193.2**	**607193** **LD7193**	ATE 23723 18,1 - WE / - WK ATE 23723 18,1 - WE / - WK Ceramic
1.6 TDCi 1.8 Flexifuel 1.8 TDCi 2.0 TDCi	66 92 85 81	01/05→09/12 01/06→09/12 01/05→09/12 02/08→07/11	←	→ 02/11		**13.0460-7193.2** **13.0470-7193.2**	**607193** **LD7193**	ATE 23723 18,1 - WE / - WK ATE 23723 18,1 - WE / - WK Ceramic
FORD - FOCUS II Convertible 10/06→09/10								
Spring, brake caliper								
1.6 2.0 2.0 TDCi	74 107 100	10/06→09/10 10/06→09/10 10/06→09/10	←		2	**11.8116-0356.1**	**390586**	ATE
Guide Bolt, brake caliper								
1.6 2.0 2.0 TDCi	74 107 100	10/06→09/10 10/06→09/10 10/06→09/10			2	**11.8171-0008.1**	**990049**	ATE
Brake Pad Set, disc brake								
1.6 2.0 2.0 TDCi	74 107 100	10/06→09/10 10/06→09/10 10/06→09/10	←			**13.0460-7193.2** **13.0470-7193.2**	**607193** **LD7193**	ATE 23723 18,1 - WE / - WK ATE 23723 18,1 - WE / - WK Ceramic
FORD - FOCUS II Estate Van 07/04→07/11								
Spring, brake caliper								
1.4 1.6 1.8 Flexifuel	59 74 92	09/05→07/11 09/05→07/11 06/09→07/11	←		2	**11.8116-0356.1**	**390586**	ATE
1.6 TDCi 1.6 Ti-VCT 2.0 TDCi	66 - 80 85 81 - 100	07/04→07/11 09/05→07/11 09/05→07/11	←	→ 02/11	2	**11.8116-0356.1**	**390586**	ATE
Guide Bolt, brake caliper								
1.4 1.6 1.8 Flexifuel	59 74 92	09/05→07/11 09/05→07/11 06/09→07/11			2	**11.8171-0008.1**	**990049**	ATE
1.6 TDCi 1.6 Ti-VCT 2.0 TDCi	66 - 80 85 81 - 100	07/04→07/11 09/05→07/11 09/05→07/11		→ 02/11	2	**11.8171-0008.1**	**990049**	ATE
Brake Pad Set, disc brake								
1.4 1.6 1.8 Flexifuel	59 74 92	09/05→07/11 09/05→07/11 06/09→07/11	←			**13.0460-7193.2** **13.0470-7193.2**	**607193** **LD7193**	ATE 23723 18,1 - WE / - WK ATE 23723 18,1 - WE / - WK Ceramic

	kW				! #			
FORD - FOCUS II Estate Van 07/04→07/11								
Brake Pad Set, disc brake								
1.6 TDCi	66 - 80	07/04→07/11		→ 02/11		**13.0460-7193.2**	**607193**	ATE 23723 18,1 - WE / - WK
1.6 Ti-VCT	85	09/05→07/11				**13.0470-7193.2**	**LD7193**	ATE 23723 18,1 - WE / - WK Ceramic
2.0 TDCi	81 - 100	09/05→07/11						
FORD - FOCUS II Saloon (DB_, FCH, DH) 04/05→								
Spring, brake caliper								
1.4	59	04/05→09/12		→ 02/11	2	**11.8116-0356.1**	**390586**	ATE
1.6	74	04/05→09/12						
1.6 TDCi	66 - 80	04/05→09/12						
1.6 Ti	85	04/05→09/12						
1.8	92	03/06→09/12						
1.8 Flexifuel	92	06/06→07/11						
1.8 TDCi	85	04/05→09/12						
2.0	107	04/05→07/11						
2.0 TDCi	81 - 100	04/05→09/12						
1.6	81	03/10→			2	**11.8116-0356.1**	**390586**	ATE
1.6 Flex	85	01/10→09/13						
1.8 Flexifuel	96	12/05→01/08		01/06→	2	**11.8116-0356.1**	**390586**	ATE
Guide Bolt, brake caliper								
1.4	59	04/05→09/12		→ 02/11	2	**11.8171-0008.1**	**990049**	ATE
1.6	74	04/05→09/12						
1.6 TDCi	66 - 80	04/05→09/12						
1.6 Ti	85	04/05→09/12						
1.8	92	03/06→09/12						
1.8 Flexifuel	92	06/06→07/11						
1.8 TDCi	85	04/05→09/12						
2.0	107	04/05→07/11						
2.0 TDCi	81 - 100	04/05→09/12						
1.6	81	03/10→			2	**11.8171-0008.1**	**990049**	ATE
1.6 Flex	85	01/10→09/13						
1.8 Flexifuel	96	12/05→01/08		01/06→	2	**11.8171-0008.1**	**990049**	ATE
Brake Pad Set, disc brake								
1.4	59	04/05→09/12		→ 02/11		**13.0460-7193.2**	**607193**	ATE 23723 18,1 - WE / - WK
1.6	74	04/05→09/12				**13.0470-7193.2**	**LD7193**	ATE 23723 18,1 - WE / - WK Ceramic
1.6 TDCi	66 - 80	04/05→09/12						
1.6 Ti	85	04/05→09/12						
1.8 Flexifuel	92	06/06→07/11						
1.8 TDCi	85	04/05→09/12						
2.0	107	04/05→07/11						
2.0 TDCi	81 - 100	04/05→09/12						
1.6	81	03/10→				**13.0460-7193.2**	**607193**	ATE 23723 18,1 - WE / - WK
1.6 Flex	85	01/10→09/13				**13.0470-7193.2**	**LD7193**	ATE 23723 18,1 - WE / - WK Ceramic
1.8	92	03/06→09/12						
1.8 Flexifuel	96	12/05→01/08						
FORD - FOCUS II Turnier (DA_, FFS, DS) 07/04→09/12								
Spring, brake caliper								
1.4	59	07/04→09/12		10/04→ 02/11	2	**11.8116-0356.1**	**390586**	ATE
1.6	74	07/04→07/11						
1.6 TDCi	74 - 80	07/04→09/12						
1.6 Ti	85	07/04→09/12						
2.0	107	07/04→09/12						
2.0 TDCi	100	07/04→09/12						
1.6 LPG	85	10/09→09/12		→ 02/11	2	**11.8116-0356.1**	**390586**	ATE
1.6 TDCi	81	12/07→09/12						
1.8	92	03/06→09/12						
1.8 Flexifuel	92	01/06→09/12						
2.0 LPG	107	06/08→07/11						
2.0 TDCi	81	02/08→07/11						
1.6 TDCi	66	07/04→09/12		01/05→ 02/11	2	**11.8116-0356.1**	**390586**	ATE
1.8 TDCi	85	07/04→09/12						
2.0 TDCi	98	07/04→01/08		10/04→	2	**11.8116-0356.1**	**390586**	ATE
Guide Bolt, brake caliper								
1.4	59	07/04→09/12		10/04→ 02/11	2	**11.8171-0008.1**	**990049**	ATE
1.6	74	07/04→07/11						
1.6 TDCi	74 - 80	07/04→09/12						

© 2022 Continental Aftermarket & Services GmbH

	kW				! #			
FORD - FOCUS II Turnier (DA_, FFS, DS) 07/04→09/12								
Guide Bolt, brake caliper								
1.6 Ti 2.0 2.0 TDCi	85 107 100	07/04→09/12 07/04→09/12 07/04→09/12		10/04→ 02/11	2	**11.8171-0008.1**	**990049**	ATE
1.6 LPG 1.6 TDCi 1.8 1.8 Flexifuel 2.0 LPG 2.0 TDCi	85 81 92 92 107 81	10/09→09/12 12/07→09/12 03/06→09/12 01/06→09/12 06/08→07/11 02/08→07/11		→ 02/11	2	**11.8171-0008.1**	**990049**	ATE
1.6 TDCi 1.8 TDCi	66 85	07/04→09/12 07/04→09/12		01/05→ 02/11	2	**11.8171-0008.1**	**990049**	ATE
2.0 TDCi	98	07/04→01/08		10/04→	2	**11.8171-0008.1**	**990049**	ATE
Brake Pad Set, disc brake								
1.4 1.6 1.6 LPG 1.6 TDCi 1.6 Ti 1.8 1.8 TDCi 2.0 2.0 LPG 2.0 TDCi	59 74 85 66 - 80 85 92 85 107 107 98 - 100	07/04→09/12 07/04→07/11 10/09→09/12 07/04→09/12 07/04→09/12 03/06→09/12 07/04→09/12 07/04→09/12 06/08→07/11 07/04→09/12	←			**13.0460-7193.2** **13.0470-7193.2**	**607193** **LD7193**	ATE 23723 18,1 - WE / - WK ATE 23723 18,1 - WE / - WK Ceramic
1.6 TDCi 1.8 Flexifuel 2.0 TDCi	81 92 81	12/07→09/12 01/06→09/12 02/08→07/11	←	→ 02/11		**13.0460-7193.2** **13.0470-7193.2**	**607193** **LD7193**	ATE 23723 18,1 - WE / - WK ATE 23723 18,1 - WE / - WK Ceramic
FORD - FOCUS III 07/10→								
Spring, brake caliper								
1.0 EcoBoost 1.5 EcoBoost 1.5 TDCi 1.5 TDCi ECOnetic 1.6 Flexifuel 1.6 LPG 1.6 TDCi ECOnetic 1.6 Ti 2.0 2.0 TDCi 2.0 TDCi ST 2.0 Ti-GDi Electric	74 - 92 110 - 134 70 - 88 77 110 86 - 88 77 63 - 88 110 - 119 110 136 125 107	02/12→12/17 09/14→12/17 09/14→12/17 09/14→12/17 07/13→ 02/12→ 05/12→ 08/11→12/17 09/11→12/17 11/14→12/17 11/14→12/17 08/11→ 07/13→12/17			2	**11.8116-0356.1**	**390586**	ATE
1.0 EcoBoost	103	10/17→06/19	←		2	**11.8116-0356.1**	**390586**	ATE
1.6 EcoBoost 1.6 Flexifuel 1.6 TDCi 1.6 Ti 2.0 TDCi	110 - 134 88 70 - 85 77 - 92 85 - 120	07/10→06/14 07/10→ 07/10→12/17 07/10→05/18 07/10→06/14		03/11→	2	**11.8116-0356.1**	**390586**	ATE
Guide Bolt, brake caliper								
1.0 EcoBoost	74 - 92	02/12→12/17		→ 05/17	2	**11.8171-0008.1**	**990049**	ATE
1.5 EcoBoost 1.5 TDCi 1.5 TDCi ECOnetic 1.6 Flexifuel 1.6 LPG 1.6 TDCi ECOnetic 1.6 Ti 2.0 2.0 ST 2.0 TDCi 2.0 TDCi ST	110 - 134 70 - 88 77 110 86 - 88 77 63 - 88 110 - 119 184 110 136	09/14→12/17 09/14→12/17 09/14→12/17 07/13→ 02/12→ 05/12→ 08/11→12/17 09/11→12/17 07/12→12/17 11/14→12/17 11/14→12/17			2	**11.8171-0008.1**	**990049**	ATE

	kW				! #			
FORD - FOCUS III 07/10→								
Guide Bolt, brake caliper								
2.0 Ti-GDi Electric	125 107	08/11→ 07/13→12/17		→ 05/17	2 2	**11.8171-0008.1** **11.8171-0008.1**	**990049** **990049**	ATE ATE
1.0 EcoBoost	103	10/17→06/19	⬅ ➡		2 2	**11.8171-0008.1** **11.8171-0008.1**	**990049** **990049**	ATE ATE
1.6 EcoBoost 2.0 TDCi	110 - 134 85 - 120	07/10→06/14 07/10→06/14		03/11→	2	**11.8171-0008.1**	**990049**	ATE
1.6 Flexifuel 1.6 TDCi 1.6 Ti	88 70 - 85 77 - 92	07/10→ 07/10→12/17 07/10→05/18		03/11→ 05/17 03/11→	2 2	**11.8171-0008.1** **11.8171-0008.1**	**990049** **990049**	ATE ATE
2.3 RS AWD	257	07/15→		→ 05/17	2	**11.8171-0008.1**	**990049**	ATE
Brake Pad Set, disc brake								
1.0 EcoBoost 1.5 EcoBoost 1.5 TDCi 1.5 TDCi ECOnetic 1.6 EcoBoost 1.6 Flexifuel 1.6 LPG 1.6 TDCi 1.6 TDCi ECOnetic 1.6 Ti 2.0 2.0 TDCi 2.0 Ti-GDi Electric	74 - 92 110 - 134 70 - 88 77 110 - 134 88 - 110 86 - 88 70 - 85 77 63 - 92 110 - 119 85 - 120 125 107	02/12→12/17 09/14→12/17 09/14→12/17 09/14→12/17 07/10→06/14 07/10→ 02/12→ 07/10→12/17 05/12→ 07/10→05/18 09/11→12/17 07/10→12/17 08/11→ 07/13→12/17	⬅			**13.0460-7193.2** **13.0470-7193.2**	**607193** **LD7193**	ATE 23723 18,1 - WE / - WK ATE 23723 18,1 - WE / - WK Ceramic
1.0 EcoBoost	103	10/17→06/19	⬅ ⬅	 Brake Caliper Colour: Red		**13.0460-7193.2** **13.0470-7193.2** **13.0470-7299.2**	**607193** **LD7193** **LD7299**	ATE 23723 18,1 - WE / - WK ATE 23723 18,1 - WE / - WK Ceramic ATE 25736 18,4 - WE / - WK Ceramic
2.0 ST	184	07/12→12/17	⬅			**13.0470-7299.2**	**LD7299**	ATE 25736 18,4 - WE / - WK Ceramic
2.0 TDCi ST	136	11/14→12/17	⬅ ⬅	 Brake Caliper Colour: Red		**13.0460-7193.2** **13.0470-7193.2** **13.0470-7299.2** **13.0470-7299.2**	**607193** **LD7193** **LD7299** **LD7299**	ATE 23723 18,1 - WE / - WK ATE 23723 18,1 - WE / - WK Ceramic ATE 25736 18,4 - WE / - WK Ceramic ATE 25736 18,4 - WE / - WK Ceramic
FORD - FOCUS III Estate Van 02/12→								
Spring, brake caliper								
1.0 EcoBoost 1.5 EcoBoost 1.5 TDCi 1.5 TDCi ECOnetic 2.0 TDCi	74 - 92 110 - 134 70 - 88 77 110	02/12→ 09/14→ 09/14→ 09/14→ 11/14→			2	**11.8116-0356.1**	**390586**	ATE
Guide Bolt, brake caliper								
1.0 EcoBoost 1.5 EcoBoost 1.5 TDCi 1.5 TDCi ECOnetic 2.0 TDCi	74 - 92 110 - 134 70 - 88 77 110	02/12→ 09/14→ 09/14→ 09/14→ 11/14→		→ 05/17 	2 2	**11.8171-0008.1** **11.8171-0008.1**	**990049** **990049**	ATE ATE

© 2022 Continental Aftermarket & Services GmbH

	kW				! #			
FORD - FOCUS III Estate Van 02/12→								
Brake Pad Set, disc brake								
1.0 EcoBoost	74 - 92	02/12→	←			**13.0460-7193.2**	**607193**	ATE 23723 18,1 - WE / - WK
1.5 EcoBoost	110 - 134	09/14→				**13.0470-7193.2**	**LD7193**	ATE 23723 18,1 - WE / - WK Ceramic
1.5 TDCi	70 - 88	09/14→						
1.5 TDCi ECOnetic	77	09/14→						
2.0 TDCi	110	11/14→						
FORD - FOCUS III Hatchback Van 01/11→								
Spring, brake caliper								
1.0 EcoBoost	74 - 92	02/12→			2	**11.8116-0356.1**	**390586**	ATE
1.5 EcoBoost	110 - 134	09/14→						
1.5 TDCi	70 - 88	09/14→						
1.5 TDCi ECOnetic	77	09/14→						
1.6 EcoBoost	110 - 134	11/11→06/14						
1.6 TDCi	85	02/12→						
2.0 TDCi	110	11/14→						
1.6 TDCi	70	01/11→		03/11→	2	**11.8116-0356.1**	**390586**	ATE
1.6 Ti	77	01/11→						
2.0 TDCi	85 - 120	01/11→06/14						
Guide Bolt, brake caliper								
1.0 EcoBoost	74 - 92	02/12→		→ 05/17	2	**11.8171-0008.1**	**990049**	ATE
1.5 EcoBoost	110 - 134	09/14→			2	**11.8171-0008.1**	**990049**	ATE
1.5 TDCi	70 - 88	09/14→						
1.5 TDCi ECOnetic	77	09/14→						
1.6 TDCi	85	02/12→						
2.0 TDCi	110	11/14→						
1.6 EcoBoost	110 - 134	11/11→06/14			2	**11.8171-0008.1**	**990049**	ATE
1.6 TDCi	70	01/11→		03/11→ 05/17	2	**11.8171-0008.1**	**990049**	ATE
1.6 Ti	77	01/11→		03/11→	2	**11.8171-0008.1**	**990049**	ATE
2.0 TDCi	85 - 120	01/11→06/14		03/11→	2	**11.8171-0008.1**	**990049**	ATE
Brake Pad Set, disc brake								
1.0 EcoBoost	74 - 92	02/12→	←			**13.0460-7193.2**	**607193**	ATE 23723 18,1 - WE / - WK
1.5 EcoBoost	110 - 134	09/14→				**13.0470-7193.2**	**LD7193**	ATE 23723 18,1 - WE / - WK Ceramic
1.5 TDCi	70 - 88	09/14→						
1.5 TDCi ECOnetic	77	09/14→						
1.6 EcoBoost	110 - 134	11/11→06/14						
1.6 TDCi	85	02/12→						
2.0 TDCi	110	11/14→						
1.6 TDCi	70	01/11→	←	03/11→		**13.0460-7193.2**	**607193**	ATE 23723 18,1 - WE / - WK
1.6 Ti	77	01/11→				**13.0470-7193.2**	**LD7193**	ATE 23723 18,1 - WE / - WK Ceramic
2.0 TDCi	85 - 120	01/11→06/14						
FORD - FOCUS III Saloon 07/10→								
Spring, brake caliper								
1.0 EcoBoost	74 - 92	02/12→			2	**11.8116-0356.1**	**390586**	ATE
1.5 EcoBoost	110 - 134	11/14→						
1.5 TDCi	70 - 88	11/14→						
1.5 TDCi ECOnetic	77	11/14→						
1.6 Flexifuel	110	07/13→						
1.6 TDCi	77	05/12→						
1.6 Ti	63	08/11→						
2.0	110	10/13→						
2.0 GDi	125	08/11→						
2.0 TDCi	110	11/14→						
1.0 EcoBoost	103	10/17→	←		2	**11.8116-0356.1**	**390586**	ATE
1.6 EcoBoost	110 - 134	07/10→		03/11→	2	**11.8116-0356.1**	**390586**	ATE
1.6 Flexifuel	88	07/10→						

	kW				! #			
FORD - FOCUS III Saloon 07/10→								
Spring, brake caliper								
1.6 TDCi	70 - 85	07/10→		03/11→	2	**11.8116-0356.1**	**390586**	ATE
1.6 Ti	77 - 92	07/10→						
2.0 TDCi	85 - 120	07/10→						
Guide Bolt, brake caliper								
1.0 EcoBoost	74 - 92	02/12→		→ 05/17	2	**11.8171-0008.1**	**990049**	ATE
1.5 EcoBoost	110 - 134	11/14→			2	**11.8171-0008.1**	**990049**	ATE
1.5 TDCi	70 - 88	11/14→						
1.5 TDCi ECOnetic	77	11/14→						
1.6 Flexifuel	110	07/13→						
1.6 TDCi	77	05/12→						
1.6 Ti	63	08/11→						
2.0	110	10/13→						
2.0 GDi	125	08/11→						
2.0 TDCi	110	11/14→						
1.0 EcoBoost	103	10/17→	←		2	**11.8171-0008.1**	**990049**	ATE
			→		2	**11.8171-0008.1**	**990049**	ATE
1.6 EcoBoost	110 - 134	07/10→		03/11→ 05/17	2	**11.8171-0008.1**	**990049**	ATE
1.6 Flexifuel	88	07/10→		03/11→	2	**11.8171-0008.1**	**990049**	ATE
1.6 TDCi	70 - 85	07/10→						
1.6 Ti	77 - 92	07/10→						
2.0 TDCi	85 - 120	07/10→						
Brake Pad Set, disc brake								
1.0 EcoBoost	74 - 92	02/12→	←			**13.0460-7193.2**	**607193**	ATE 23723 18,1 - WE / - WK
						13.0470-7193.2	**LD7193**	ATE 23723 18,1 - WE / - WK Ceramic
1.5 EcoBoost	110 - 134	11/14→						
1.5 TDCi	70 - 88	11/14→						
1.5 TDCi ECOnetic	77	11/14→						
1.6 EcoBoost	110 - 134	07/10→						
1.6 Flexifuel	88 - 110	07/10→						
1.6 TDCi	70 - 85	07/10→						
1.6 Ti	63 - 92	07/10→						
2.0	110	10/13→						
2.0 GDi	125	08/11→						
2.0 TDCi	85 - 120	07/10→						
1.0 EcoBoost	103	10/17→	←			**13.0460-7193.2**	**607193**	ATE 23723 18,1 - WE / - WK
						13.0470-7193.2	**LD7193**	ATE 23723 18,1 - WE / - WK Ceramic
			←	Brake Caliper Colour: Red		**13.0470-7299.2**	**LD7299**	ATE 25736 18,4 - WE / - WK Ceramic
2.0 TDCi	100	07/10→	←	03/11→		**13.0460-7193.2**	**607193**	ATE 23723 18,1 - WE / - WK
						13.0470-7193.2	**LD7193**	ATE 23723 18,1 - WE / - WK Ceramic
FORD - FOCUS III Turnier 07/10→								
Spring, brake caliper								
1.0 EcoBoost	74 - 92	02/12→			2	**11.8116-0356.1**	**390586**	ATE
1.5 EcoBoost	110 - 134	09/14→						
1.5 TDCi	70 - 88	09/14→						
1.5 TDCi ECOnetic	77	09/14→						
1.6 Flexifuel	110	07/13→						
1.6 LPG	86 - 88	02/12→						
1.6 TDCi ECOnetic	77	05/12→						
1.6 Ti	63 - 88	08/11→						
2.0	110	10/13→						
2.0 TDCi	110	11/14→						
2.0 TDCi ST	136	11/14→						

© 2022 Continental Aftermarket & Services GmbH

	kW				! #			
FORD - FOCUS III Turnier 07/10→								
Spring, brake caliper								
1.0 EcoBoost	103	10/17→	←		2	**11.8116-0356.1**	**390586**	ATE
1.6 EcoBoost 1.6 Flexifuel 1.6 TDCi 1.6 Ti 2.0 TDCi	110 - 134 88 70 - 85 77 - 92 85 - 120	07/10→ 07/10→ 07/10→ 07/10→ 07/10→		03/11→	2	**11.8116-0356.1**	**390586**	ATE
2.0 Ti-GDi	125	07/10→		08/11→	2	**11.8116-0356.1**	**390586**	ATE
Guide Bolt, brake caliper								
1.0 EcoBoost	74 - 92	02/12→		→ 05/17	2	**11.8171-0008.1**	**990049**	ATE
1.5 EcoBoost 1.5 TDCi 1.5 TDCi ECOnetic 1.6 Flexifuel 1.6 LPG 1.6 TDCi ECOnetic 1.6 Ti 2.0 2.0 ST 2.0 TDCi 2.0 TDCi ST	110 - 134 70 - 88 77 110 86 - 88 77 63 - 88 110 184 110 136	09/14→ 09/14→ 09/14→ 07/13→ 02/12→ 05/12→ 08/11→ 10/13→ 07/12→ 11/14→ 11/14→			2	**11.8171-0008.1**	**990049**	ATE
1.0 EcoBoost	103	10/17→	←		2	**11.8171-0008.1**	**990049**	ATE
			→		2	**11.8171-0008.1**	**990049**	ATE
1.6 EcoBoost	110 - 134	07/10→		03/11→ 05/17	2	**11.8171-0008.1**	**990049**	ATE
1.6 Flexifuel 1.6 TDCi 1.6 Ti 2.0 TDCi	88 70 - 85 77 - 92 85 - 120	07/10→ 07/10→ 07/10→ 07/10→		03/11→	2	**11.8171-0008.1**	**990049**	ATE
2.0 Ti-GDi	125	07/10→		08/11→ 05/17	2	**11.8171-0008.1**	**990049**	ATE
				08/11→	2	**11.8171-0008.1**	**990049**	ATE
Brake Pad Set, disc brake								
1.0 EcoBoost 1.5 EcoBoost 1.5 TDCi 1.5 TDCi ECOnetic 1.6 EcoBoost 1.6 Flexifuel 1.6 LPG 1.6 TDCi 1.6 TDCi ECOnetic 1.6 Ti 2.0 2.0 TDCi	74 - 92 110 - 134 70 - 88 77 110 - 134 88 - 110 86 - 88 70 - 85 77 63 - 92 110 85 - 120	02/12→ 09/14→ 09/14→ 09/14→ 07/10→ 07/10→ 02/12→ 07/10→ 05/12→ 07/10→ 10/13→ 07/10→	←			**13.0460-7193.2** **13.0470-7193.2**	**607193** **LD7193**	ATE 23723 18,1 - WE / - WK ATE 23723 18,1 - WE / - WK Ceramic
1.0 EcoBoost	103	10/17→	←			**13.0460-7193.2** **13.0470-7193.2**	**607193** **LD7193**	ATE 23723 18,1 - WE / - WK ATE 23723 18,1 - WE / - WK Ceramic
			←	Brake Caliper Colour: Red		**13.0470-7299.2**	**LD7299**	ATE 25736 18,4 - WE / - WK Ceramic
2.0 ST	184	07/12→	←			**13.0470-7299.2**	**LD7299**	ATE 25736 18,4 - WE / - WK Ceramic
2.0 TDCi	100	07/10→	←	03/11→		**13.0460-7193.2** **13.0470-7193.2**	**607193** **LD7193**	ATE 23723 18,1 - WE / - WK ATE 23723 18,1 - WE / - WK Ceramic
2.0 TDCi ST	136	11/14→	←			**13.0460-7193.2**	**607193**	ATE 23723 18,1 - WE / - WK

	kW				! #			
FORD - FOCUS III Turnier 07/10→								
Brake Pad Set, disc brake								
2.0 TDCi ST	136	11/14→	←			**13.0470-7193.2**	**LD7193**	ATE 23723 18,1 - WE / - WK Ceramic
						13.0470-7299.2	**LD7299**	ATE 25736 18,4 - WE / - WK Ceramic
			←	Brake Caliper Colour: Red		**13.0470-7299.2**	**LD7299**	ATE 25736 18,4 - WE / - WK Ceramic
2.0 Ti-GDi	125	07/10→	←	08/11→		**13.0460-7193.2**	**607193**	ATE 23723 18,1 - WE / - WK
						13.0470-7193.2	**LD7193**	ATE 23723 18,1 - WE / - WK Ceramic
FORD - FOCUS IV (HN) 01/18→								
Spring, brake caliper								
1.0 EcoBoost	63 - 92	01/18→	←		2	**11.8116-0356.1**	**390586**	ATE
1.5 EcoBlue	70 - 88	01/18→						
2.0 EcoBlue	110	01/18→						
Guide Bolt, brake caliper								
1.0 EcoBoost	63 - 92	01/18→	←		2	**11.8171-0008.1**	**990049**	ATE
1.5 EcoBlue	70 - 88	01/18→	→	- eFSB	2	**11.8171-0008.1**	**990049**	ATE
2.0 EcoBlue	110	01/18→						
Brake Pad Set, disc brake								
1.0 EcoBoost	63 - 92	01/18→	←	+ EU		**13.0460-7347.2**	**607347**	ATE + WK
						13.0470-7347.2	**LD7347**	ATE + WK Ceramic
1.5 EcoBlue	70 - 88	01/18→						
2.0 EcoBlue	110	01/18→						
1.0 EcoBoost mHEV	92 - 114	06/20→	←			**13.0460-7347.2**	**607347**	ATE + WK
						13.0470-7347.2	**LD7347**	ATE + WK Ceramic
1.0 EcoBoost mHEV Active	92	01/21→						
1.0 ECOBOOST MHEV ACTIVE	114	01/21→						
1.5 EcoBoost	110 - 134	09/18→						
1.5 Ti-VCT	90	11/18→						
Brake Disc								
1.0 EcoBoost	63 - 92	01/18→	→	Rigid Axle		**24.0111-0192.1**	**411192**	Ø 271 Brake Disc Thickness [mm] 11 Minimum thickness [mm] 9
1.0 EcoBoost mHEV	92 - 114	06/20→						
1.0 EcoBoost mHEV Active	92	01/21→						
1.0 ECOBOOST MHEV ACTIVE	114	01/21→						
1.5 EcoBlue	70 - 88	01/18→						
1.5 EcoBoost	110 - 134	09/18→						
1.5 Ti-VCT	90	11/18→						
2.0 EcoBlue	110	01/18→						
FORD - FOCUS IV Saloon (HM) 11/18→								
Spring, brake caliper								
1.0 EcoBoost	74 - 92	11/18→	←		2	**11.8116-0356.1**	**390586**	ATE
1.5 EcoBlue	70	11/18→						
Guide Bolt, brake caliper								
1.0 EcoBoost	74 - 92	11/18→	←		2	**11.8171-0008.1**	**990049**	ATE
1.5 EcoBlue	70	11/18→	→	- eFSB	2	**11.8171-0008.1**	**990049**	ATE
Brake Pad Set, disc brake								
1.0 EcoBoost	74 - 92	11/18→	←	+ EU		**13.0460-7347.2**	**607347**	ATE + WK
						13.0470-7347.2	**LD7347**	ATE + WK Ceramic
1.5 EcoBlue	70	11/18→						
1.5 EcoBlue	88	11/18→	←			**13.0460-7347.2**	**607347**	ATE + WK
1.5 EcoBoost	110	11/18→				**13.0470-7347.2**	**LD7347**	ATE + WK Ceramic
1.5 Ti-VCT	90	11/18→						

© 2022 Continental Aftermarket & Services GmbH

	kW				! #			
FORD - FOCUS IV Saloon (HM) 11/18→								
Brake Disc								
1.0 EcoBoost	74 - 92	11/18→	➡	Rigid Axle		**24.0111-0192.1**	**411192**	Ø 271 Brake Disc Thickness [mm] 11 Minimum thickness [mm] 9
1.5 EcoBlue	70 - 88	11/18→						
1.5 EcoBoost	110	11/18→						
1.5 Ti-VCT	90	11/18→						
FORD - FOCUS IV Turnier (HP) 09/18→								
Spring, brake caliper								
1.0 EcoBoost	63 - 92	09/18→	⬅		2	**11.8116-0356.1**	**390586**	ATE
1.5 EcoBlue	70 - 88	09/18→						
1.5 Ti-VCT	90	09/18→						
2.0 EcoBlue	110	09/18→						
Guide Bolt, brake caliper								
1.0 EcoBoost	63 - 92	09/18→	⬅		2	**11.8171-0008.1**	**990049**	ATE
1.5 EcoBlue	70 - 88	09/18→	➡	- eFSB	2	**11.8171-0008.1**	**990049**	ATE
1.5 Ti-VCT	90	09/18→						
2.0 EcoBlue	110	09/18→						
Brake Pad Set, disc brake								
1.0 EcoBoost	63 - 92	09/18→	⬅	+ EU		**13.0460-7347.2** **13.0470-7347.2**	**607347** **LD7347**	ATE + WK ATE + WK Ceramic
1.5 EcoBlue	70 - 88	09/18→						
1.5 Ti-VCT	90	09/18→						
2.0 EcoBlue	110	09/18→						
1.0 EcoBoost mHEV	92 - 114	07/20→	⬅			**13.0460-7347.2** **13.0470-7347.2**	**607347** **LD7347**	ATE + WK ATE + WK Ceramic
1.5 EcoBoost	110 - 134	09/18→						
Brake Disc								
1.0 EcoBoost	63 - 92	09/18→	➡	Rigid Axle		**24.0111-0192.1**	**411192**	Ø 271 Brake Disc Thickness [mm] 11 Minimum thickness [mm] 9
1.0 EcoBoost mHEV	92 - 114	07/20→						
1.5 EcoBlue	70 - 88	09/18→						
1.5 EcoBoost	110 - 134	09/18→						
1.5 Ti-VCT	90	09/18→						
2.0 EcoBlue	110	09/18→						
FORD - FOCUS C-MAX (DM2) 10/03→03/07								
Spring, brake caliper								
1.6	74	10/03→03/07	⬅		2	**11.8116-0356.1**	**390586**	ATE
1.6 TDCi	66 - 80	10/03→03/07						
1.6 Ti	85	08/04→03/07						
1.8	88 - 92	10/03→03/07						
1.8 Flexifuel	92	01/06→03/07						
1.8 TDCi	85	01/05→03/07						
2.0 TDCi	98 - 100	10/03→03/07						
2.0	107	03/04→03/07	⬅	04/04→	2	**11.8116-0356.1**	**390586**	ATE
Guide Bolt, brake caliper								
1.6	74	10/03→03/07			2	**11.8171-0008.1**	**990049**	ATE
1.6 TDCi	66 - 80	10/03→03/07						
1.6 Ti	85	08/04→03/07						
1.8	88 - 92	10/03→03/07						
1.8 Flexifuel	92	01/06→03/07						
1.8 TDCi	85	01/05→03/07						
2.0 TDCi	98 - 100	10/03→03/07						
2.0	107	03/04→03/07		04/04→	2	**11.8171-0008.1**	**990049**	ATE
Brake Pad Set, disc brake								
1.6	74	10/03→03/07	⬅			**13.0460-7193.2**	**607193**	ATE 23723 18,1 - WE / - WK
1.6 TDCi	66 - 80	10/03→03/07						

	kW				! #			
FORD - FOCUS C-MAX (DM2) 10/03→03/07								
Brake Pad Set, disc brake								
1.6 Ti 1.8 1.8 Flexifuel 1.8 TDCi 2.0 2.0 TDCi	85 88 - 92 92 85 107 98 - 100	08/04→03/07 10/03→03/07 01/06→03/07 01/05→03/07 03/04→03/07 10/03→03/07	←			**13.0470-7193.2**	**LD7193**	ATE 23723 18,1 - WE / - WK Ceramic
FORD - FUSION (JU_) 08/02→12/12								
Guide Bolt, brake caliper								
1.25 1.4 1.4 LPG 1.4 TDCi 1.6 TDCi	55 59 59 50 66	08/04→12/12 08/02→12/12 01/10→12/12 08/02→12/12 11/04→12/12		→ 09/12	2	**11.8171-0008.1**	**990049**	ATE
1.3 1.6	44 74	11/02→07/05 08/02→11/09			2	**11.8171-0008.1**	**990049**	ATE
FORD - GALAXY I (WGR) 03/95→05/06								
Guide Bolt, brake caliper								
1.9 TDI	66	03/95→05/06		01/96→ 04/01	2	**11.8171-0008.1**	**990049**	ATE
				05/01→ 04/06	2	**11.8171-0008.1**	**990049**	ATE
1.9 TDI	81	08/97→04/00		10/97→	2	**11.8171-0008.1**	**990049**	ATE
1.9 TDI	85	04/00→05/06		05/01→ 04/06	2	**11.8171-0008.1**	**990049**	ATE
2.0 i 2.3 16V	85 107	11/95→05/06 01/97→05/06		→ 04/01	2	**11.8171-0008.1**	**990049**	ATE
1.9 TDI 2.3 16V	96 103	02/03→05/06 09/01→05/06		→ 04/06	2	**11.8171-0008.1**	**990049**	ATE
1.9 TDI 2.8 i V6 2.8 i V6 4x4	110 128 128	05/05→05/06 11/95→04/00 04/96→04/00			2	**11.8171-0008.1**	**990049**	ATE
FORD - GALAXY II (WA6) 05/06→06/15								
Guide Bolt, brake caliper								
1.6 EcoBoost	118	11/10→06/15		02/11→	2	**11.8171-0008.1**	**990049**	ATE
1.6 TDCi 1.8 TDCi 2.0 2.0 EcoBoost 2.0 Flexifuel 2.0 TDCi 2.2 TDCi 2.3	85 74 - 92 107 146 - 149 107 85 - 120 147 118	02/11→06/15 05/06→06/15 05/06→06/15 03/10→06/15 05/06→06/15 05/06→06/15 11/10→06/15 09/07→06/15			2	**11.8171-0008.1**	**990049**	ATE
2.2 TDCi	129	03/08→12/12		04/08→ 10/08	2	**11.8171-0008.1**	**990049**	ATE
				11/08→	2	**11.8171-0008.1**	**990049**	ATE
FORD - GALAXY MK I VAN (WGR) 03/95→05/06								
Guide Bolt, brake caliper								
2.3	103	11/02→03/06			2	**11.8171-0008.1**	**990049**	ATE
FORD - GALAXY MK II VAN (WA6) 05/06→06/15								
Guide Bolt, brake caliper								
2.0 2.0 EcoBoost EcoBoost TDCi	107 149 118 85 - 147	05/06→06/15 03/10→06/15 02/11→06/15 05/06→06/15			2	**11.8171-0008.1**	**990049**	ATE
TDCi	85	01/07→06/15		02/11→	2	**11.8171-0008.1**	**990049**	ATE
FORD - GRAND C-MAX (DXA/CB7, DXA/CEU) 12/10→06/19								
Spring, brake caliper								
1.0 EcoBoost 1.5 EcoBoost 1.5 TDCi 1.6 EcoBoost 1.6 TDCi	74 - 92 110 - 134 70 - 88 110 - 134 70 - 85	10/12→06/19 03/15→06/19 03/15→06/19 12/10→06/19 12/10→06/19			2	**11.8116-0356.1**	**390586**	ATE

© 2022 Continental Aftermarket & Services GmbH

	kW				! #			
FORD - GRAND C-MAX (DXA/CB7, DXA/CEU) 12/10→06/19								
Spring, brake caliper								
1.6 Ti	63 - 92	12/10→06/19			2	**11.8116-0356.1**	**390586**	ATE
2.0 TDCi	85 - 125	12/10→06/19						
Guide Bolt, brake caliper								
1.0 EcoBoost	74 - 92	10/12→06/19			2	**11.8171-0008.1**	**990049**	ATE
1.5 EcoBoost	110 - 134	03/15→06/19						
1.5 TDCi	70 - 88	03/15→06/19						
1.6 EcoBoost	110 - 134	12/10→06/19						
1.6 TDCi	70 - 85	12/10→06/19						
1.6 Ti	63 - 92	12/10→06/19						
2.0 TDCi	85 - 125	12/10→06/19						
Brake Pad Set, disc brake								
1.0 EcoBoost	74 - 92	10/12→06/19	←			**13.0460-7193.2**	**607193**	ATE 23723 18,1 - WE / - WK
						13.0470-7193.2	**LD7193**	ATE 23723 18,1 - WE / - WK Ceramic
1.5 EcoBoost	110 - 134	03/15→06/19						
1.5 TDCi	70 - 88	03/15→06/19						
1.6 EcoBoost	110 - 134	12/10→06/19						
1.6 TDCi	70 - 85	12/10→06/19						
1.6 Ti	63 - 92	12/10→06/19						
2.0 TDCi	85 - 125	12/10→06/19						
FORD - GRAND C-MAX Van 12/10→06/19								
Spring, brake caliper								
1.0 EcoBoost	74 - 92	10/12→06/19			2	**11.8116-0356.1**	**390586**	ATE
1.5 EcoBoost	110	03/15→06/19						
1.5 TDCi	88	03/15→06/19						
1.6 EcoBoost	110 - 134	12/10→06/19						
1.6 TDCi	70 - 85	12/10→06/19						
1.6 Ti	92	12/10→12/14						
2.0 TDCi	103 - 125	12/10→06/19						
2.0 TDCI	85	02/11→06/19						
Guide Bolt, brake caliper								
1.0 EcoBoost	74 - 92	10/12→06/19			2	**11.8171-0008.1**	**990049**	ATE
1.5 EcoBoost	110	03/15→06/19						
1.5 TDCi	88	03/15→06/19						
1.6 EcoBoost	110 - 134	12/10→06/19						
1.6 TDCi	70 - 85	12/10→06/19						
1.6 Ti	92	12/10→12/14						
2.0 TDCi	103 - 125	12/10→06/19						
2.0 TDCI	85	02/11→06/19						
Brake Pad Set, disc brake								
1.0 EcoBoost	74 - 92	10/12→06/19	←			**13.0460-7193.2**	**607193**	ATE 23723 18,1 - WE / - WK
						13.0470-7193.2	**LD7193**	ATE 23723 18,1 - WE / - WK Ceramic
1.5 EcoBoost	110	03/15→06/19						
1.5 TDCi	88	03/15→06/19						
1.6 EcoBoost	110 - 134	12/10→06/19						
1.6 TDCi	70 - 85	12/10→06/19						
1.6 Ti	92	12/10→12/14						
2.0 TDCi	103 - 125	12/10→06/19						
2.0 TDCI	85	02/11→06/19						

	kW				! #			
FORD - KA 01/08→								
Wheel Brake Cylinder								
1.0	46 - 48	10/08→	➡	06/10→	2	**24.3220-1757.3**	**020605**	ALU
FORD - KA (RB_) 09/96→11/08								
Guide Bolt, brake caliper								
1.0 i 1.3 i	38 51	07/97→09/99 08/02→11/08	⬅		2	**11.8171-0008.1**	**990049**	ATE
1.0 i 1.3 i	48 36	09/99→11/08 06/98→11/08	⬅	02/00→	2	**11.8171-0008.1**	**990049**	ATE
			⬅	→ 01/00	2	**11.8171-0008.1**	**990049**	ATE
1.3 i	37 - 44	09/96→11/08	⬅	11/96→ 01/00	2	**11.8171-0008.1**	**990049**	ATE
			⬅	02/00→	2	**11.8171-0008.1**	**990049**	ATE
1.6 i	70	02/01→11/08		08/03→	2	**11.8171-0008.1**	**990049**	ATE
1.6 i	71	11/05→09/08			2	**11.8171-0008.1**	**990049**	ATE
FORD - KA (RU8) 10/08→05/16								
Wheel Brake Cylinder								
1.2 1.3 TDCi	51 55	10/08→05/16 10/08→05/16	➡	06/10→	2	**24.3220-1757.3**	**020605**	ALU
FORD - KA Van (RB) 05/02→05/05								
Guide Bolt, brake caliper								
1.3 1.3 i	51 44	09/02→03/04 05/02→05/05	⬅		2	**11.8171-0008.1**	**990049**	ATE
FORD - KUGA I 02/08→11/12								
Spring, brake caliper								
2.0 TDCi 2.0 TDCi 4x4	100 100	03/08→11/12 03/08→11/12	⬅	04/08→	2	**11.8116-0356.1**	**390586**	ATE
2.0 TDCi 2.0 TDCi 4x4 2.5 2.5 4x4	103 103 - 120 147 147	03/10→11/12 03/10→11/12 03/09→11/12 02/08→11/12	⬅		2	**11.8116-0356.1**	**390586**	ATE
Guide Bolt, brake caliper								
2.0 TDCi 2.0 TDCi 4x4	100 100	03/08→11/12 03/08→11/12		04/08→	2	**11.8171-0008.1**	**990049**	ATE
2.0 TDCi 2.0 TDCi 4x4 2.5 2.5 4x4	103 103 - 120 147 147	03/10→11/12 03/10→11/12 03/09→11/12 02/08→11/12			2	**11.8171-0008.1**	**990049**	ATE
Brake Pad Set, disc brake								
2.0 TDCi 2.0 TDCi 4x4 2.5 2.5 4x4	100 - 103 100 - 120 147 147	03/08→11/12 03/08→11/12 03/09→11/12 02/08→11/12	⬅			**13.0460-7193.2** **13.0470-7193.2**	**607193** **LD7193**	ATE 23723 18,1 - WE / - WK ATE 23723 18,1 - WE / - WK Ceramic
FORD - KUGA I VAN 02/08→11/12								
Spring, brake caliper								
2.5 TDCi TDCi 4x4	147 103 103 - 120	02/08→11/12 03/10→11/12 03/10→11/12	⬅		2	**11.8116-0356.1**	**390586**	ATE
Guide Bolt, brake caliper								
2.5 TDCi TDCi 4x4	147 103 103 - 120	02/08→11/12 03/10→11/12 03/10→11/12			2	**11.8171-0008.1**	**990049**	ATE
Brake Pad Set, disc brake								
2.5 TDCi TDCi 4x4	147 103 103 - 120	02/08→11/12 03/10→11/12 03/10→11/12	⬅			**13.0460-7193.2** **13.0470-7193.2**	**607193** **LD7193**	ATE 23723 18,1 - WE / - WK ATE 23723 18,1 - WE / - WK Ceramic

© 2022 Continental Aftermarket & Services GmbH

	kW				! #			
FORD - KUGA II (DM2) 05/12→								
Spring, brake caliper								
1.5 EcoBoost	88 - 110	09/14→06/19	←		2	**11.8116-0356.1**	**390586**	ATE
1.6 EcoBoost	110	03/13→09/14						
1.6 EcoBoost 4x4	110	03/13→09/14						
2.5	110 - 125	09/13→						
Guide Bolt, brake caliper								
1.5 EcoBoost	88 - 134	09/14→			2	**11.8171-0008.1**	**990049**	ATE
				- eFSB	2	**11.8171-0008.1**	**990049**	ATE
1.5 EcoBoost 4x4	110 - 134	09/14→						
1.5 TDCi	88	07/16→06/19						
1.6 EcoBoost	110	03/13→09/14						
1.6 EcoBoost 4x4	110 - 134	10/12→04/15						
2.0 TDCi	85 - 110	03/13→						
2.0 TDCi 4x4	100 - 132	03/13→						
2.5	110 - 125	09/13→						
Brake Pad Set, disc brake								
1.5 EcoBoost	88 - 110	09/14→06/19	←			**13.0460-7193.2**	**607193**	ATE 23723 18,1 - WE / - WK
						13.0470-7193.2	**LD7193**	ATE 23723 18,1 - WE / - WK Ceramic
1.6 EcoBoost	110	03/13→09/14						
2.5	110 - 125	09/13→						
1.5 EcoBoost	134	06/16→	←			**13.0470-7299.2**	**LD7299**	ATE 25736 18,4 - WE / - WK Ceramic
1.5 EcoBoost 4x4	110 - 134	09/14→						
1.5 EcoBoost E85	110	02/19→11/19						
1.5 TDCi	88	07/16→06/19						
1.6 EcoBoost 4x4	110 - 134	03/13→09/14						
2.0 4x4	179	03/13→06/16						
2.0 EcoBoost 4x4	169 - 178	08/17→						
2.0 TDCi	85 - 110	03/13→						
2.0 TDCi 4x4	100 - 132	03/13→						
1.6 EcoBoost 4x4	132	10/12→04/15	←	01/13→		**13.0470-7299.2**	**LD7299**	ATE 25736 18,4 - WE / - WK Ceramic
FORD - KUGA II VAN 05/12→								
Spring, brake caliper								
1.5 EcoBoost	88 - 110	09/14→	←		2	**11.8116-0356.1**	**390586**	ATE
1.5 EcoBoost 4x4	129	06/19→						
Guide Bolt, brake caliper								
1.5 EcoBoost	88 - 110	09/14→			2	**11.8171-0008.1**	**990049**	ATE
				- eFSB	2	**11.8171-0008.1**	**990049**	ATE
1.5 EcoBoost 4x4	129 - 134	09/14→						
1.5 TDCi	88	01/19→						
2.0 TDCi	88 - 110	09/14→						
2.0 TDCi 4x4	110 - 132	09/14→						
Brake Pad Set, disc brake								
1.5 EcoBoost	88	06/19→	←			**13.0460-7193.2**	**607193**	ATE 23723 18,1 - WE / - WK
1.5 EcoBoost 4x4	129	06/19→				**13.0470-7193.2**	**LD7193**	ATE 23723 18,1 - WE / - WK Ceramic
						13.0470-7299.2	**LD7299**	ATE 25736 18,4 - WE / - WK Ceramic
1.5 EcoBoost	110	09/14→	←			**13.0460-7193.2**	**607193**	ATE 23723 18,1 - WE / - WK
						13.0470-7193.2	**LD7193**	ATE 23723 18,1 - WE / - WK Ceramic
1.5 EcoBoost 4x4	134	09/14→	←			**13.0470-7299.2**	**LD7299**	ATE 25736 18,4 - WE / - WK Ceramic
1.5 TDCi	88	01/19→						
2.0 TDCi	88 - 110	09/14→						
2.0 TDCi 4x4	110 - 132	09/14→						

	kW				! #			
FORD - KUGA III (DFK) 07/19→								
Brake Pad Set, disc brake								
1.5 EcoBlue	88	07/19→	←			**13.0460-7347.2**	**607347**	ATE + WK
1.5 Ecoboost	110	07/19→				**13.0470-7347.2**	**LD7347**	ATE + WK Ceramic
1.5 EcoBoost	88 - 134	07/19→						
2.0 EcoBlue 4x4	110 - 140	07/19→						
2.0 EcoBlue mHEV	110	07/19→						
FORD - MONDEO I (GBP) 02/93→08/96								
Guide Bolt, brake caliper								
1.6 i 16V	65 - 66	02/93→08/96	←		2	**11.8171-0008.1**	**990049**	ATE
1.8 i 16V	82 - 85	02/93→08/96						
1.8 i 16V 4x4	85	02/93→08/96						
1.8 TD	65 - 66	06/93→08/96						
2.0 i 16V	97 - 100	02/93→08/96						
2.0 i 16V 4x4	97 - 100	04/93→08/96						
2.5 i 24V	125	07/94→08/96	←	08/94→	2	**11.8171-0008.1**	**990049**	ATE
FORD - MONDEO I Saloon (GBP) 01/93→08/96								
Guide Bolt, brake caliper								
1.6 i 16V	65 - 66	02/93→08/96	←		2	**11.8171-0008.1**	**990049**	ATE
1.8 4x4	85	02/93→08/96						
1.8 i 16V	82 - 85	02/93→08/96						
1.8 TD	65 - 66	06/93→08/96						
2.0 i 16V	100	02/93→08/96						
2.0 i 16V 4x4	97	12/94→08/96						
2.0 i 16V 4x4	100	02/93→08/96	←	04/93→	2	**11.8171-0008.1**	**990049**	ATE
2.5 i 24V	125	07/94→08/96	←	08/94→	2	**11.8171-0008.1**	**990049**	ATE
FORD - MONDEO I Turnier (BNP) 01/93→08/96								
Guide Bolt, brake caliper								
1.6 i 16V	65 - 66	04/93→08/96	←		2	**11.8171-0008.1**	**990049**	ATE
1.8 i 16V	82 - 85	04/93→08/96						
1.8 i 16V 4x4	85	04/93→08/96						
1.8 TD	65 - 66	06/93→08/96						
2.0 i 16V	97 - 100	01/93→08/96						
2.0 i 16V 4x4	97 - 100	04/93→08/96						
2.5 i 24V	125	07/94→08/96	←	08/94→	2	**11.8171-0008.1**	**990049**	ATE
FORD - MONDEO II (BAP) 08/96→09/00								
Guide Bolt, brake caliper								
1.6 i	66	08/96→09/00	←	10/96→	2	**11.8171-0008.1**	**990049**	ATE
1.8 i	85	08/96→09/00						
1.8 TD	66	08/96→09/00						
2.0 i	96	08/96→09/00						
1.6 i 16V	70	05/98→09/00	←		2	**11.8171-0008.1**	**990049**	ATE
2.5 24V	125	06/00→09/00						
2.5 ST 200	151	05/99→09/00						
2.5 24V	125	08/96→09/00	←	10/96→ 11/97	2	**11.8171-0008.1**	**990049**	ATE
			←	12/97→	2	**11.8171-0008.1**	**990049**	ATE
FORD - MONDEO II Saloon (BFP) 08/96→09/00								
Guide Bolt, brake caliper								
1.6 i	66	08/96→09/00	←	10/96→	2	**11.8171-0008.1**	**990049**	ATE
1.8 i	85	08/96→09/00						
1.8 TD	66	08/96→09/00						
2.0 i	96	08/96→09/00						
1.6 i 16V	70	05/98→09/00	←		2	**11.8171-0008.1**	**990049**	ATE
2.5 24V	125	06/00→09/00						
2.5 ST 200	151	05/99→09/00						
2.5 24V	125	08/96→09/00	←	10/96→ 11/97	2	**11.8171-0008.1**	**990049**	ATE
			←	12/97→	2	**11.8171-0008.1**	**990049**	ATE

© 2022 Continental Aftermarket & Services GmbH

	kW				! #			
FORD - MONDEO II Turnier (BNP) 08/96→09/00								
Guide Bolt, brake caliper								
1.6 i 1.8 i 1.8 TD 2.0 i	66 85 66 96	08/96→09/00 08/96→09/00 08/96→09/00 08/96→09/00	←	10/96→	2	**11.8171-0008.1**	**990049**	ATE
1.6 i 16V 2.5 24V 2.5 ST 200	70 125 151	05/98→09/00 10/99→09/00 05/99→09/00	←		2	**11.8171-0008.1**	**990049**	ATE
2.5 24V	125	08/96→09/00	←	10/96→ 11/97	2	**11.8171-0008.1**	**990049**	ATE
			←	12/97→	2	**11.8171-0008.1**	**990049**	ATE
FORD - MONDEO IV (BA7) 03/07→01/15								
Guide Bolt, brake caliper								
1.6 EcoBoost 1.6 TDCi 1.6 Ti 1.8 TDCi 2.0 EcoBoost 2.0 Flexifuel 2.0 LPG 2.0 SCTi 2.0 TDCi 2.3	118 85 88 92 176 107 107 149 85 - 120 118	02/11→01/15 02/11→01/15 07/10→01/15 06/07→01/15 07/10→01/15 03/09→01/15 07/09→01/15 03/10→01/15 03/07→01/15 07/07→01/15		→ 09/14	2	**11.8171-0008.1**	**990049**	ATE
1.6 Ti 1.8 TDCi 2.0 2.0 TDCi 2.5	81 - 92 74 107 96 - 103 162	03/07→01/15 03/07→01/15 03/07→01/15 03/07→01/15 03/07→01/15		04/07→ 09/14	2	**11.8171-0008.1**	**990049**	ATE
2.2 TDCi	129	03/08→10/10		04/08→	2	**11.8171-0008.1**	**990049**	ATE
2.2 TDCi	147	07/10→01/15		11/10→ 09/14	2	**11.8171-0008.1**	**990049**	ATE
FORD - MONDEO IV Saloon (BA7) 03/07→01/15								
Guide Bolt, brake caliper								
1.6 EcoBoost 1.6 TDCi	118 85	11/10→01/15 12/10→01/15		02/11→ 09/14	2	**11.8171-0008.1**	**990049**	ATE
1.6 Ti 1.8 TDCi 2.0 2.0 TDCi 2.5	81 - 92 74 107 96 - 103 162	03/07→01/15 03/07→01/15 03/07→01/15 03/07→01/15 03/07→01/15		04/07→ 09/14	2	**11.8171-0008.1**	**990049**	ATE
1.6 Ti 1.8 TDCi 2.0 Flexifuel 2.0 LPG 2.0 SCTI 2.0 TDCi 2.3	88 92 107 107 149 85 - 120 118	03/10→01/15 06/07→01/15 03/09→01/15 07/09→01/15 03/10→01/15 11/07→01/15 07/07→01/15		→ 09/14	2	**11.8171-0008.1**	**990049**	ATE
2.0 EcoBoost 2.0 TDCi	176 100	03/10→09/14 08/08→12/14			2	**11.8171-0008.1**	**990049**	ATE
2.2 TDCi	129	03/08→10/10		04/08→	2	**11.8171-0008.1**	**990049**	ATE
2.2 TDCi	147	10/10→01/15		11/10→ 09/14	2	**11.8171-0008.1**	**990049**	ATE
FORD - MONDEO IV Turnier (BA7) 03/07→01/15								
Guide Bolt, brake caliper								
1.6 EcoBoost 1.6 TDCi 1.6 Ti 2.0 EcoBoost 2.0 Flexifuel 2.0 LPG 2.0 SCTi 2.0 TDCi 2.3	118 85 88 176 107 107 149 85 - 120 118	02/11→01/15 02/11→01/15 07/10→01/15 07/10→01/15 03/09→01/15 07/09→01/15 03/10→01/15 03/07→01/15 07/07→01/15		→ 09/14	2	**11.8171-0008.1**	**990049**	ATE
1.6 Ti 1.8 TDCi 2.0 TDCi 2.5	81 - 92 74 96 162	03/07→12/12 03/07→12/12 03/07→12/12 03/07→12/12		04/07→	2	**11.8171-0008.1**	**990049**	ATE
1.8 TDCi	92	06/07→12/12			2	**11.8171-0008.1**	**990049**	ATE
2.0 2.0 TDCi	107 103	03/07→01/15 03/07→01/15		04/07→ 09/14	2	**11.8171-0008.1**	**990049**	ATE

	kW				! #			
FORD - MONDEO IV Turnier (BA7) 03/07→01/15								
Guide Bolt, brake caliper								
2.2 TDCi	129	03/08→10/10		04/08→	2	**11.8171-0008.1**	**990049**	ATE
2.2 TDCi	147	07/10→01/15		11/10→ 09/14	2	**11.8171-0008.1**	**990049**	ATE
FORD - MONDEO IV Van 03/07→01/15								
Guide Bolt, brake caliper								
1.6 EcoBoost	118	11/10→09/14			2	**11.8171-0008.1**	**990049**	ATE
1.6 TDCi	85	03/13→09/14						
2.0 EcoBoost	149 - 176	03/10→09/14						
2.0 TDCi	85 - 120	11/07→09/14						
2.2 TDCi	147	03/13→09/14						
2.0	107	03/07→09/14		04/07→	2	**11.8171-0008.1**	**990049**	ATE
2.0 TDCi	103	03/07→09/14						
FORD - ORION I (AFD) 07/83→03/86								
Guide Bolt, brake caliper								
1.3	51	07/83→03/86	←	→ 12/85	2	**11.8171-0008.1**	**990049**	ATE
1.6	58	07/83→03/86						
1.6 D	40	02/84→03/86						
FORD - ORION II (AFF) 12/85→07/90								
Guide Bolt, brake caliper								
1.3	44	12/85→07/90	←	01/86→	2	**11.8171-0008.1**	**990049**	ATE
1.4	55	12/85→07/90						
1.6	66	12/85→07/90						
1.6 D	40	12/85→01/89						
1.3	51	11/86→07/88	←		2	**11.8171-0008.1**	**990049**	ATE
1.4	52 - 54	01/86→07/90						
1.4 Cat	54	02/87→07/90						
1.6	65	03/86→07/90						
1.6 i	75	02/86→07/90						
1.6 i Cat	66	03/86→07/90						
1.8 D	44	01/89→07/90	←	04/89→	2	**11.8171-0008.1**	**990049**	ATE
FORD - ORION III (GAL) 01/90→09/96								
Guide Bolt, brake caliper								
1.8 i 16V	96	01/92→12/93	←		2	**11.8171-0008.1**	**990049**	ATE
FORD - PUMA (EC_) 03/97→06/02								
Guide Bolt, brake caliper								
1.4 16V	66	11/97→10/00	←	02/98→ 01/00	2	**11.8171-0008.1**	**990049**	ATE
			←	02/00→	2	**11.8171-0008.1**	**990049**	ATE
1.6 16V	76	08/00→06/02	←	→ 12/01	2	**11.8171-0008.1**	**990049**	ATE
1.7 16V	92	03/97→06/02	←	06/97→ 01/00	2	**11.8171-0008.1**	**990049**	ATE
			←	02/00→ 12/01	2	**11.8171-0008.1**	**990049**	ATE
Racing ST 160	114	06/99→06/02	←	02/00→ 12/01	2	**11.8171-0008.1**	**990049**	ATE
			←	→ 01/00	2	**11.8171-0008.1**	**990049**	ATE
FORD - PUMA (J2K, CF7) 09/19→								
Brake Pad Set, disc brake								
1.5 ST EcoBoost	147	11/20→	←	→ 08/21		**13.0460-7347.2**	**607347**	ATE + WK
						13.0470-7347.2	**LD7347**	ATE + WK Ceramic
FORD - RANGER (ER, EQ, R_) 04/97→12/11								
Wheel Brake Cylinder								
1.8	85	06/99→02/02	→		2	**24.3223-1711.3**	**020570**	GG
2.2	78	03/02→09/05						
2.5 D	57	10/99→04/02						
2.5 D 4x4	57	10/99→04/02						
2.5 TD	62	04/02→06/06						
2.5 TD 4x4	62 - 80	10/99→06/06						
2.5 TDdi	86	04/02→09/05						
2.5 TDdi 4x4	86	04/02→09/05						
2.6	80	10/02→09/04						
2.9 D	70	06/99→02/02						
3.0	109	06/99→06/06						
4.0 4x4	152	10/05→06/06						

© 2022 Continental Aftermarket & Services GmbH

	kW				! #			
FORD - RANGER (ET) 01/05→07/12								
Wheel Brake Cylinder								
2.2 2.5 TDCi 4x4 2.5 TDdi 2.5 TDi 4x4 3.0 TDCi 4x4	68 105 105 80 115	06/07→01/09 05/06→07/12 05/06→07/12 06/07→07/12 05/06→07/12	➡		2	**24.3223-1711.3**	**020570**	GG
3.0 TDCi	115	05/06→07/12	➡	04/10→ 10/11	2	**24.3223-1711.3**	**020570**	GG
FORD - RANGER (TKE) 04/11→								
Brake Pad Set, disc brake								
2.0 EcoBlue 4x4 2.0 EcoBlue Rear-Wheel Drive 2.2 TDCi 2.2 TDCi 4x4 2.5 i 2.5 i 4x4	96 - 157 132 96 - 118 96 - 118 122 122	09/18→ 09/18→ 11/11→ 05/15→ 11/11→ 11/11→	⬅			**13.0460-8014.2**	**608014**	25632 15,5 + WK + Zub
2.2 TDCi 2.2 TDCi 4x4 3.2 TDCi 4x4	88 - 92 92 - 110 147	04/11→ 04/11→ 04/11→	⬅	11/11→		**13.0460-8014.2**	**608014**	25632 15,5 + WK + Zub
Brake Disc								
2.0 EcoBlue 4x4 2.0 EcoBlue Rear-Wheel Drive 2.2 TDCi 2.2 TDCi 4x4 2.5 i 2.5 i 4x4 3.2 TDCi 4x4	96 - 157 132 88 - 118 92 - 118 122 122 147	09/18→ 09/18→ 04/11→ 04/11→ 11/11→ 11/11→ 04/11→	⬅			**24.0132-0176.1**	**432176**	Ø 302 Brake Disc Thickness [mm] 32 Minimum thickness [mm] 30 Vented
Wheel Brake Cylinder								
2.2 TDCi 2.2 TDCi 4x4 3.2 TDCi 4x4	88 - 92 92 - 110 147	04/11→ 04/11→ 04/11→	➡	11/11→; - ABS	2	**24.3223-1711.3**	**020570**	GG
2.2 TDCi 2.2 TDCi 4x4 2.5 i 2.5 i 4x4	96 - 118 96 - 118 122 122	11/11→ 05/15→ 11/11→ 11/11→	➡	- ABS	2	**24.3223-1711.3**	**020570**	GG
FORD - SCORPIO I (GAE, GGE) 04/85→09/94								
Guide Bolt, brake caliper								
2.0 2.0 i 2.4 i 2.8 i	77 74 - 85 96 110	04/85→08/89 10/85→09/94 09/86→09/88 04/85→11/86	⬅		2	**11.8171-0008.1**	**990049**	ATE
2.0 i 2.4 i 2.4 i Cat 2.5 D 2.9 i Cat	85 - 88 92 92 51 107	04/85→09/94 10/88→02/92 10/88→09/94 12/85→02/92 10/87→09/94	⬅	→ 01/92	2	**11.8171-0008.1**	**990049**	ATE
2.5 TD 2.9 i 2.9 i 24V	68 107 - 110 143	06/88→07/93 09/86→09/94 04/91→09/94	⬅ ⬅	02/92→ → 01/92	2 2	**11.8171-0008.1** **11.8171-0008.1**	**990049** **990049**	ATE ATE
2.9 i 4x4	107 - 110	09/86→09/94	⬅	02/92→	2	**11.8171-0008.1**	**990049**	ATE
FORD - SCORPIO I Saloon (GGE) 01/86→12/94								
Guide Bolt, brake caliper								
2.0 2.0 i	85 85	11/92→09/93 02/92→09/94	⬅		2	**11.8171-0008.1**	**990049**	ATE
2.0 i 2.4 i	88 - 92 92	05/89→09/94 10/88→10/94	⬅	→ 01/92	2	**11.8171-0008.1**	**990049**	ATE

	kW				! #			
FORD - SCORPIO I Saloon (GGE) 01/86→12/94								
Guide Bolt, brake caliper								
2.5 D	51	12/89→12/94	←	02/92→	2	**11.8171-0008.1**	**990049**	ATE
2.5 TD	68	06/88→07/93	←	02/92→	2	**11.8171-0008.1**	**990049**	ATE
2.9 i 24V	143	04/91→09/94	←	→ 01/92	2	**11.8171-0008.1**	**990049**	ATE
2.9 i	107	09/86→12/94	←	02/92→ 09/94	2	**11.8171-0008.1**	**990049**	ATE
			←	→ 01/92	2	**11.8171-0008.1**	**990049**	ATE
FORD - SCORPIO I Turnier (GGE) 05/88→09/94								
Guide Bolt, brake caliper								
2.0 i	85 - 88	09/91→09/94	←	02/92→	2	**11.8171-0008.1**	**990049**	ATE
2.5 TD	68	09/91→07/93	←	→ 01/92	2	**11.8171-0008.1**	**990049**	ATE
2.9 i	107	09/91→09/94						
2.4 i	92	09/91→09/94	←	→ 01/92	2	**11.8171-0008.1**	**990049**	ATE
2.9 24V	143	08/93→09/94	←		2	**11.8171-0008.1**	**990049**	ATE
FORD - SCORPIO II (GFR, GGR) 10/94→08/98								
Guide Bolt, brake caliper								
2.0 i	85	10/94→08/98	←		2	**11.8171-0008.1**	**990049**	ATE
2.0 i 16V	100	10/94→08/98						
2.3 i 16V	108	06/96→08/98						
2.5 TD	85	10/94→08/98						
2.9 i	110	02/95→08/98						
2.9 i 24V	152	10/94→08/98						
FORD - SCORPIO II Turnier (GNR, GGR) 10/94→08/98								
Guide Bolt, brake caliper								
2.0 i	85	10/94→08/98	←		2	**11.8171-0008.1**	**990049**	ATE
2.0 i 16V	100	10/94→08/98						
2.3 i 16V	108	06/96→08/98						
2.5 TD	85	10/94→08/98						
2.9 i	110	02/95→08/98						
2.9 i 24V	152	10/94→08/98						
FORD - SIERRA I Hatchback (GBC) 08/82→02/87								
Guide Bolt, brake caliper								
1.3	44	08/82→12/86	←	03/86→; + ABS	2	**11.8171-0008.1**	**990049**	ATE
1.6	55 - 58	08/82→12/86						
1.8	66	10/84→12/86	←	- ABS	2	**11.8171-0008.1**	**990049**	ATE
2.0	74 - 77	08/82→12/86	←	03/86→; + ABS	2	**11.8171-0008.1**	**990049**	ATE
2.0 i	85	03/85→12/86						
2.3	84	08/82→12/86						
2.3 D	49	08/82→12/86						
2.0	66	08/82→10/84	←	- ABS	2	**11.8171-0008.1**	**990049**	ATE
2.8 i XR 4x4	107	09/83→12/86		→ 03/85	2	**11.8171-0008.1**	**990049**	ATE
2.8 XR4i	105 - 110	08/82→12/86		04/83→ 03/85	2	**11.8171-0008.1**	**990049**	ATE
			←	03/86→; + ABS	2	**11.8171-0008.1**	**990049**	ATE
2.8 XR4i	107	08/82→12/86		04/83→ 03/85	2	**11.8171-0008.1**	**990049**	ATE
2.8 XR 4x4	110	02/85→12/86		→ 03/85	2	**11.8171-0008.1**	**990049**	ATE
			←	03/86→; + ABS	2	**11.8171-0008.1**	**990049**	ATE
FORD - SIERRA II (GBG, GB4) 01/87→02/93								
Guide Bolt, brake caliper								
1.6	53 - 55	01/87→02/93	←		2	**11.8171-0008.1**	**990049**	ATE
1.6 i	59	10/89→02/93						
1.8	59 - 66	01/87→02/93						
2.0	77 - 80	01/87→02/93						
2.0 16V Cosworth 4x4	162	01/90→02/93						
2.0 4x4	88 - 92	01/90→02/93						
2.3 D	49	01/87→09/89						
2.9 4x4	107 - 110	08/88→02/93						
2.9 i	107	08/88→02/93						
1.8 TD	55	08/88→02/93	←	01/90→	2	**11.8171-0008.1**	**990049**	ATE
2.0 i	74 - 92	01/87→02/93	←	- ABS	2	**11.8171-0008.1**	**990049**	ATE
2.0 i Cat	74	01/87→02/93						

© 2022 Continental Aftermarket & Services GmbH

	kW				! #			
FORD - SIERRA II (GBG, GB4) 01/87→02/93								
Guide Bolt, brake caliper								
2.0 i DOHC	85	12/91→02/93	←	- ABS	2	**11.8171-0008.1**	**990049**	ATE
2.8 i	105	08/87→02/93	←	→ 08/88	2	**11.8171-0008.1**	**990049**	ATE
2.9 i	110	08/88→02/93	←	02/92→	2	**11.8171-0008.1**	**990049**	ATE
FORD - SIERRA II Hatchback (GBC, GBG) 01/87→03/93								
Guide Bolt, brake caliper								
1.6	53 - 55	01/87→02/93	←		2	**11.8171-0008.1**	**990049**	ATE
1.6 i	59	10/89→02/93						
1.8	59 - 66	01/87→02/93						
2.0	77	01/87→02/93						
2.0 16V Cosworth 4x4	162	01/90→02/93						
2.0 16V Cosworth Cat 4x4	162	01/90→02/93						
2.3 D	49	01/87→09/89						
2.9 i	107	08/88→02/93						
1.8 TD	55	08/88→02/93	←	01/90→	2	**11.8171-0008.1**	**990049**	ATE
2.0 4x4	88	10/91→03/93	←	→ 02/93	2	**11.8171-0008.1**	**990049**	ATE
2.0 i	74 - 92	01/87→02/93	←	- ABS	2	**11.8171-0008.1**	**990049**	ATE
2.0 i Cat	74	01/87→02/93						
2.0 i DOHC	85	12/91→02/93						
2.8	110	03/87→09/89	←	→ 08/88	2	**11.8171-0008.1**	**990049**	ATE
2.8 i	105	01/87→02/93						
2.9 i XR 4x4	107 - 110	08/88→02/93	←	02/92→	2	**11.8171-0008.1**	**990049**	ATE
FORD - SIERRA II Turnier (BNG) 01/87→02/93								
Guide Bolt, brake caliper								
1.6	53 - 55	01/87→02/93	←		2	**11.8171-0008.1**	**990049**	ATE
1.6 i	59	10/89→02/93						
1.8	59 - 66	01/87→02/93						
1.8 TD	55	08/88→02/93						
2.0	77	01/87→02/93						
2.0 4x4	88	02/90→02/93						
2.3 D	49	01/87→02/93						
2.8 4x4	110	01/87→08/88						
2.8 i	105 - 107	01/87→02/93						
2.8 i 4x4	107	01/87→02/93						
2.9	107	08/88→02/93						
2.9 4x4	107 - 110	08/88→02/93						
2.9 i	110	08/88→02/93						
2.0 4x4	92	05/89→02/93	←	01/90→	2	**11.8171-0008.1**	**990049**	ATE
2.0 i	74 - 92	01/87→02/93	←	- ABS	2	**11.8171-0008.1**	**990049**	ATE
2.0 i Cat	74	01/87→02/93						
2.0 i DOHC	85	12/91→02/93						
FORD - SIERRA Turnier (BNC) 08/82→12/86								
Guide Bolt, brake caliper								
1.6	55	08/82→12/86	←	05/86→; - ABS	2	**11.8171-0008.1**	**990049**	ATE
			←	03/86→; + ABS	2	**11.8171-0008.1**	**990049**	ATE
1.8	66	10/84→12/86	←	- ABS	2	**11.8171-0008.1**	**990049**	ATE
2.0	74 - 85	08/82→12/86	←	03/86→; + ABS	2	**11.8171-0008.1**	**990049**	ATE
2.3	84	08/82→12/86						
2.3 D	49	08/82→12/86						
2.0	66	08/82→10/84	←	- ABS	2	**11.8171-0008.1**	**990049**	ATE
2.8 XR4i	105	08/82→12/86		04/83→ 03/85	2	**11.8171-0008.1**	**990049**	ATE
			←	03/86→; + ABS	2	**11.8171-0008.1**	**990049**	ATE
2.8 XR4i	107	08/82→12/86		04/83→ 03/85	2	**11.8171-0008.1**	**990049**	ATE
FORD - S-MAX (WA6) 05/06→12/14								
Guide Bolt, brake caliper								
1.6 EcoBoost	118	02/11→12/14			2	**11.8171-0008.1**	**990049**	ATE
1.6 TDCi	85	02/11→12/14						
1.8 TDCi	74 - 92	05/06→12/14						
2.0	107	05/06→12/14						

	kW				! #			
FORD - S-MAX (WA6) 05/06→12/14								
Guide Bolt, brake caliper								
2.0 Flexifuel 2.0 TDCi 2.2 TDCi 2.3	107 85 - 120 147 118	05/06→12/14 05/06→12/14 07/10→12/14 07/07→12/14			2	**11.8171-0008.1**	**990049**	ATE
2.2 TDCi	129	03/08→12/12		11/08→	2	**11.8171-0008.1**	**990049**	ATE
FORD - S-MAX VAN (WA6) 05/06→12/14								
Guide Bolt, brake caliper								
1.6 2.0 2.0 TDCi	118 107 85 - 120	02/11→12/14 03/10→12/14 01/07→12/14			2	**11.8171-0008.1**	**990049**	ATE
FORD - STREET KA (RL2) 03/03→07/05								
Guide Bolt, brake caliper								
1.6	70	05/03→07/05			2	**11.8171-0008.1**	**990049**	ATE
FORD - TOURNEO CONNECT 06/02→12/13								
Guide Bolt, brake caliper								
1.8 16V 1.8 TDCi 1.8 TDCi /TDDi /DI	85 66 - 81 55	06/02→12/13 06/02→12/13 06/02→12/13		→ 08/13	2	**11.8171-0008.1**	**990049**	ATE
FORD - TOURNEO CONNECT / GRAND TOURNEO CONNECT V408 MPV 09/13→								
Spring, brake caliper								
1.0 EcoBoost 1.5 TDCi 1.6 EcoBoost 1.6 TDCi	74 55 - 88 110 55 - 85	11/13→ 05/15→ 11/13→ 09/13→		not for increased payload	2	**11.8116-0356.1**	**390586**	ATE
Guide Bolt, brake caliper								
1.0 EcoBoost 1.5 TDCi 1.6 EcoBoost 1.6 TDCi	74 55 - 88 110 55 - 85	11/13→ 05/15→ 11/13→ 09/13→			2	**11.8171-0008.1**	**990049**	ATE
				not for increased payload	2	**11.8171-0008.1**	**990049**	ATE
Brake Pad Set, disc brake								
1.0 EcoBoost 1.5 TDCi 1.6 EcoBoost 1.6 TDCi	74 55 - 88 110 55 - 85	11/13→ 05/15→ 11/13→ 09/13→	←	for extended wheelbase; not for increased payload		**13.0460-7193.2** **13.0470-7193.2**	**607193** **LD7193**	ATE 23723 18,1 - WE / - WK ATE 23723 18,1 - WE / - WK Ceramic
			←	for shortened wheelbase		**13.0460-7193.2** **13.0470-7193.2**	**607193** **LD7193**	ATE 23723 18,1 - WE / - WK ATE 23723 18,1 - WE / - WK Ceramic
			←	for increased payload		**13.0470-7299.2**	**LD7299**	ATE 25736 18,4 - WE / - WK Ceramic
1.5 EcoBlue	55 - 88	05/18→	←	for shortened wheelbase; not for increased payload		**13.0460-7193.2** **13.0470-7193.2**	**607193** **LD7193**	ATE 23723 18,1 - WE / - WK ATE 23723 18,1 - WE / - WK Ceramic
			←	for increased payload		**13.0470-7299.2**	**LD7299**	ATE 25736 18,4 - WE / - WK Ceramic
FORD - TOURNEO COURIER B460 MPV 02/14→								
Brake Master Cylinder								
1.0 EcoBoost 1.5 EcoBlue 1.5 TDCi 1.6 TDCi	74 74 55 - 70 70	02/14→ 04/18→ 02/14→ 02/14→		for right-hand drive vehicles; - ABS		**24.4120-1711.3**	**011093**	Ø 20.6 without brake fluid reservoir
Brake Caliper								
1.0 EcoBoost 1.5 EcoBlue 1.5 TDCi 1.6 TDCi	74 74 55 - 70 70	02/14→ 04/18→ 02/14→ 02/14→	←	◪		**24.3541-1877.5**	**241413**	without holder
			←	◪		**24.3541-1878.5**	**241414**	without holder

© 2022 Continental Aftermarket & Services GmbH

	kW				! #			
FORD - TRANSIT CONNECT (P65_, P70_, P80_) 06/02→								
Guide Bolt, brake caliper								
1.8 16V 1.8 16V LPG 1.8 Di 1.8 TDCi	85 85 55 66 - 81	06/02→12/13 06/02→12/13 06/02→12/13 06/02→12/13			2	**11.8171-0008.1**	**990049**	ATE
FORD - TRANSIT CONNECT MPV 02/13→								
Spring, brake caliper								
1.5 TDCi 1.6 TDCi	55 - 88 55 - 85	05/15→ 02/13→		not for increased payload	2	**11.8116-0356.1**	**390586**	ATE
Guide Bolt, brake caliper								
1.5 TDCi 1.6 TDCi	55 - 88 55 - 85	05/15→ 02/13→			2	**11.8171-0008.1**	**990049**	ATE
				not for increased payload	2	**11.8171-0008.1**	**990049**	ATE
Brake Pad Set, disc brake								
1.5 EcoBlue	55 - 88	05/15→	←	for shortened wheelbase; not for increased payload		**13.0460-7193.2** **13.0470-7193.2**	**607193** **LD7193**	ATE 23723 18,1 - WE / - WK ATE 23723 18,1 - WE / - WK Ceramic
			←	for increased payload		**13.0470-7299.2**	**LD7299**	ATE 25736 18,4 - WE / - WK Ceramic
1.5 TDCi 1.6 TDCi	55 - 88 55 - 85	05/15→ 02/13→	←	for extended wheelbase; not for increased payload		**13.0460-7193.2** **13.0470-7193.2**	**607193** **LD7193**	ATE 23723 18,1 - WE / - WK ATE 23723 18,1 - WE / - WK Ceramic
			←	for shortened wheelbase		**13.0460-7193.2** **13.0470-7193.2**	**607193** **LD7193**	ATE 23723 18,1 - WE / - WK ATE 23723 18,1 - WE / - WK Ceramic
			←	for increased payload		**13.0470-7299.2**	**LD7299**	ATE 25736 18,4 - WE / - WK Ceramic
2.5 CNG 2.5 Duratec 2.5 LPG	126 126 126	09/13→ 09/13→ 09/13→	←	not for increased payload; for shortened wheelbase / for extended wheelbase		**13.0460-7193.2** **13.0470-7193.2**	**607193** **LD7193**	ATE 23723 18,1 - WE / - WK ATE 23723 18,1 - WE / - WK Ceramic
			←	for increased payload		**13.0470-7299.2**	**LD7299**	ATE 25736 18,4 - WE / - WK Ceramic
FORD - TRANSIT CONNECT V408 Box Body/MPV 02/13→								
Spring, brake caliper								
1.0 EcoBoost	74	02/13→		09/13→; not for increased payload	2	**11.8116-0356.1**	**390586**	ATE
1.5 TDCi 1.6 EcoBoost 1.6 TDCi	55 - 88 110 55 - 85	05/15→ 11/13→ 02/13→		not for increased payload	2	**11.8116-0356.1**	**390586**	ATE
Guide Bolt, brake caliper								
1.0 EcoBoost	74	02/13→		09/13→	2	**11.8171-0008.1**	**990049**	ATE
				09/13→; not for increased payload	2	**11.8171-0008.1**	**990049**	ATE
1.5 TDCi 1.6 EcoBoost 1.6 TDCi	55 - 88 110 55 - 85	05/15→ 11/13→ 02/13→			2	**11.8171-0008.1**	**990049**	ATE
				not for increased payload	2	**11.8171-0008.1**	**990049**	ATE
Brake Pad Set, disc brake								
1.0 EcoBoost	74	02/13→	←	09/13→; for shortened wheelbase		**13.0460-7193.2** **13.0470-7193.2**	**607193** **LD7193**	ATE 23723 18,1 - WE / - WK ATE 23723 18,1 - WE / - WK Ceramic
			←	09/13→; for extended wheelbase; not for increased payload		**13.0460-7193.2** **13.0470-7193.2**	**607193** **LD7193**	ATE 23723 18,1 - WE / - WK ATE 23723 18,1 - WE / - WK Ceramic
			←	for increased payload		**13.0470-7299.2**	**LD7299**	ATE 25736 18,4 - WE / - WK Ceramic
1.5 EcoBlue	55 - 88	05/18→	←	for shortened wheelbase; not for increased payload		**13.0460-7193.2** **13.0470-7193.2**	**607193** **LD7193**	ATE 23723 18,1 - WE / - WK ATE 23723 18,1 - WE / - WK Ceramic
			←	for increased payload		**13.0470-7299.2**	**LD7299**	ATE 25736 18,4 - WE / - WK Ceramic
1.5 TDCi	55 - 88	05/15→	←	for extended wheelbase; not for increased payload		**13.0460-7193.2**	**607193**	ATE 23723 18,1 - WE / - WK

	kW				! #			
FORD - TRANSIT CONNECT V408 Box Body/MPV 02/13→								
Brake Pad Set, disc brake								
1.6 EcoBoost 1.6 TDCi	110 55 - 70	11/13→ 02/13→		for extended wheelbase; not for increased payload		**13.0470-7193.2**	**LD7193**	ATE 23723 18,1 - WE / - WK Ceramic
				for shortened wheelbase		**13.0460-7193.2** **13.0470-7193.2**	**607193** **LD7193**	ATE 23723 18,1 - WE / - WK ATE 23723 18,1 - WE / - WK Ceramic
				for increased payload		**13.0470-7299.2**	**LD7299**	ATE 25736 18,4 - WE / - WK Ceramic
1.6 TDCi	85	02/13→		05/18→; for shortened wheelbase		**13.0460-7193.2** **13.0470-7193.2**	**607193** **LD7193**	ATE 23723 18,1 - WE / - WK ATE 23723 18,1 - WE / - WK Ceramic
				for extended wheelbase; not for increased payload		**13.0460-7193.2** **13.0470-7193.2**	**607193** **LD7193**	ATE 23723 18,1 - WE / - WK ATE 23723 18,1 - WE / - WK Ceramic
				for increased payload		**13.0470-7299.2**	**LD7299**	ATE 25736 18,4 - WE / - WK Ceramic
2.5 CNG 2.5 Duratec 2.5 LPG	126 126 126	09/13→ 09/13→ 09/13→		not for increased payload; for shortened wheelbase / for extended wheelbase		**13.0460-7193.2** **13.0470-7193.2**	**607193** **LD7193**	ATE 23723 18,1 - WE / - WK ATE 23723 18,1 - WE / - WK Ceramic
				for increased payload		**13.0470-7299.2**	**LD7299**	ATE 25736 18,4 - WE / - WK Ceramic
FORD - TRANSIT COURIER B460 Box Body/MPV 02/14→								
Brake Master Cylinder								
1.0 EcoBoost 1.5 EcoBlue 1.5 TDCi 1.6 TDCi	74 74 55 - 70 70	02/14→ 04/18→ 02/14→ 02/14→		for right-hand drive vehicles; - ABS		**24.4120-1711.3**	**011093**	Ø 20.6 without brake fluid reservoir
Brake Caliper								
1.0 EcoBoost 1.5 EcoBlue 1.5 TDCi 1.6 TDCi	74 74 55 - 70 70	02/14→ 04/18→ 02/14→ 02/14→				**24.3541-1877.5**	**241413**	without holder
						24.3541-1878.5	**241414**	without holder
FORD - TRANSIT COURIER B460 MPV 02/14→								
Brake Master Cylinder								
1.0 EcoBoost 1.5 EcoBlue 1.5 TDCi 1.6 TDCi	74 74 55 - 70 70	02/14→ 04/18→ 02/14→ 02/14→		for right-hand drive vehicles; - ABS		**24.4120-1711.3**	**011093**	Ø 20.6 without brake fluid reservoir
Brake Caliper								
1.0 EcoBoost 1.5 EcoBlue 1.5 TDCi 1.6 TDCi	74 74 55 - 70 70	02/14→ 04/18→ 02/14→ 02/14→				**24.3541-1877.5**	**241413**	without holder
						24.3541-1878.5	**241414**	without holder
FORD - TRANSIT V363 Bus (FAD, FBD) 08/13→								
Cable Pull, parking brake								
2.0 EcoBlue 2.2 TDCi 2.2 TDCi 4x4 2.2 TDCi All-wheel Drive 2.2 TDCi RWD	77 - 125 74 - 114 92 114 74 - 114	03/16→ 08/13→12/18 08/13→12/18 08/15→12/18 08/13→12/18		for vehicles with single rear axle; for extended wheelbase; ◪		**24.3727-0688.2**	**580688**	L= 1,490
FORD - TRANSIT V363 Platform/Chassis (FED, FFD) 08/13→								
Cable Pull, parking brake								
2.0 EcoBlue 2.0 EcoBlue 4x4 2.0 EcoBlue RWD 2.2 TDCi 2.2 TDCi 4x4	77 - 125 96 - 125 77 - 125 74 - 92 92 - 114	03/16→ 01/17→ 03/16→ 08/13→12/18 08/13→12/18		for vehicles with single rear axle; for extended wheelbase; ◪		**24.3727-0688.2**	**580688**	L= 1,490

© 2022 Continental Aftermarket & Services GmbH

	kW				! #			
FORD - TRANSIT V363 Platform/Chassis (FED, FFD) 08/13→								
Cable Pull, parking brake								
2.2 TDCi RWD	74 - 99	08/13→12/18		for vehicles with single rear axle; for extended wheelbase; ◪		**24.3727-0688.2**	**580688**	L= 1,490
2.2 TDCi 2.2 TDCi RWD	114 92 - 114	08/13→12/18 08/13→12/18		05/14→; for vehicles with single rear axle; for extended wheelbase; ◪		**24.3727-0688.2**	**580688**	L= 1,490
FORD - TRANSIT V363 Van (FCD, FDD) 08/13→								
Cable Pull, parking brake								
2.0 EcoBlue 2.0 EcoBlue 4x4 2.0 EcoBlue RWD 2.2 TDCi 2.2 TDCi 4x4 2.2 TDCi RWD	77 - 125 96 - 125 77 - 125 74 - 114 92 - 114 74 - 114	03/16→ 01/17→ 03/16→ 08/13→12/18 08/13→12/18 08/13→12/18		for vehicles with single rear axle; for extended wheelbase; ◪		**24.3727-0688.2**	**580688**	L= 1,490
HONDA - ACCORD IV (CB) 11/89→12/93								
Brake Pad Set, disc brake								
1.8	77	01/90→12/91	⬅			**13.0460-5818.2**	**605818**	AKE 21497 18,0 + WK
2.0 16V	66 - 81	01/90→03/93	⬅			**13.0460-5818.2**	**605818**	AKE 21497 18,0 + WK
2.0 i 16V	98	01/90→03/93	➡	+ ABS		**13.0460-5929.2**	**605929**	AKE 21719 15,0 + WK
2.2 2.2 i 16V 2.2 i 16V Automatik	103 110 108	10/91→10/93 01/90→03/93 01/90→03/93	➡			**13.0460-5929.2**	**605929**	AKE 21719 15,0 + WK
HONDA - ACCORD IV Aerodeck (CB) 09/89→02/94								
Brake Pad Set, disc brake								
2.0 i 16V 2.2 2.2 i 16V	98 103 108 - 110	03/93→12/93 05/92→12/93 01/91→12/93	➡			**13.0460-5929.2**	**605929**	AKE 21719 15,0 + WK
HONDA - ACCORD IV Coupe (CB, CC) 05/89→12/93								
Brake Pad Set, disc brake								
2.0 i 16V	98	01/92→09/93	⬅			**13.0460-5818.2**	**605818**	AKE 21497 18,0 + WK
			➡			**13.0460-5929.2**	**605929**	AKE 21719 15,0 + WK
HONDA - ACCORD V (CC, CD) 06/92→12/97								
Brake Pad Set, disc brake								
2.0 i	85	03/93→01/96	➡	→ 12/95		**13.0460-5929.2**	**605929**	AKE 21719 15,0 + WK
			➡	01/94→		**13.0460-5929.2**	**605929**	AKE 21719 15,0 + WK
2.0 i S	96	03/93→01/96	⬅			**13.0460-5818.2**	**605818**	AKE 21497 18,0 + WK
			➡	→ 12/95		**13.0460-5929.2**	**605929**	AKE 21719 15,0 + WK
2.3 i SR	116	03/93→01/96	➡	→ 12/95		**13.0460-5929.2**	**605929**	AKE 21719 15,0 + WK
HONDA - ACCORD V (CE, CF_, CD) 09/95→10/98								
Brake Pad Set, disc brake								
1.9 i 2.0 TDi 2.2 i VTEC	85 77 110	02/96→10/98 04/96→10/98 02/96→10/98	➡	→ 09/98		**13.0460-5929.2**	**605929**	AKE 21719 15,0 + WK
2.0 i LS	96	02/96→10/98	⬅			**13.0460-5818.2**	**605818**	AKE 21497 18,0 + WK
			➡	→ 09/98		**13.0460-5929.2**	**605929**	AKE 21719 15,0 + WK
HONDA - ACCORD V Aerodeck (CE) 04/93→02/98								
Brake Pad Set, disc brake								
2.0 i LS 16V 2.2 i ES	100 110	09/93→02/98 09/93→02/98	➡	01/94→ 01/98		**13.0460-5929.2**	**605929**	AKE 21719 15,0 + WK
HONDA - ACCORD V Coupe (CD) 04/93→12/98								
Brake Pad Set, disc brake								
2.0	100	09/93→12/97	➡	01/94→		**13.0460-5929.2**	**605929**	AKE 21719 15,0 + WK

	kW				! #			
HONDA - ACCORD V Coupe (CD) 04/93→12/98								
Brake Pad Set, disc brake								
2.2 i ES	110	09/93→02/98	➡	01/94→ 01/98		**13.0460-5929.2**	**605929**	AKE 21719 15,0 + WK
HONDA - ACCORD VI (CK, CG, CH, CF) 03/97→12/03								
Brake Pad Set, disc brake								
2.2 Type-R	156	02/99→12/02	⬅			**13.0460-5818.2**	**605818**	AKE 21497 18,0 + WK
2.3	110	03/97→01/99	⬅			**13.0460-5818.2**	**605818**	AKE 21497 18,0 + WK
			➡			**13.0460-5929.2**	**605929**	AKE 21719 15,0 + WK
Brake Disc								
2.3	110	03/97→01/99	➡			**24.0109-0145.1**	**409145**	Ø 260 Brake Disc Thickness [mm] 9 Minimum thickness [mm] 8
Brake Shoe Set								
2.3	110	03/97→01/99	➡			**03.0137-0339.2**	**650339**	Ø 203 Width [mm] 38
HONDA - ACCORD VI Coupe (CG) 12/97→06/03								
Brake Pad Set, disc brake								
2.0 2.0 i 16V 3.0 V6 24V	107 108 147	11/99→10/02 02/98→06/03 02/98→06/03	➡			**13.0460-5929.2**	**605929**	AKE 21719 15,0 + WK
Brake Disc								
2.0 2.0 i 16V	107 108	11/99→10/02 02/98→06/03	➡			**24.0109-0145.1**	**409145**	Ø 260 Brake Disc Thickness [mm] 9 Minimum thickness [mm] 8
HONDA - ACCORD VII (CL, CN) 01/03→09/12								
Spring, brake caliper								
2.0 2.0 All-wheel Drive 2.4 2.4 i 16V 3.0	110 - 114 114 113 - 140 115 182	02/03→05/08 02/03→05/08 02/03→05/08 02/03→05/08 04/06→05/08			2	**11.8116-0356.1**	**390586**	ATE
Guide Bolt, brake caliper								
2.0 2.0 All-wheel Drive 2.4 2.4 i 16V 3.0	110 - 114 114 113 - 140 115 182	02/03→05/08 02/03→05/08 02/03→05/08 02/03→05/08 04/06→05/08			2	**11.8171-0008.1**	**990049**	ATE
Brake Pad Set, disc brake								
2.0 2.4 2.4 i 16V	110 113 - 140 115	01/06→03/08 02/03→05/08 02/03→05/08	➡			**13.0460-5711.2**	**605711**	23652 15,7 + WK
HONDA - ACCORD VII (CM) 09/02→05/08								
Spring, brake caliper								
2.4 Vtec E	118	09/02→12/05		02/03→ 09/05	2	**11.8116-0356.1**	**390586**	ATE
2.4 Vtec E 3.0	125 177 - 182	06/06→01/08 05/03→12/07			2	**11.8116-0356.1**	**390586**	ATE
Guide Bolt, brake caliper								
2.4 Vtec E	118	09/02→12/05		02/03→ 09/05	2	**11.8171-0008.1**	**990049**	ATE
2.4 Vtec E 3.0	125 177 - 182	06/06→01/08 05/03→12/07			2	**11.8171-0008.1**	**990049**	ATE
HONDA - ACCORD VII Tourer (CM, CN) 04/03→05/08								
Spring, brake caliper								
2.0 2.2 i-CTDi 2.4 2.4 Vtec T	114 103 140 147	04/03→05/08 01/04→05/08 04/03→05/08 09/03→05/08			2	**11.8116-0356.1**	**390586**	ATE

© 2022 Continental Aftermarket & Services GmbH

	kW				! #			
HONDA - ACCORD VII Tourer (CM, CN) 04/03→05/08								
Guide Bolt, brake caliper								
2.0 2.2 i-CTDi 2.4 2.4 Vtec T	114 103 140 147	04/03→05/08 01/04→05/08 04/03→05/08 09/03→05/08			2	**11.8171-0008.1**	**990049**	ATE
Brake Pad Set, disc brake								
2.0 2.2 i-CTDi	114 103	04/03→05/08 01/04→05/08	→			**13.0460-5711.2**	**605711**	23652 15,7 + WK
HONDA - ACCORD Hatchback (TF) 01/09→								
Brake Pad Set, disc brake								
3.5 i All-wheel Drive	199	09/09→12/12	←			**13.0460-5878.2**	**605878**	23729 16,9 + WK
HONDA - AVANCIER (TA) 09/99→09/03								
Brake Pad Set, disc brake								
2.3 4x4 3.0 4x4	110 158	09/99→09/03 09/99→09/03	← →			**13.0460-5878.2** **13.0460-5711.2**	**605878** **605711**	23729 16,9 + WK 23652 15,7 + WK
Brake Shoe Set, parking brake								
2.3 4x4 3.0 4x4	110 158	09/99→09/03 09/99→09/03	→			**03.0137-0442.2**	**650442**	Width [mm] 35
HONDA - CIVIC VI Aerodeck (MB, MC) 04/98→02/01								
Brake Pad Set, disc brake								
1.4 16V	55 - 66	04/98→02/01	→	01/99→; + ABS		**13.0460-5929.2**	**605929**	AKE 21719 15,0 + WK
1.5 16V	84	04/98→02/01	→	+ ABS		**13.0460-5929.2**	**605929**	AKE 21719 15,0 + WK
1.6 16V 1.8 16V	85 - 92 124	04/98→02/01 04/98→02/01	→			**13.0460-5929.2**	**605929**	AKE 21719 15,0 + WK
Brake Shoe Set								
1.4 16V 1.5 16V	55 - 66 84	04/98→02/01 04/98→02/01	→	- ABS		**03.0137-0339.2**	**650339**	Ø 203 Width [mm] 38
HONDA - CIVIC VI Fastback (MA, MB) 09/94→02/01								
Brake Pad Set, disc brake								
1.4 i 1.5 16V	55 84	09/95→02/01 01/97→02/01	→	01/99→; + ABS		**13.0460-5929.2**	**605929**	AKE 21719 15,0 + WK
1.6 1.8 16V	92 124	11/98→02/01 01/97→02/01	→			**13.0460-5929.2**	**605929**	AKE 21719 15,0 + WK
1.6 16V 1.6 VTi 2.0 i TD 2.0 TDiC	85 118 63 74 - 77	01/97→02/01 01/97→02/01 01/97→02/01 11/98→10/00	→	01/99→		**13.0460-5929.2**	**605929**	AKE 21719 15,0 + WK
Brake Shoe Set								
1.4 i 1.5 16V	55 84	09/95→02/01 01/97→02/01	→	11/98→; - ABS		**03.0137-0339.2**	**650339**	Ø 203 Width [mm] 38
1.4 i	66	06/95→02/01	→	- ABS		**03.0137-0339.2**	**650339**	Ø 203 Width [mm] 38
1.5 i Vtec-E	66	09/94→01/97	→	01/96→ 12/96; - ABS		**03.0137-0339.2**	**650339**	Ø 203 Width [mm] 38
			→	→ 12/95; - ABS		**03.0137-0339.2**	**650339**	Ø 203 Width [mm] 38
HONDA - CIVIC VI Hatchback (EJ, EK) 10/95→03/01								
Brake Pad Set, disc brake								
1.5	66	11/95→12/96	→	Number of Doors: 4		**13.0460-5929.2**	**605929**	AKE 21719 15,0 + WK
1.5 i	84	11/95→02/01	→	→ 01/01; Number of Doors: 4		**13.0460-5929.2**	**605929**	AKE 21719 15,0 + WK
1.6	92	11/98→03/01	→			**13.0460-5929.2**	**605929**	AKE 21719 15,0 + WK
2.0 TDiC	77	11/98→10/00	→	01/99→		**13.0460-5929.2**	**605929**	AKE 21719 15,0 + WK
HONDA - CIVIC VI Saloon (EJ, EK) 06/95→03/01								
Brake Pad Set, disc brake								
1.5 i	84	11/95→02/01	→	→ 01/01; Number of Doors: 4		**13.0460-5929.2**	**605929**	AKE 21719 15,0 + WK

	kW				! #			
HONDA - CIVIC VII Coupe (EM2) 02/01→12/05								
Brake Pad Set, disc brake								
1.6 i	81	02/01→12/05	➡			**13.0460-5929.2**	**605929**	AKE 21719 15,0 + WK
			➡	→ 10/04		**13.0460-5929.2**	**605929**	AKE 21719 15,0 + WK
1.7 i 1.7 i VTEC	88 92	05/01→12/05 05/01→12/05	➡	→ 10/04		**13.0460-5929.2**	**605929**	AKE 21719 15,0 + WK
HONDA - CIVIC VII Hatchback (EU, EP, EV) 01/00→02/06								
Brake Pad Set, disc brake								
1.4 i 1.6 i 2.0 Type-R	55 81 147	02/01→09/05 02/01→09/05 09/01→09/05	➡			**13.0460-5929.2**	**605929**	AKE 21719 15,0 + WK
1.4 iS	66	02/01→09/05	➡	for left-hand drive vehicles		**13.0460-5929.2**	**605929**	AKE 21719 15,0 + WK
1.7 CTDi	74	01/02→09/05	⬅	for vehicles with sports suspension		**13.0460-5878.2**	**605878**	23729 16,9 + WK
			➡			**13.0460-5929.2**	**605929**	AKE 21719 15,0 + WK
2.0 i Sport	118	09/01→09/05	⬅	01/04→		**13.0460-5878.2**	**605878**	23729 16,9 + WK
			➡	01/04→		**13.0460-5929.2**	**605929**	AKE 21719 15,0 + WK
HONDA - CIVIC VII Saloon (ES, ET) 10/00→04/06								
Brake Pad Set, disc brake								
1.3 IMA	61	10/03→09/05	➡	01/04→		**13.0460-5929.2**	**605929**	AKE 21719 15,0 + WK
1.4	66	12/00→09/05	⬅	02/01→; for vehicles with sports suspension		**13.0460-5878.2**	**605878**	23729 16,9 + WK
			➡	02/01→		**13.0460-5929.2**	**605929**	AKE 21719 15,0 + WK
1.6 1.7	81 85	02/01→09/05 02/01→09/05	⬅	for vehicles with sports suspension		**13.0460-5878.2**	**605878**	23729 16,9 + WK
			➡			**13.0460-5929.2**	**605929**	AKE 21719 15,0 + WK
2.0	118	10/03→09/05	⬅	01/04→		**13.0460-5878.2**	**605878**	23729 16,9 + WK
			➡	01/04→		**13.0460-5929.2**	**605929**	AKE 21719 15,0 + WK
HONDA - CIVIC VIII Hatchback (FN, FK) 09/05→								
Brake Caliper								
1.4 1.8 2.0 i-VTEC Type R 2.2 CTDi Type R	61 103 177 103 148	09/05→ 09/05→ 03/10→12/10 09/05→ 09/06→	➡	◪		**24.3344-1741.5**	**241409**	without holder + FSB
			➡	◪		**24.3344-1742.5**	**241410**	without holder + FSB
HONDA - CIVIC VIII Saloon (FD, FA) 09/05→								
Brake Caliper								
2.0 i-VTEC Type R	165	08/07→09/10	➡	◪		**24.3344-1741.5**	**241409**	without holder + FSB
			➡	◪		**24.3344-1742.5**	**241410**	without holder + FSB
Brake Pad Set, disc brake								
1.3 1.3 IMA	85 70	02/06→ 01/06→	➡	→ 02/12		**13.0460-5929.2**	**605929**	AKE 21719 15,0 + WK
1.3 IMA 1.6	82 - 85 92	09/05→02/12 01/12→	➡			**13.0460-5929.2**	**605929**	AKE 21719 15,0 + WK
1.6	84 - 92	09/05→	⬅	→ 12/12		**13.0460-5878.2**	**605878**	23729 16,9 + WK
1.8 EXS Flex	103	11/06→	➡	→ 12/12		**13.0460-5929.2**	**605929**	AKE 21719 15,0 + WK
1.8	97 - 103	09/05→12/13	⬅			**13.0460-5878.2**	**605878**	23729 16,9 + WK
			➡			**13.0460-5929.2**	**605929**	AKE 21719 15,0 + WK
HONDA - CIVIC IX Saloon (FB) 09/11→								
Brake Pad Set, disc brake								
1.8	103 - 104	09/11→	➡			**13.0460-5929.2**	**605929**	AKE 21719 15,0 + WK
HONDA - CONCERTO (HW, MA) 08/89→10/96								
Brake Shoe Set								
1.4	61 - 66	08/89→10/92	➡			**03.0137-0339.2**	**650339**	Ø 203 Width [mm] 38
1.5 i 16V	66	08/89→03/95	➡	01/90→ 01/95		**03.0137-0339.2**	**650339**	Ø 203 Width [mm] 38

© 2022 Continental Aftermarket & Services GmbH

	kW				! #			
HONDA - CONCERTO Saloon (HWW) 08/89→05/95								
Brake Shoe Set								
1.4	61 - 66	08/89→10/92	➡			**03.0137-0339.2**	**650339**	Ø 203 Width [mm] 38
1.5 i 16V	66	08/89→05/95	➡	01/90→ 01/95		**03.0137-0339.2**	**650339**	Ø 203 Width [mm] 38
HONDA - CR-V I (RD) 10/95→07/02								
Brake Pad Set, disc brake								
2.0	98	04/99→02/02	⬅	4-Speed Automatic Transmission		**13.0460-5818.2**	**605818**	AKE 21497 18,0 + WK
HONDA - CR-V II (RD_) 09/01→07/07								
Brake Pad Set, disc brake								
2.0	110 - 112	09/01→03/07	➡	07/02→ 12/04		**13.0460-5711.2**	**605711**	23652 15,7 + WK
2.2 CTDi	103	02/05→09/06	➡			**13.0460-5711.2**	**605711**	23652 15,7 + WK
2.4 Vtec 4WD	118	09/01→09/06	➡	03/02→ 12/04		**13.0460-5711.2**	**605711**	23652 15,7 + WK
Brake Shoe Set, parking brake								
2.0	112	03/02→09/06	➡	07/02→ 12/04		**03.0137-0442.2**	**650442**	Width [mm] 35
			➡	01/05→		**03.0137-3051.2**	**653051**	Width [mm] 35 - HEB
2.0	110	09/01→03/07	➡	07/02→ 12/04		**03.0137-0442.2**	**650442**	Width [mm] 35
			➡	01/05→ 09/06		**03.0137-3051.2**	**653051**	Width [mm] 35 - HEB
2.2 CTDi	103	02/05→09/06	➡			**03.0137-3051.2**	**653051**	Width [mm] 35 - HEB
2.4 Vtec 4WD	118	09/01→09/06	➡	03/02→ 12/04		**03.0137-0442.2**	**650442**	Width [mm] 35
			➡	01/05→		**03.0137-3051.2**	**653051**	Width [mm] 35 - HEB
HONDA - CR-V III (RE_) 06/06→								
Brake Shoe Set, parking brake								
2.0 i-VTEC 2.0 i-VTEC 4WD 2.4	105 - 110 110 124	01/07→06/12 10/06→06/12 06/06→	➡			**03.0137-3051.2**	**653051**	Width [mm] 35 - HEB
2.2 i-CTDi 4WD 2.2 i-DTEC 4WD 2.4 2.4 i-Vtec 4WD 2.4 i-VTEC 4WD	103 110 125 125 122	01/07→ 01/07→ 04/07→ 04/07→ 09/09→	➡	→ 09/12		**03.0137-3051.2**	**653051**	Width [mm] 35 - HEB
2.4 4WD	124	09/06→	➡	09/07→ 09/12		**03.0137-3051.2**	**653051**	Width [mm] 35 - HEB
2.4 i-VTEC 4WD	118	10/06→	➡	01/07→ 09/12		**03.0137-3051.2**	**653051**	Width [mm] 35 - HEB
HONDA - CR-V IV (RM_) 01/12→								
Brake Shoe Set, parking brake								
1.6 i-DTEC 1.6 i-DTEC 4WD 2.0 2.0 AWD 2.0 Flex 2.0 iVtec 2.2 i-DTEC AWD 2.4	88 118 110 114 114 114 110 138	10/13→ 02/15→ 01/12→ 10/12→ 01/13→ 10/12→ 10/12→ 01/12→	➡			**03.0137-3051.2**	**653051**	Width [mm] 35 - HEB
HONDA - CR-V V (RW_, RT_) 12/16→								
Brake Pad Set, disc brake								
1.5 1.5 AWD 1.5 VTEC 1.5 VTEC AWD 1.6 i-DTEC AWD 2.0 e-CVT Hybrid 2.0 e-CVT Hybrid AWD 2.0 i-VTEC 2.0 i-VTEC AWD 2.4 AWD 2.4 i-VTEC AWD	138 - 142 138 - 142 127 127 88 107 107 113 110 135 137	12/16→ 12/16→ 08/17→ 08/17→ 01/19→ 12/18→ 12/18→ 01/17→ 09/17→ 12/16→ 09/17→	➡			**13.0460-5530.2**	**605530**	+ WK + Zub
HONDA - ELEMENT (YH) 07/02→12/11								
Brake Shoe Set, parking brake								
2.4 2.4 4WD	119 124	07/02→12/05 09/06→12/11	➡			**03.0137-0442.2**	**650442**	Width [mm] 35

	kW				! #			
HONDA - ELEMENT (YH) 07/02→12/11								
Brake Shoe Set, parking brake								
2.4 4x4 2.4 Vtec 4x4	119 118	07/02→12/05 07/02→12/11	→			**03.0137-0442.2**	**650442**	Width [mm] 35
HONDA - ELYSION (RR) 05/04→								
Brake Pad Set, disc brake								
2.4 i-VTEC	118	05/04→	←			**13.0460-5842.2**	**605842**	23420 16,5 - WE / - WK
Brake Disc								
2.4 i-VTEC	118	05/04→	→			**24.0109-0132.1**	**409132**	Ø 282 Brake Disc Thickness [mm] 9 Minimum thickness [mm] 7.5
Brake Shoe Set, parking brake								
2.4 i-VTEC	118	05/04→	→			**03.0137-3051.2**	**653051**	Width [mm] 35 - HEB
HONDA - FR-V (BE) 08/04→								
Brake Pad Set, disc brake								
1.7 1.8 2.0 2.2 i CTDi	92 103 110 - 114 103	08/04→ 01/07→ 08/04→ 07/05→	← →			**13.0460-5878.2** **13.0460-5711.2**	**605878** **605711**	23729 16,9 + WK 23652 15,7 + WK
Brake Shoe Set, parking brake								
1.7 1.8 2.0 2.2 i CTDi	92 103 110 - 114 103	08/04→ 01/07→ 08/04→ 07/05→	→			**03.0137-0442.2**	**650442**	Width [mm] 35
HONDA - INSIGHT (ZE_) 04/09→								
Brake Pad Set, disc brake								
1.3 IMA	65 - 73	04/09→	→	→ 09/13		**13.0460-5929.2**	**605929**	AKE 21719 15,0 + WK
HONDA - INTEGRA Coupe (DC2, DC4) 07/93→11/01								
Brake Pad Set, disc brake								
1.8	107	07/93→11/01	→	11/97→ 10/01		**13.0460-5929.2**	**605929**	AKE 21719 15,0 + WK
1.8 Type-R	140	11/97→10/01	→			**13.0460-5929.2**	**605929**	AKE 21719 15,0 + WK
1.8 Type-R	147	09/93→08/01	→	11/97→		**13.0460-5929.2**	**605929**	AKE 21719 15,0 + WK
HONDA - INTEGRA Coupe (DC5) 08/01→								
Brake Pad Set, disc brake								
2.0 2.0 16V Type-R 2.0 Type-S	118 - 147 162 154	02/02→ 02/02→ 10/04→04/07	→			**13.0460-5929.2**	**605929**	AKE 21719 15,0 + WK
HONDA - JAZZ III (GE_, GG_, GP_, ZA_) 10/07→								
Brake Pad Set, disc brake								
1.3 HYBRID	65	04/11→	→	→ 12/15		**13.0460-5929.2**	**605929**	AKE 21719 15,0 + WK
HONDA - LEGEND II (KA) 01/91→03/96								
Brake Pad Set, disc brake								
3.2 i 24V	151	01/91→02/96	→	→ 01/96		**13.0460-5711.2**	**605711**	23652 15,7 + WK
Brake Disc								
3.2 i 24V	151	01/91→02/96	→	→ 01/96		**24.0109-0132.1**	**409132**	Ø 282 Brake Disc Thickness [mm] 9 Minimum thickness [mm] 7.5
HONDA - LEGEND II Coupe (KA) 01/91→03/96								
Brake Pad Set, disc brake								
3.2 i 24V	151	01/91→02/96	→	→ 01/96		**13.0460-5711.2**	**605711**	23652 15,7 + WK

© 2022 Continental Aftermarket & Services GmbH

	kW				! #			
HONDA - LEGEND II Coupe (KA) 01/91→03/96								
Brake Disc								
3.2 i 24V	151	01/91→02/96	➡	→ 01/96		**24.0109-0132.1**	**409132**	Ø 282 Brake Disc Thickness [mm] 9 Minimum thickness [mm] 7.5
HONDA - LEGEND III (KA) 02/96→								
Brake Pad Set, disc brake								
3.5 i 24V	151	02/96→10/97	➡			**13.0460-5711.2**	**605711**	23652 15,7 + WK
3.5 i 24V	153	11/97→09/04	➡	01/99→		**13.0460-5711.2**	**605711**	23652 15,7 + WK
Brake Disc								
3.5 i 24V	151	02/96→10/97	➡			**24.0109-0132.1**	**409132**	Ø 282 Brake Disc Thickness [mm] 9 Minimum thickness [mm] 7.5
3.5 i 24V	153	11/97→09/04	➡	→ 12/98		**24.0109-0132.1**	**409132**	Ø 282 Brake Disc Thickness [mm] 9 Minimum thickness [mm] 7.5
HONDA - ODYSSEY (RL1, RA6, RA_) 09/98→								
Brake Disc								
3.5	171	07/02→08/04	➡			**24.0109-0132.1**	**409132**	Ø 282 Brake Disc Thickness [mm] 9 Minimum thickness [mm] 7.5
Brake Shoe Set, parking brake								
3.5	171	07/02→08/04	➡			**03.0137-0442.2**	**650442**	Width [mm] 35
HONDA - ODYSSEY MPV (RA_) 10/95→10/00								
Brake Pad Set, disc brake								
2.3 2.3 4x4	110 110	10/97→12/99 10/97→12/99	➡			**13.0460-5711.2**	**605711**	23652 15,7 + WK
Brake Disc								
2.3 2.3 4x4	110 110	10/97→12/99 10/97→12/99	➡	01/98→		**24.0109-0132.1**	**409132**	Ø 282 Brake Disc Thickness [mm] 9 Minimum thickness [mm] 7.5
Brake Shoe Set, parking brake								
2.3 2.3 4x4	110 110	10/97→12/99 10/97→12/99	➡	01/98→		**03.0137-0442.2**	**650442**	Width [mm] 35
HONDA - PRELUDE IV (BB_) 12/91→02/97								
Brake Pad Set, disc brake								
2.0 i 16V 2.2 i 16V Vtec 2.3 i 16V	98 136 118	02/92→09/96 02/93→09/96 02/92→09/96	➡			**13.0460-5929.2**	**605929**	AKE 21719 15,0 + WK
HONDA - PRELUDE V (BB_) 10/96→04/01								
Brake Pad Set, disc brake								
2.0 16V 2.2 16V	98 136 - 147	10/96→10/00 10/96→10/00	➡			**13.0460-5929.2**	**605929**	AKE 21719 15,0 + WK
HONDA - S2000 (AP) 03/99→								
Brake Pad Set, disc brake								
2.0 2.0 Vtec 2.2 Vtec	177 184 176	06/99→ 10/03→ 10/03→	➡	→ 09/04		**13.0460-5929.2**	**605929**	AKE 21719 15,0 + WK
2.0 Vtec	170	03/99→10/03	➡			**13.0460-5929.2**	**605929**	AKE 21719 15,0 + WK
HONDA - SHUTTLE (RA) 06/94→06/04								
Brake Pad Set, disc brake								
2.2 16V	110	10/94→02/98	➡	01/95→ 12/97		**13.0460-5711.2**	**605711**	23652 15,7 + WK
2.3 16V 3.0	110 154	10/97→06/04 10/97→06/04	➡	01/98→ 05/01		**13.0460-5711.2**	**605711**	23652 15,7 + WK
2.3 16V 4x4 3.0 4x4	110 154	10/97→06/02 10/97→06/02	➡			**13.0460-5711.2**	**605711**	23652 15,7 + WK

	kW				! #			
HONDA - SHUTTLE (RA) 06/94→06/04								
Brake Disc								
2.2 16V	110	10/94→02/98	➡	01/95→ 12/97		**24.0109-0132.1**	**409132**	Ø 282 Brake Disc Thickness [mm] 9 Minimum thickness [mm] 7.5
2.3 16V 2.3 16V 4x4 3.0 3.0 4x4	110 110 154 154	10/97→06/04 10/97→06/02 10/97→06/04 10/97→06/02	➡	01/98→ 05/01		**24.0109-0132.1**	**409132**	Ø 282 Brake Disc Thickness [mm] 9 Minimum thickness [mm] 7.5
3.5 ESi	171	07/02→06/04	➡			**24.0109-0132.1**	**409132**	Ø 282 Brake Disc Thickness [mm] 9 Minimum thickness [mm] 7.5
Brake Shoe Set, parking brake								
2.2 16V	110	10/94→02/98	➡	01/95→ 12/97		**03.0137-0442.2**	**650442**	Width [mm] 35
2.3 16V 2.3 16V 4x4 3.0 3.0 4x4	110 110 154 154	10/97→06/04 10/97→06/02 10/97→06/04 10/97→06/02	➡	01/98→ 05/01		**03.0137-0442.2**	**650442**	Width [mm] 35
3.5 ESi	171	07/02→06/04	➡			**03.0137-0442.2**	**650442**	Width [mm] 35
HONDA - STEPWGN (DBA-RG_) 10/05→09/09								
Brake Pad Set, disc brake								
2.0 2.0 4WD 2.4 Z FF	114 114 119	10/05→09/09 10/05→09/09 10/05→09/09	⬅			**13.0460-5878.2**	**605878**	23729 16,9 + WK
Brake Shoe Set, parking brake								
2.0 2.0 4WD 2.4 Z FF	114 114 119	10/05→09/09 10/05→09/09 10/05→09/09	➡			**03.0137-0442.2**	**650442**	Width [mm] 35
HONDA - STEPWGN (DBA-RK_) 10/09→12/15								
Brake Shoe Set, parking brake								
2.0 i-VTEC	110	10/09→03/15	➡			**03.0137-0442.2**	**650442**	Width [mm] 35
HONDA - STEPWGN (LA-RF_, UA-RF_) 10/00→09/05								
Brake Pad Set, disc brake								
2.0 2.0 4WD 2.4	118 118 119	10/00→09/05 10/00→09/05 10/00→09/05	➡			**13.0460-5711.2**	**605711**	23652 15,7 + WK
Brake Shoe Set, parking brake								
2.0 2.0 4WD 2.4	118 118 119	10/00→09/05 10/00→09/05 10/00→09/05	➡			**03.0137-0442.2**	**650442**	Width [mm] 35
HONDA - STREAM (RN) 05/01→								
Brake Pad Set, disc brake								
1.7 16V	92	05/01→09/06	⬅	→ 09/05; Rim Size [in]: 15; Brake Size: 15"		**13.0460-5878.2**	**605878**	23729 16,9 + WK
			➡			**13.0460-5711.2**	**605711**	23652 15,7 + WK
2.0 16V	115	05/01→09/06	⬅	→ 09/05; Brake Size: 15"		**13.0460-5878.2**	**605878**	23729 16,9 + WK
			➡			**13.0460-5711.2**	**605711**	23652 15,7 + WK
Brake Shoe Set, parking brake								
1.7 16V 2.0 16V	92 115	05/01→09/06 05/01→09/06	➡	→ 09/05		**03.0137-0442.2**	**650442**	Width [mm] 35
HYUNDAI - ACCENT IV (RB) 11/10→								
Brake Caliper								
1.4	73 - 74	04/15→	➡			**24.3344-1739.5**	**241371**	without holder + FSB
			➡			**24.3344-1740.5**	**241372**	without holder + FSB
Brake Pad Set, disc brake								
1.4 1.6 1.6 CRDi 1.6 CVVT 1.6 GDI	73 - 79 91 94 90 103	11/10→ 11/10→ 07/11→ 12/10→ 09/11→	➡			**13.0460-5650.2**	**605650**	AKE 25337 15,5 + WK + Zub

© 2022 Continental Aftermarket & Services GmbH

	kW				! #			
HYUNDAI - ACCENT IV (RB) 11/10→								
Brake Disc								
1.4	73 - 79	11/10→	➡			**24.0110-0398.1**	**410398**	Ø 262 Brake Disc Thickness [mm] 10 Minimum thickness [mm] 8.4
1.6	91	11/10→						
1.6 CRDi	94	07/11→						
1.6 CVVT	90	12/10→						
1.6 GDI	103	09/11→						
HYUNDAI - ACCENT IV Saloon (RB) 08/10→								
Brake Pad Set, disc brake								
1.4	74 - 80	11/10→	➡			**13.0460-5650.2**	**605650**	AKE 25337 15,5 + WK + Zub
1.4 CRDi	66	11/10→						
1.6	90 - 91	11/10→						
1.6 CRDI	100	04/11→						
1.6 GDI	103	11/10→						
1.6 CRDi	94	11/10→12/17	➡	10/11→		**13.0460-5650.2**	**605650**	AKE 25337 15,5 + WK + Zub
Brake Disc								
1.4	74 - 80	11/10→	➡			**24.0110-0398.1**	**410398**	Ø 262 Brake Disc Thickness [mm] 10 Minimum thickness [mm] 8.4
1.4 CRDi	66	11/10→						
1.6	90 - 91	11/10→						
1.6 CRDi	94	11/10→12/17						
1.6 CRDI	100	04/11→						
1.6 GDI	103	11/10→						
HYUNDAI - ACCENT V Saloon (HC) 01/17→								
Brake Pad Set, disc brake								
1.4	74	07/18→	➡			**13.0460-5650.2**	**605650**	AKE 25337 15,5 + WK + Zub
Brake Disc								
1.4	74	07/18→	➡			**24.0110-0398.1**	**410398**	Ø 262 Brake Disc Thickness [mm] 10 Minimum thickness [mm] 8.4
HYUNDAI - BAYON (BC3) 05/21→								
Brake Pad Set, disc brake								
1.0 T-GDI	74	05/21→	➡			**13.0460-5650.2**	**605650**	AKE 25337 15,5 + WK + Zub
1.0 T-GDI 48V-Hybrid	74 - 88	05/21→						
1.2 MPI	62	05/21→						
1.4 MPI	74	05/21→						
Brake Disc								
1.0 T-GDI	74	05/21→	➡			**24.0110-0398.1**	**410398**	Ø 262 Brake Disc Thickness [mm] 10 Minimum thickness [mm] 8.4
1.0 T-GDI 48V-Hybrid	74 - 88	05/21→						
1.2 MPI	62	05/21→						
1.4 MPI	74	05/21→						
HYUNDAI - COUPE I (RD) 05/96→04/02								
Brake Pad Set, disc brake								
1.6 16V	85	03/98→04/02	⬅			**13.0460-5933.2**	**605933**	AKE 21725 16,8 + WK
1.6 i 16V	79 - 84	12/96→04/02						
2.0	101	08/99→01/02						
2.0 16V	99 - 102	08/96→04/02						
F2 Evolution	115	01/99→12/01						
HYUNDAI - ELANTRA III (XD) 03/00→08/06								
Brake Pad Set, disc brake								
1.6	66 - 79	06/00→07/06	⬅	→ 05/01		**13.0460-5933.2**	**605933**	AKE 21725 16,8 + WK
1.8	97	06/00→07/06						
2.0	102 - 104	06/00→07/06						
HYUNDAI - ELANTRA III Saloon (XD) 03/00→09/06								
Brake Pad Set, disc brake								
1.6	66 - 79	06/00→07/06	⬅	→ 05/01		**13.0460-5933.2**	**605933**	AKE 21725 16,8 + WK

	kW				! #			
HYUNDAI - ELANTRA III Saloon (XD) 03/00→09/06								
Brake Pad Set, disc brake								
1.8 2.0	79 - 97 102 - 104	06/00→07/06 06/00→07/06	←	→ 05/01		**13.0460-5933.2**	**605933**	AKE 21725 16,8 + WK
HYUNDAI - ELANTRA V Coupe (JK) 09/12→								
Brake Pad Set, disc brake								
1.6 1.8	96 108 - 110	12/14→ 09/12→	→	→ 08/15		**13.0460-5650.2**	**605650**	AKE 25337 15,5 + WK + Zub
HYUNDAI - ELANTRA V Saloon (MD, UD) 09/10→								
Brake Pad Set, disc brake								
1.6	94 - 97	04/11→04/16	→	→ 08/15		**13.0460-5650.2**	**605650**	AKE 25337 15,5 + WK + Zub
1.6 1.6 CRDi 1.8	103 94 110	06/11→08/15 02/11→12/15 09/10→	→			**13.0460-5650.2**	**605650**	AKE 25337 15,5 + WK + Zub
HYUNDAI - GRAND SANTA FÉ 01/13→								
Brake Caliper								
2.2 CRDi All-wheel Drive 3.0 GDi All-wheel Drive 3.3 3.3 All-wheel Drive 3.3 GDi All-wheel Drive	145 183 - 194 183 - 199 199 210	06/13→ 07/13→ 01/14→ 02/14→ 07/13→	→			**24.3431-1717.5**	**241365**	MAN without holder
			→			**24.3431-1718.5**	**241366**	MAN without holder
HYUNDAI - H-1 Cargo (TQ) 09/07→								
Brake Caliper								
2.4 2.5 CRDi	129 100 - 125	03/08→ 02/08→	→			**24.3421-1717.5**	**241375**	without holder
			→			**24.3421-1718.5**	**241376**	without holder
2.5 CRDi	81 - 85	02/08→	→	+ ABS;		**24.3421-1717.5**	**241375**	without holder
2.5 CRDI	94	01/09→	→	+ ABS;		**24.3421-1718.5**	**241376**	without holder
HYUNDAI - H-1 Travel (TQ) 09/07→								
Brake Caliper								
2.4 2.4 i 2.4 LPG 2.5 CRDi 2.5 CRDI 2.5 TDCi	101 126 - 129 117 81 - 125 94 - 100 74	02/08→ 02/08→ 07/12→ 05/08→ 02/08→ 09/07→	→			**24.3421-1717.5**	**241375**	without holder
			→			**24.3421-1718.5**	**241376**	without holder
2.5 CRDi	85 - 129	08/11→	→	+ ABS;		**24.3421-1717.5**	**241375**	without holder
			→	+ ABS;		**24.3421-1718.5**	**241376**	without holder
HYUNDAI - i10 I (PA) 10/07→								
Brake Caliper								
1.0 1.1 1.1 LPG 1.2 1.2 LPG	51 48 - 51 48 - 51 55 - 63 57	01/11→12/17 12/07→12/13 01/09→12/13 10/08→12/13 01/10→12/13	←			**24.3511-1725.5**	**241399**	MAN without holder
			←			**24.3511-1726.5**	**241400**	MAN without holder
1.2	64	12/15→	→			**24.3344-1739.5**	**241371**	without holder + FSB
			→			**24.3344-1740.5**	**241372**	without holder + FSB
Brake Pad Set, disc brake								
1.2	64	12/15→	→			**13.0460-5650.2**	**605650**	AKE 25337 15,5 + WK + Zub
HYUNDAI - i10 II (BA, IA) 08/13→								
Brake Caliper								
1.0 1.2	49 64	08/13→ 12/13→	←			**24.3511-1725.5**	**241399**	MAN without holder

© 2022 Continental Aftermarket & Services GmbH

	kW				! #			
HYUNDAI - i10 II (BA, IA) 08/13→								
Brake Caliper								
1.0 1.2	49 64	08/13→ 12/13→	←			**24.3511-1726.5**	**241400**	MAN without holder
			→			**24.3344-1739.5**	**241371**	without holder + FSB
			→			**24.3344-1740.5**	**241372**	without holder + FSB
1.0 LPG	49 - 51	02/14→	→			**24.3344-1739.5**	**241371**	without holder + FSB
			→			**24.3344-1740.5**	**241372**	without holder + FSB
Brake Pad Set, disc brake								
1.0 1.0 LPG 1.2	49 49 - 51 64	08/13→ 02/14→ 12/13→	→			**13.0460-5650.2**	**605650**	AKE 25337 15,5 + WK + Zub
HYUNDAI - i10 II Saloon 12/13→								
Brake Caliper								
1.2	64	08/15→	→			**24.3344-1739.5**	**241371**	without holder + FSB
			→			**24.3344-1740.5**	**241372**	without holder + FSB
Brake Pad Set, disc brake								
1.2	64	08/15→	→			**13.0460-5650.2**	**605650**	AKE 25337 15,5 + WK + Zub
HYUNDAI - i10 III (AC3, AI3) 09/19→								
Brake Pad Set, disc brake								
1.0 MPi 1.0 T-GDi 1.2 MPi	49 74 62	09/19→ 02/20→ 09/19→	→			**13.0460-5650.2**	**605650**	AKE 25337 15,5 + WK + Zub
HYUNDAI - i20 I (PB, PBT) 08/08→								
Brake Caliper								
1.2	56 - 63	08/08→12/15	←	- ESP;		**24.3511-1725.5**	**241399**	MAN without holder
1.2 LPG 1.6	60 91	01/09→08/14 12/08→	←	- ESP;		**24.3511-1726.5**	**241400**	MAN without holder
HYUNDAI - i20 II (GB, IB) 11/14→								
Brake Caliper								
1.0 T-GDI	74 - 88	01/16→	→			**24.3344-1739.5**	**241371**	without holder + FSB
1.1 CRDi 1.2 1.2 LPG 1.2 LPGI 1.4 1.4 CRDi	55 55 - 62 55 61 74 66	11/14→ 11/14→ 01/19→ 11/14→ 11/14→ 11/14→	→			**24.3344-1740.5**	**241372**	without holder + FSB
Brake Pad Set, disc brake								
1.0 T-GDI	74 - 88	01/16→	→			**13.0460-5650.2**	**605650**	AKE 25337 15,5 + WK + Zub
1.2 LPG 1.2 LPGI	55 61	01/19→ 11/14→						
1.1 CRDi 1.2 1.4 1.4 CRDi	55 55 - 62 74 66	11/14→ 11/14→ 11/14→ 11/14→	→	12/14→		**13.0460-5650.2**	**605650**	AKE 25337 15,5 + WK + Zub
Brake Disc								
1.0 T-GDI	74 - 88	01/16→	→			**24.0110-0398.1**	**410398**	Ø 262 Brake Disc Thickness [mm] 10 Minimum thickness [mm] 8.4
1.2 LPG 1.2 LPGI	55 61	01/19→ 11/14→						
1.1 CRDi 1.2 1.4 1.4 CRDi	55 55 - 62 74 66	11/14→ 11/14→ 11/14→ 11/14→	→	12/14→		**24.0110-0398.1**	**410398**	Ø 262 Brake Disc Thickness [mm] 10 Minimum thickness [mm] 8.4
HYUNDAI - i20 II Coupe (GB) 03/15→								
Brake Caliper								
1.0 T-GDI	74 - 88	01/16→	→			**24.3344-1739.5**	**241371**	without holder + FSB

	kW				! #			
HYUNDAI - i20 II Coupe (GB) 03/15→								
Brake Caliper								
1.1 CRDi	55	05/15→				24.3344-1740.5	241372	without holder + FSB
1.2	55 - 62	03/15→						
1.4	74	05/15→						
1.4 CRDi	66	05/15→						
Brake Pad Set, disc brake								
1.0 T-GDI	74 - 88	01/16→				13.0460-5650.2	605650	AKE 25337 15,5 + WK + Zub
1.1 CRDi	55	05/15→						
1.2	55 - 62	03/15→						
1.4	74	05/15→						
1.4 CRDi	66	05/15→						
Brake Disc								
1.0 T-GDI	74 - 88	01/16→				24.0110-0398.1	410398	Ø 262 Brake Disc Thickness [mm] 10 Minimum thickness [mm] 8.4
1.1 CRDi	55	05/15→						
1.2	55 - 62	03/15→						
1.4	74	05/15→						
1.4 CRDi	66	05/15→						
HYUNDAI - i20 II Hatchback Van (GB, IB) 11/14→								
Brake Caliper								
1.0 T-GDi	74	01/16→				24.3344-1739.5	241371	without holder + FSB
1.1 CRDi	55	05/15→						
1.2 MPI	55 - 62	05/15→				24.3344-1740.5	241372	without holder + FSB
1.4 CRDi	66	05/15→						
1.4 MPi	74	05/15→						
Brake Pad Set, disc brake								
1.0 T-GDi	74	01/16→				13.0460-5650.2	605650	AKE 25337 15,5 + WK + Zub
1.1 CRDi	55	05/15→						
1.2 MPI	55 - 62	05/15→						
1.4 CRDi	66	05/15→						
1.4 MPi	74	05/15→						
Brake Disc								
1.0 T-GDi	74	01/16→				24.0110-0398.1	410398	Ø 262 Brake Disc Thickness [mm] 10 Minimum thickness [mm] 8.4
1.1 CRDi	55	05/15→						
1.2 MPI	55 - 62	05/15→						
1.4 CRDi	66	05/15→						
1.4 MPi	74	05/15→						
HYUNDAI - i20 III (BC3, BI3) 08/20→								
Brake Pad Set, disc brake								
1.0 T-GDI	74	08/20→				13.0460-5650.2	605650	AKE 25337 15,5 + WK + Zub
1.0 T-GDI hybrid 48V	74 - 88	08/20→						
1.2	62	08/20→						
Brake Disc								
1.0 T-GDI	74	08/20→				24.0110-0398.1	410398	Ø 262 Brake Disc Thickness [mm] 10 Minimum thickness [mm] 8.4
1.0 T-GDI hybrid 48V	74 - 88	08/20→						
1.2	62	08/20→						
HYUNDAI - i20 ACTIVE (IB, GB) 09/15→								
Brake Caliper								
1.0 T-GDI	74 - 88	09/15→				24.3344-1739.5	241371	without holder + FSB
1.4	73 - 74	09/15→				24.3344-1740.5	241372	without holder + FSB
1.4 CRDI	66	09/15→						
Brake Pad Set, disc brake								
1.0 T-GDI	74 - 88	09/15→				13.0460-5650.2	605650	AKE 25337 15,5 + WK + Zub
1.4	73 - 74	09/15→						
1.4 CRDI	66	09/15→						

© 2022 Continental Aftermarket & Services GmbH

	kW				! #			
HYUNDAI - i20 ACTIVE (IB, GB) 09/15→								
Brake Disc								
1.0 T-GDI	74 - 88	09/15→				24.0110-0398.1	410398	Ø 262 Brake Disc Thickness [mm] 10 Minimum thickness [mm] 8.4
1.4	73 - 74	09/15→						
1.4 CRDI	66	09/15→						
HYUNDAI - i30 (GD) 06/11→								
Brake Pad Set, disc brake								
1.4	73 - 74	12/11→12/16				13.0460-5650.2	605650	AKE 25337 15,5 + WK + Zub
1.4 CRDi	66	12/11→12/16						
1.4 LPG	73	01/13→						
1.6	88 - 96	12/11→						
1.6 CRDi	94 - 100	11/11→12/16						
1.6 GDI	99	12/11→12/16						
1.6 T-GDI	137	01/15→						
1.8	110	01/12→						
1.6 CRDi	81	12/11→12/16		06/12→		13.0460-5650.2	605650	AKE 25337 15,5 + WK + Zub
HYUNDAI - i30 (PDE, PD, PDEN) 11/16→								
Brake Pad Set, disc brake								
1.0 T-GDI	88	11/16→		+ eFSB		13.0460-5650.2	605650	AKE 25337 15,5 + WK + Zub
1.0 T-GDI hybrid 48V	88	03/20→						
1.4 MPI	73 - 74	11/16→						
1.4 T-GDI	103	11/16→						
1.5	81	06/20→						
1.5 T-GDI hybrid 48V	118	03/20→						
1.6 CRDi	70 - 100	11/16→						
1.6 CRDi hybrid 48V	100	03/20→						
HYUNDAI - i30 Coupe 05/13→								
Brake Pad Set, disc brake								
1.4	73 - 74	05/13→				13.0460-5650.2	605650	AKE 25337 15,5 + WK + Zub
1.6 CRDi	81 - 100	12/14→						
1.6 GDI	99	05/13→						
1.6 T-GDI	137	01/15→						
1.4 CRDi	66	05/13→		+ eFSB		13.0460-5650.2	605650	AKE 25337 15,5 + WK + Zub
1.6 CRDi	94	05/13→						
1.6 MPI	88 - 96	06/14→		for vehicles with start-stop function / + eFSB		13.0460-5650.2	605650	AKE 25337 15,5 + WK + Zub
HYUNDAI - i30 Estate (GD) 06/12→								
Brake Pad Set, disc brake								
1.4	73 - 74	06/12→				13.0460-5650.2	605650	AKE 25337 15,5 + WK + Zub
1.4 CRDi	66	06/12→						
1.6	88 - 95	06/12→						
1.6 CRDi	81 - 100	06/12→						
1.6 GDI	99	06/12→						
HYUNDAI - i30 Estate (PDE) 03/17→								
Brake Pad Set, disc brake								
1.0 T-GDI	88	03/17→		+ eFSB		13.0460-5650.2	605650	AKE 25337 15,5 + WK + Zub
1.0 T-GDI hybrid 48V	88	03/20→						
1.4 MPI	73 - 74	03/17→						
1.4 T-GDI	103	03/17→						
1.5	81	06/20→						
1.5 T-GDI Hybrid 48V	118	03/20→						
1.6 CRDi	81 - 100	03/17→						
1.6 CRDi hybrid 48V	100	03/20→						
HYUNDAI - i30 FASTBACK (PDE, PDEN) 06/17→								
Brake Pad Set, disc brake								
1.0 T-GDI	88	06/17→		+ eFSB		13.0460-5650.2	605650	AKE 25337 15,5 + WK + Zub
1.0 T-GDI hybrid 48V	88	06/17→						
1.4 T-GDI	103	06/17→						

	kW				! #			
HYUNDAI - i30 FASTBACK (PDE, PDEN) 06/17→								
Brake Pad Set, disc brake								
1.5 T-GDI Hybrid 48V 1.6 CRDi 1.6 CRDi hybrid 48V	118 100 100	03/20→ 08/18→ 03/20→	➡	+ eFSB		**13.0460-5650.2**	**605650**	AKE 25337 15,5 + WK + Zub
HYUNDAI - i30 Hatchback Van (GDE) 06/12→								
Brake Pad Set, disc brake								
1.4 MPI 1.6 CRDI 1.6 GDI	74 81 99	05/15→ 05/15→ 05/15→	➡			**13.0460-5650.2**	**605650**	AKE 25337 15,5 + WK + Zub
HYUNDAI - i30 Hatchback Van (PDE) 11/16→								
Brake Pad Set, disc brake								
1.0 T-GDi 1.4 T-GDi	88 103	11/16→ 11/16→	➡	+ eFSB		**13.0460-5650.2**	**605650**	AKE 25337 15,5 + WK + Zub
HYUNDAI - i30 Kombi Van (GDE, GD) 06/12→								
Brake Pad Set, disc brake								
1.4 MPI 1.6 CRDI 1.6 GDI	74 81 99	05/15→ 05/15→ 05/15→	➡			**13.0460-5650.2**	**605650**	AKE 25337 15,5 + WK + Zub
HYUNDAI - i30 Kombi Van (PDE) 03/17→								
Brake Pad Set, disc brake								
1.0 T-GDi 1.4 T-GDi 1.6 CRDi VGT	88 103 81 - 100	03/17→ 03/17→ 03/17→	➡	+ eFSB		**13.0460-5650.2**	**605650**	AKE 25337 15,5 + WK + Zub
HYUNDAI - i40 I (VF) 03/12→								
Brake Caliper								
1.6 GDI 1.7 CRDi	99 85 - 100	03/12→ 03/12→	⬅	Rim Size [in]: 17 / 18; ◻		**24.3601-1745.5**	**241389**	without holder
1.7 CRDI 2.0 CVVT 2.0 GDi 2.0 GDI	103 - 104 110 - 130 121 130 - 131	10/12→ 03/12→ 12/14→ 03/12→	⬅	Rim Size [in]: 17 / 18; ◼		**24.3601-1746.5**	**241390**	without holder
Brake Pad Set, disc brake								
1.6 CRDi 1.6 GDI 1.7 CRDi 1.7 CRDI 2.0 CVVT 2.0 GDi 2.0 GDI	85 - 100 99 85 - 100 103 - 104 110 - 130 121 130 - 131	07/18→ 03/12→ 03/12→ 10/12→ 03/12→ 12/14→ 03/12→	➡	Rim Size [in]: 16 / 17 / 18		**13.0460-5650.2**	**605650**	AKE 25337 15,5 + WK + Zub
HYUNDAI - i40 I CW (VF) 07/11→								
Brake Caliper								
1.6 GDI 1.7 CRDi	99 85 - 104	07/11→ 07/11→	⬅	Rim Size [in]: 17 / 18; ◻		**24.3601-1745.5**	**241389**	without holder
2.0 CVVT 2.0 GDi 2.0 GDI	110 - 130 121 130	07/11→ 12/14→ 07/11→	⬅	Rim Size [in]: 17 / 18; ◼		**24.3601-1746.5**	**241390**	without holder
Brake Pad Set, disc brake								
1.6 CRDi 1.6 GDI 1.7 CRDi 2.0 CVVT 2.0 GDi 2.0 GDI	85 - 100 99 85 - 104 110 - 130 121 130	07/18→ 07/11→ 07/11→ 07/11→ 12/14→ 07/11→	➡	Rim Size [in]: 16 / 17 / 18		**13.0460-5650.2**	**605650**	AKE 25337 15,5 + WK + Zub

© 2022 Continental Aftermarket & Services GmbH

	kW				! #			
HYUNDAI - i40 I Kombi Van (VF) 07/11→								
Brake Caliper								
1.7 CRDI	85	05/15→	←	Rim Size [in]: 17 / 18; ⊞		**24.3601-1745.5**	**241389**	without holder
			←	Rim Size [in]: 17 / 18; ⊞		**24.3601-1746.5**	**241390**	without holder
Brake Pad Set, disc brake								
1.7 CRDI	85	05/15→	→	Rim Size [in]: 16 / 17 / 18		**13.0460-5650.2**	**605650**	AKE 25337 15,5 + WK + Zub
HYUNDAI - IONIQ (AE) 03/16→								
Brake Pad Set, disc brake								
1.6 GDI Hybrid 1.6 GDI Plug-in Hybrid Electric Elektro	77 - 104 77 88 - 100 25	03/16→ 03/16→ 03/16→ 03/16→	→			**13.0460-5650.2**	**605650**	AKE 25337 15,5 + WK + Zub
HYUNDAI - ix35 (LM, EL, ELH) 08/09→								
Brake Pad Set, disc brake								
2.0 2.0 AWD 2.0 Flex	114 114 131	11/13→ 11/13→ 05/12→	→	+ eFSB		**13.0460-5650.2**	**605650**	AKE 25337 15,5 + WK + Zub
HYUNDAI - KONA (OS, OSE, OSI) 06/17→								
Brake Pad Set, disc brake								
1.0 T-GDi 1.6 CRDi 1.6 CRDi e-VGT 1.6 CRDi e-VGT AWD 1.6 T-GDi 1.6 T-GDi 4WD	88 85 100 100 130 130	07/17→ 08/18→ 07/17→ 07/17→ 07/17→ 06/17→	←	Brake Size: 16"		**13.0460-5526.2**	**605526**	+ WK + Zub
1.6 GDi Hybrid	77 - 104	06/19→	←			**13.0460-5526.2**	**605526**	+ WK + Zub
			→			**13.0460-5650.2**	**605650**	AKE 25337 15,5 + WK + Zub
EV	100 - 150	04/18→	→			**13.0460-5650.2**	**605650**	AKE 25337 15,5 + WK + Zub
HYUNDAI - KONA SUV Van (OS, OSE, OSI) 06/17→								
Brake Pad Set, disc brake								
1.0 T-GDi	88	07/17→	←	Brake Size: 16"		**13.0460-5526.2**	**605526**	+ WK + Zub
1.6 GDi Hybrid	77 - 104	06/19→	←			**13.0460-5526.2**	**605526**	+ WK + Zub
			→			**13.0460-5650.2**	**605650**	AKE 25337 15,5 + WK + Zub
EV	150	04/18→	→			**13.0460-5650.2**	**605650**	AKE 25337 15,5 + WK + Zub
HYUNDAI - LANTRA I (J-1) 10/90→11/95								
Brake Pad Set, disc brake								
1.6 i.e. 16V 1.8 i.e. 16V	78 - 84 93	10/90→11/95 10/90→11/95	←	12/90→ 04/95		**13.0460-5933.2**	**605933**	AKE 21725 16,8 + WK
HYUNDAI - LANTRA II (J-2) 06/95→12/00								
Brake Pad Set, disc brake								
1.5 12V	65	12/96→09/00	←	→ 05/00; + ABS		**13.0460-5933.2**	**605933**	AKE 21725 16,8 + WK
1.6 16V 1.6 i 1.8 16V 2.0 16V	84 - 87 66 94 102	06/95→09/00 11/95→09/00 11/95→09/00 08/96→09/00	←	→ 05/00		**13.0460-5933.2**	**605933**	AKE 21725 16,8 + WK
1.9 D 2.0	50 100	03/98→09/00 04/97→05/00	←			**13.0460-5933.2**	**605933**	AKE 21725 16,8 + WK
HYUNDAI - LANTRA II Estate (J-2) 06/95→10/00								
Brake Pad Set, disc brake								
1.5 12V	65	04/97→10/00	←	→ 05/00; + ABS		**13.0460-5933.2**	**605933**	AKE 21725 16,8 + WK
1.6 16V 1.6 i 1.8 16V 2.0 16V	84 66 94 102	02/96→10/00 02/96→10/00 02/96→10/00 11/95→10/00	←	→ 05/00		**13.0460-5933.2**	**605933**	AKE 21725 16,8 + WK
1.6 16V 2.0	87 100	06/98→05/00 04/97→05/00	←			**13.0460-5933.2**	**605933**	AKE 21725 16,8 + WK
1.9 D	50	03/98→10/00	←	→ 09/00		**13.0460-5933.2**	**605933**	AKE 21725 16,8 + WK

	kW				! #			
HYUNDAI - MATRIX (FC) 06/01→08/10								
Brake Pad Set, disc brake								
1.5 CRDi 1.6 1.8	60 76 90	10/01→08/10 06/01→08/10 06/01→08/10	←	→ 02/02		**13.0460-5933.2**	**605933**	AKE 21725 16,8 + WK
HYUNDAI - SANTA FÉ II (CM) 10/05→03/15								
Brake Caliper								
2.0 CRDi 2.0 CRDi 4x4 2.2 CRDi 2.2 CRDi 4x4 2.4 2.4 4x4 3.5 4x4	110 85 - 135 145 - 147 145 - 147 128 128 203 - 210	12/10→12/12 03/06→12/12 01/09→12/12 01/09→12/12 11/10→12/12 07/10→12/12 07/10→12/12	→			**24.3431-1717.5**	**241365**	MAN without holder
			→			**24.3431-1718.5**	**241366**	MAN without holder
HYUNDAI - SANTA FÉ II SUV Van (CM) 10/05→03/15								
Brake Caliper								
CRDi CRDi 4x4	145 145	01/09→05/13 01/09→05/13	→			**24.3431-1717.5**	**241365**	MAN without holder
			→			**24.3431-1718.5**	**241366**	MAN without holder
HYUNDAI - SANTA FÉ III (DM, DMA) 09/12→								
Brake Caliper								
2.0 CRDi 2.0 CRDi 4WD 2.2 CRDi 2.2 CRDi 4WD 2.4 2.4 4WD 2.4 CCVT 2.4 CCVT AWD	110 110 - 136 145 145 141 141 129 129	09/12→ 09/12→ 09/12→12/15 09/12→12/15 09/12→12/15 09/12→ 09/12→ 09/12→	→			**24.3431-1717.5**	**241365**	MAN without holder
			→			**24.3431-1718.5**	**241366**	MAN without holder
HYUNDAI - SOLARIS Saloon (HCR) 01/17→								
Brake Pad Set, disc brake								
1.4 1.6	74 89 - 90	01/17→ 01/17→	→			**13.0460-5650.2**	**605650**	AKE 25337 15,5 + WK + Zub
Brake Disc								
1.4 1.6	74 89 - 90	01/17→ 01/17→	→			**24.0110-0398.1**	**410398**	Ø 262 Brake Disc Thickness [mm] 10 Minimum thickness [mm] 8.4
HYUNDAI - SONATA II (Y-2) 09/88→12/93								
Brake Pad Set, disc brake								
1.8 i	70	09/88→10/93	←	10/88→ 04/93		**13.0460-5933.2**	**605933**	AKE 21725 16,8 + WK
2.0 i 2.4 i	74 83	09/88→08/91 09/88→08/91	←	10/88→		**13.0460-5933.2**	**605933**	AKE 21725 16,8 + WK
2.0 i 2.0 i 16V 3.0 i V6	80 96 107	01/91→10/93 01/91→10/93 01/91→10/93	←	→ 04/93		**13.0460-5933.2**	**605933**	AKE 21725 16,8 + WK
HYUNDAI - SONATA III (Y-3) 07/92→12/00								
Brake Pad Set, disc brake								
1.8 GLS 2.0 i	63 77	07/96→05/98 06/94→08/96	←			**13.0460-5933.2**	**605933**	AKE 21725 16,8 + WK
1.8 i 2.0 i 16V 3.0 i V6	72 102 107	05/93→06/98 05/93→06/98 05/93→06/98	←	07/93→ 05/98		**13.0460-5933.2**	**605933**	AKE 21725 16,8 + WK
2.0 i 2.0 i 16V	70 92	08/96→06/98 06/96→06/98	←	→ 05/98		**13.0460-5933.2**	**605933**	AKE 21725 16,8 + WK
HYUNDAI - SONATA IV (EF) 03/98→12/05								
Brake Pad Set, disc brake								
2.0 16V 2.4 16V 2.5 V6 24V	100 105 118	06/98→10/01 03/98→10/01 06/98→10/01	←	→ 09/01		**13.0460-5933.2**	**605933**	AKE 21725 16,8 + WK

© 2022 Continental Aftermarket & Services GmbH

	kW				! #			
HYUNDAI - TUCSON (TL, TLE) 05/15→								
Brake Pad Set, disc brake								
1.6 CRDi 1.6 CRDi All-wheel Drive 1.6 CRDi hybrid 48V 1.6 CRDi hybrid 48V All-wheel Drive 2.0 CRDi Hybrid 48V All-wheel Drive 2.4 GDI All-wheel Drive	85 - 100 85 - 100 85 - 100 100 136 135	08/18→ 08/18→ 03/19→ 03/19→ 10/18→ 07/19→09/20	←	Rim Size [in]: 16		**13.0460-5526.2**	**605526**	+ WK + Zub
			→	+ eFSB		**13.0460-5650.2**	**605650**	AKE 25337 15,5 + WK + Zub
1.6 GDi 1.7 CRDi 2.0 2.0 CRDi 2.0 CRDi All-wheel Drive 2.0 CVVT 2.0 CVVT All-wheel Drive	96 - 97 85 - 104 115 100 100 110 110	06/15→09/20 06/15→09/20 06/15→09/20 06/15→09/20 06/15→09/20 06/15→09/20 06/15→09/20	←	Rim Size [in]: 16; 06/18→		**13.0460-5526.2**	**605526**	+ WK + Zub
			→	+ eFSB		**13.0460-5650.2**	**605650**	AKE 25337 15,5 + WK + Zub
1.6 T-GDi 1.6 T-GDi All-wheel Drive 2.0 2.0 All-wheel Drive 2.0 CRDi All-wheel Drive	130 130 114 114 136	06/15→09/20 06/15→09/20 06/15→09/20 06/15→09/20 06/15→09/20	←	Vehicle Production Country Czech Republic; Rim Size [in]: 16; 06/18→		**13.0460-5526.2**	**605526**	+ WK + Zub
			→	+ eFSB		**13.0460-5650.2**	**605650**	AKE 25337 15,5 + WK + Zub
2.0 All-wheel Drive 2.0 CRDi 2.0 GDi All-wheel Drive	115 136 122	06/15→09/20 06/15→09/20 09/15→09/20	→	+ eFSB		**13.0460-5650.2**	**605650**	AKE 25337 15,5 + WK + Zub
HYUNDAI - TUCSON SUV Van (TLE) 05/15→								
Brake Pad Set, disc brake								
1.6 CRDi 1.6 T-GDi	100 130	08/18→ 06/15→	←	Rim Size [in]: 16		**13.0460-5526.2**	**605526**	+ WK + Zub
			→	+ eFSB		**13.0460-5650.2**	**605650**	AKE 25337 15,5 + WK + Zub
HYUNDAI - VELOSTER (FS) 03/11→12/17								
Brake Pad Set, disc brake								
1.6 1.6 GDi 1.6 GDI 1.6 MPI 1.6 T-GDI	94 95 103 97 137 - 150	06/11→12/17 10/11→12/17 03/11→12/17 04/11→12/17 08/12→12/17	→			**13.0460-5650.2**	**605650**	AKE 25337 15,5 + WK + Zub
INFINITI - EX 09/07→								
Brake Pad Set, disc brake								
25 30d	175 175	04/10→12/13 04/10→	←			**13.0460-5778.2**	**605778**	SUM 23698 16,8 + WK
25 AWD	163	09/07→	←	04/10→		**13.0460-5778.2**	**605778**	SUM 23698 16,8 + WK
37	228 - 235	10/08→	←			**13.0460-5778.2**	**605778**	SUM 23698 16,8 + WK
			←	02/11→; + RUS		**13.0460-5778.2**	**605778**	SUM 23698 16,8 + WK
INFINITI - FX 09/02→12/08								
Brake Disc								
35 35 All-wheel Drive 45 45 All-wheel Drive	206 206 232 232	02/03→12/08 01/03→12/08 02/03→12/08 01/03→12/08	→			**24.0116-0122.1**	**416122**	Ø 308 Brake Disc Thickness [mm] 16 Minimum thickness [mm] 14 Vented
INFINITI - G Convertible 09/10→								
Brake Pad Set, disc brake								
37	235 - 245	09/10→	←	not for rim size [in]: 19		**13.0460-5778.2**	**605778**	SUM 23698 16,8 + WK
INFINITI - G Coupe 09/07→								
Brake Pad Set, disc brake								
37	235 - 245	09/07→	←	for vehicles without sports package		**13.0460-5778.2**	**605778**	SUM 23698 16,8 + WK

	kW				! #			
INFINITI - G Saloon 08/02→								
Brake Pad Set, disc brake								
35 35 X	191 191	10/02→ 08/02→08/04	←			**13.0460-5716.2**	**605716**	21561 17,0 + WK
INFINITI - G Saloon 01/07→								
Brake Pad Set, disc brake								
25	163	01/11→	←	for vehicles without four wheel steering		**13.0460-5778.2**	**605778**	SUM 23698 16,8 + WK
37	235 - 243	10/08→	←	for vehicles without four wheel steering		**13.0460-5778.2**	**605778**	SUM 23698 16,8 + WK
37 X	235	10/08→	←	11/09→; + RUS; for vehicles without four wheel steering		**13.0460-5778.2**	**605778**	SUM 23698 16,8 + WK
INFINITI - M (Y51) 03/10→								
Brake Pad Set, disc brake								
25 30d 37 37 X 56 X	163 175 235 246 300	07/10→ 03/10→ 03/10→ 09/10→ 03/10→	←	for vehicles without four wheel steering		**13.0460-5778.2**	**605778**	SUM 23698 16,8 + WK
35h	225	04/11→	←			**13.0460-5778.2**	**605778**	SUM 23698 16,8 + WK
56	300	03/10→	←	01/12→; for vehicles without four wheel steering		**13.0460-5778.2**	**605778**	SUM 23698 16,8 + WK
Brake Disc								
25 30d 37 37 X 56 X	163 175 235 246 300	07/10→ 03/10→ 03/10→ 09/10→ 03/10→	→	for vehicles without four wheel steering		**24.0116-0122.1**	**416122**	Ø 308 Brake Disc Thickness [mm] 16 Minimum thickness [mm] 14 Vented
35h	225	04/11→	→			**24.0116-0122.1**	**416122**	Ø 308 Brake Disc Thickness [mm] 16 Minimum thickness [mm] 14 Vented
56	300	03/10→	→	01/12→; for vehicles without four wheel steering		**24.0116-0122.1**	**416122**	Ø 308 Brake Disc Thickness [mm] 16 Minimum thickness [mm] 14 Vented
INFINITI - M35 01/05→								
Brake Pad Set, disc brake								
3.5 h	268	01/10→	←	04/11→		**13.0460-5778.2**	**605778**	SUM 23698 16,8 + WK
Brake Disc								
3.5 h	268	01/10→	→	04/11→		**24.0116-0122.1**	**416122**	Ø 308 Brake Disc Thickness [mm] 16 Minimum thickness [mm] 14 Vented
INFINITI - M37 01/10→								
Brake Pad Set, disc brake								
3.7 3.7 Allrad	243 - 246 246	01/10→ 01/11→	←	01/12→; for vehicles without four wheel steering		**13.0460-5778.2**	**605778**	SUM 23698 16,8 + WK
Brake Disc								
3.7 3.7 Allrad	243 - 246 246	01/10→ 01/11→	→	01/12→; for vehicles without four wheel steering		**24.0116-0122.1**	**416122**	Ø 308 Brake Disc Thickness [mm] 16 Minimum thickness [mm] 14 Vented
INFINITI - M45 01/05→								
Brake Pad Set, disc brake								
4.5	250	01/05→	←	11/09→		**13.0460-5778.2**	**605778**	SUM 23698 16,8 + WK
INFINITI - Q50 04/13→								
Brake Pad Set, disc brake								
2.0 T 50 D 50 Hybrid 50 Hybrid AWD	155 125 268 268	04/14→ 04/13→ 04/13→ 04/13→	←			**13.0460-5686.2**	**605686**	AKE + WK

© 2022 Continental Aftermarket & Services GmbH

	kW				! #			
INFINITI - Q50 04/13→								
Brake Disc								
2.0 T 50 D 50 Hybrid 50 Hybrid AWD	155 125 268 268	04/14→ 04/13→ 04/13→ 04/13→	➡			**24.0116-0122.1**	**416122**	Ø 308 Brake Disc Thickness [mm] 16 Minimum thickness [mm] 14 Vented
INFINITI - Q60 Convertible 10/13→								
Brake Pad Set, disc brake								
3.7	235 - 245	10/13→	⬅	not for rim size [in]: 19		**13.0460-5778.2**	**605778**	SUM 23698 16,8 + WK
INFINITI - Q60 Coupe 09/16→								
Brake Pad Set, disc brake								
2.0 T	155	09/16→	⬅	for vehicles without sports package		**13.0460-5686.2**	**605686**	AKE + WK
Brake Disc								
2.0 T	155	09/16→	➡	for vehicles without sports package		**24.0116-0122.1**	**416122**	Ø 308 Brake Disc Thickness [mm] 16 Minimum thickness [mm] 14 Vented
INFINITI - Q60 Coupe 08/13→								
Brake Pad Set, disc brake								
3.7	235 - 245	10/13→	⬅	for vehicles without sports package		**13.0460-5778.2**	**605778**	SUM 23698 16,8 + WK
INFINITI - Q70 (Y51) 03/13→								
Brake Pad Set, disc brake								
2.2 D 2.5	125 163	10/14→ 05/15→	⬅	Basis + GT + GT Prem		**13.0460-5778.2**	**605778**	SUM 23698 16,8 + WK
3.0 3.7 3.7 AWD 5.6 AWD	175 235 245 300	03/13→ 03/13→ 01/14→ 01/15→	⬅	for vehicles without four wheel steering		**13.0460-5778.2**	**605778**	SUM 23698 16,8 + WK
3.5 Hybrid	225	03/13→	⬅			**13.0460-5778.2**	**605778**	SUM 23698 16,8 + WK
Brake Disc								
2.2 D 2.5	125 163	10/14→ 05/15→	➡	Basis + GT + GT Prem		**24.0116-0122.1**	**416122**	Ø 308 Brake Disc Thickness [mm] 16 Minimum thickness [mm] 14 Vented
3.0 3.7 3.7 AWD 5.6 AWD	175 235 245 300	03/13→ 03/13→ 01/14→ 01/15→	➡	for vehicles without four wheel steering		**24.0116-0122.1**	**416122**	Ø 308 Brake Disc Thickness [mm] 16 Minimum thickness [mm] 14 Vented
3.5 Hybrid	225	03/13→	➡			**24.0116-0122.1**	**416122**	Ø 308 Brake Disc Thickness [mm] 16 Minimum thickness [mm] 14 Vented
INFINITI - QX50 I 08/13→								
Brake Pad Set, disc brake								
2.5 AWD 30d AWD 37 AWD	163 175 235 - 242	02/14→ 08/13→ 08/13→	⬅			**13.0460-5778.2**	**605778**	SUM 23698 16,8 + WK
INFINITI - QX50 II 04/18→								
Brake Pad Set, disc brake								
2.0 AWD	197	04/18→	⬅	→ 05/20		**13.0460-5686.2**	**605686**	AKE + WK
ISUZU - AXIOM SUV 09/01→12/04								
Brake Pad Set, disc brake								
3.5	187	09/03→12/04	⬅			**13.0460-5853.2**	**605853**	SUM 23488 15,4 + WK
			➡			**13.0460-5927.2**	**605927**	AKE 21875 16,0 + WK
Brake Disc								
3.5	187	09/03→12/04	➡			**24.0118-0122.1**	**418122**	Ø 313.5 Brake Disc Thickness [mm] 18 Minimum thickness [mm] 16.6 Vented

© 2022 Continental Aftermarket & Services GmbH

	kW				! #			
ISUZU - TROOPER II (UB) 08/91→04/00								
Brake Pad Set, disc brake								
3.1 TD 3.2	84 130	08/91→07/98 08/91→07/98				**13.0460-5927.2**	**605927**	AKE 21875 16,0 + WK
Brake Disc								
3.1 TD 3.2	84 130	08/91→07/98 08/91→07/98				**24.0118-0122.1**	**418122**	Ø 313.5 Brake Disc Thickness [mm] 18 Minimum thickness [mm] 16.6 Vented
ISUZU - TROOPER II Open Off-Road Vehicle (UB) 08/91→07/98								
Brake Pad Set, disc brake								
3.1 TD 3.2	84 130	08/91→07/98 08/91→07/98				**13.0460-5927.2**	**605927**	AKE 21875 16,0 + WK
Brake Disc								
3.1 TD 3.2	84 130	08/91→07/98 08/91→07/98				**24.0118-0122.1**	**418122**	Ø 313.5 Brake Disc Thickness [mm] 18 Minimum thickness [mm] 16.6 Vented
ISUZU - TROOPER III 05/98→08/04								
Brake Pad Set, disc brake								
3.0 DTI	117	05/98→08/04		08/98→		**13.0460-5927.2**	**605927**	AKE 21875 16,0 + WK
3.0 Tdi 3.5 V6 24V AWD	117 158	10/00→06/02 04/00→08/04				**13.0460-5927.2**	**605927**	AKE 21875 16,0 + WK
Brake Disc								
3.0 DTI	117	05/98→08/04		08/98→		**24.0118-0122.1**	**418122**	Ø 313.5 Brake Disc Thickness [mm] 18 Minimum thickness [mm] 16.6 Vented
3.0 Tdi 3.5 V6 24V AWD	117 158	10/00→06/02 04/00→08/04				**24.0118-0122.1**	**418122**	Ø 313.5 Brake Disc Thickness [mm] 18 Minimum thickness [mm] 16.6 Vented
ISUZU - TROOPER III Open Off-Road Vehicle 04/00→08/04								
Brake Pad Set, disc brake								
3.0 DTI 3.5 V6 24V	118 158	04/00→08/04 04/00→08/04				**13.0460-5927.2**	**605927**	AKE 21875 16,0 + WK
Brake Disc								
3.0 DTI 3.5 V6 24V	118 158	04/00→08/04 04/00→08/04				**24.0118-0122.1**	**418122**	Ø 313.5 Brake Disc Thickness [mm] 18 Minimum thickness [mm] 16.6 Vented
ISUZU - VEHICROSS (_U_) 04/97→12/01								
Brake Pad Set, disc brake								
3.2 4x4	158	04/97→12/00				**13.0460-5927.2**	**605927**	AKE 21875 16,0 + WK
Brake Disc								
3.2 4x4	158	04/97→12/00				**24.0118-0122.1**	**418122**	Ø 313.5 Brake Disc Thickness [mm] 18 Minimum thickness [mm] 16.6 Vented
JAGUAR - E-PACE (X540) 09/17→								
Guide Bolt, brake caliper								
1.5 P160 MHEV 1.5 P300e Plug-in Hybrid AWD 2.0 AWD 2.0 D150 2.0 D150 AWD 2.0 D165 2.0 D165 MHEV AWD 2.0 D180 AWD 2.0 D200 MHEV AWD 2.0 D240 AWD 2.0 Flexfuel AWD 2.0 P200 AWD	118 147 - 227 221 110 110 120 120 132 150 177 183 147 - 183	11/20→ 11/20→ 09/17→ 09/17→ 09/17→ 11/20→ 11/20→ 09/17→ 11/20→ 09/17→ 09/17→ 09/17→				**11.8171-0008.1**	**990049**	ATE

© 2022 Continental Aftermarket & Services GmbH

	kW				! #			
JAGUAR - E-PACE (X540) 09/17→								
Guide Bolt, brake caliper								
2.0 P200 MHEV AWD	147	11/20→	➡			**11.8171-0008.1**	**990049**	ATE
2.0 P250 MHEV AWD	184	11/20→						
2.0 P300 MHEV AWD	221	11/20→						
JAGUAR - F-PACE (X761) 09/15→								
Guide Bolt, brake caliper								
2.0 D165 MHEV	120	10/20→	➡			**11.8171-0008.1**	**990049**	ATE
2.0 D200 MHEV	150	10/20→						
2.0 P400e Plug-in Hybrid	221 - 297	10/20→						
2.0 SD4 AWD	177	02/17→						
2.0 TD4	120 - 132	09/15→						
2.0 TD4 AWD	132	09/15→						
2.0 Ti4	177 - 184	05/16→						
2.0 Ti4 AWD	184 - 221	02/17→						
3.0 D300 MHEV	221	10/20→						
3.0 P400 MHEV	294	10/20→						
3.0 SCV6 AWD	250 - 280	09/15→						
3.0 SDV6 AWD	221	09/15→						
5.0 SCV8 SVR AWD	405	08/18→						
5.0 SVR P550 MHEV	405	10/20→						
JAGUAR - I-PACE (X590) 02/18→								
Guide Bolt, brake caliper								
EV320 AWD	236	10/20→	➡			**11.8171-0008.1**	**990049**	ATE
EV400 AWD	294	02/18→						
JAGUAR - XE (X760) 03/15→								
Guide Bolt, brake caliper								
2.0	147 - 221	03/15→	➡			**11.8171-0008.1**	**990049**	ATE
2.0 AWD	184 - 221	02/17→						
2.0 D	120 - 132	03/15→						
2.0 D200 MHEV	150	11/20→						
2.0 D200 MHEV AWD	150	11/20→						
2.0 D AWD	132 - 177	10/15→						
3.0 S	250 - 280	03/15→						
JAGUAR - XF II (X260) 05/15→								
Guide Bolt, brake caliper								
2.0	147 - 221	05/15→	➡			**11.8171-0008.1**	**990049**	ATE
2.0 AWD	184 - 221	03/17→						
2.0 D	120 - 177	05/15→						
2.0 D200 MHEV	150	11/20→						
2.0 D200 MHEV AWD	150	11/20→						
2.0 D AWD	132 - 177	03/16→						
3.0	250 - 280	05/15→						
3.0 AWD	250 - 280	07/15→						
3.0 D	221	05/15→						
JAGUAR - XF SPORTBRAKE (X260) 07/17→								
Guide Bolt, brake caliper								
2.0	147 - 184	07/17→	➡			**11.8171-0008.1**	**990049**	ATE
2.0 AWD	221	08/18→						
2.0 D	120 - 132	07/17→						
2.0 D200 MHEV	150	11/20→						
2.0 D200 MHEV AWD	150	11/20→						
2.0 D AWD	132 - 177	07/17→						
3.0	280	07/17→						
3.0 AWD	280	07/17→						
3.0 D	221	07/17→						

	kW				! #			
JAGUAR - XJ (X300, X330) 09/94→12/99								
Guide Bolt, brake caliper								
12 6.0	229	09/94→09/97		11/94→ 07/97	2	**11.8171-0008.1**	**990049**	ATE
6 3.2 R Super Charged 4.0	155 235	11/94→07/97 11/94→07/97			2	**11.8171-0008.1**	**990049**	ATE
6 Sovereign 4.0	177	09/94→07/97		11/94→	2	**11.8171-0008.1**	**990049**	ATE
Accessory Kit, parking brake shoes								
12 6.0	229	09/94→09/97		11/94→ 07/97		**03.0137-9700.2**	**669700**	
6 3.2 R Super Charged 4.0	155 235	11/94→07/97 11/94→07/97				**03.0137-9700.2**	**669700**	
6 Sovereign 4.0	177	09/94→07/97		11/94→		**03.0137-9700.2**	**669700**	
JAGUAR - XJ (X308) 09/96→06/03								
Accessory Kit, parking brake shoes								
3.2 4.0	174 209 - 267	07/97→05/03 07/97→05/03				**03.0137-9700.2**	**669700**	
JAGUAR - XK 8 Coupe (X100) 03/96→12/06								
Accessory Kit, parking brake shoes								
4.0 4.0 XKR 4.2 R 4.2	209 - 267 276 219 291	03/96→07/05 05/98→07/05 08/02→07/05 08/02→07/05				**03.0137-9700.2**	**669700**	
4.0	216	05/96→07/05		→ 07/99		**03.0137-9700.2**	**669700**	
JEEP - COMPASS (MP, M6) 01/16→								
Brake Pad Set, disc brake								
1.3 2WD 1.4 MultiAir 1.4 MultiAir All-wheel Drive 1.6 CRD 1.6 Multijet 2.0 CRD 4x4 2.0 Multijet II 4x4	96 - 110 103 125 88 96 103 - 125 127	08/20→ 03/17→ 03/17→ 03/17→ 04/21→ 12/16→ 03/17→	➡			**13.0460-5514.2**	**605514**	TRW + WK + Zub
JEEP - GRAND CHEROKEE II (WJ, WG) 09/98→09/05								
Brake Caliper								
3.1 TD 4x4 4.0 4x4 4.7 V8 4x4	103 140 162 - 190	04/99→12/01 04/99→09/05 04/99→09/05	➡ ➡	◪ ◪		**24.3481-1797.5** **24.3481-1798.5**	**241395** **241396**	ATE without holder ATE without holder
4.0	140	10/98→09/04	➡ ➡	04/99→; ◪ 04/99→; ◪		**24.3481-1797.5** **24.3481-1798.5**	**241395** **241396**	ATE without holder ATE without holder
4.7 V8 4x4	164	04/99→09/05	➡ ➡	08/00→; ◪ 08/00→; ◪		**24.3481-1797.5** **24.3481-1798.5**	**241395** **241396**	ATE without holder ATE without holder
JEEP - RENEGADE SUV (BU, B1, BV) 07/14→								
Guide Bolt, brake caliper								
1.6 1.6 MultiJet 1.6 CRD 2.0 CRD 4x4	96 70 - 88 88	02/20→ 07/14→ 07/14→			2	**11.8171-0008.1**	**990049**	ATE
KIA - CADENZA I (VG) 01/10→								
Brake Pad Set, disc brake								
3.0 GDI 3.5 CVVT	175 213	01/10→12/15 01/10→12/15	➡			**13.0460-5650.2**	**605650**	AKE 25337 15,5 + WK + Zub
KIA - CARENS IV 01/13→								
Brake Pad Set, disc brake								
1.6 GDi 1.7 CRDi 2.0 GDi 2.0 MPI	99 85 - 104 122 - 130 110 - 112	03/13→ 03/13→ 03/13→ 03/13→	➡			**13.0460-5650.2**	**605650**	AKE 25337 15,5 + WK + Zub

© 2022 Continental Aftermarket & Services GmbH

	kW				! #			
KIA - CARENS IV Van (A4) 03/13→								
Brake Pad Set, disc brake								
CRDi	85 - 100	04/15→	➡			**13.0460-5650.2**	**605650**	AKE 25337 15,5 + WK + Zub
KIA - CEE'D (JD) 05/12→								
Brake Pad Set, disc brake								
1.0 T-GDI	74 - 88	07/15→	➡	+ eFSB		**13.0460-5650.2**	**605650**	AKE 25337 15,5 + WK + Zub
1.4 CRDi 90	66	05/12→						
1.4 CVVT	66 - 73	05/12→						
1.4 LPG	72	05/12→						
1.4 MPI	74	04/15→						
1.6 CRDi 110	81	05/12→						
1.6 CRDi 128	94	05/12→						
1.6 CRDi 136	100	07/15→						
1.6 CVVT	95 - 96	01/13→						
1.6 GDI	99	05/12→						
1.6 GT	150	06/13→	➡	07/13→; + eFSB		**13.0460-5650.2**	**605650**	AKE 25337 15,5 + WK + Zub
KIA - CEE'D Combi Van (JD) 07/12→								
Brake Pad Set, disc brake								
1.0 T-GDI	74 - 88	04/15→	➡	+ eFSB		**13.0460-5650.2**	**605650**	AKE 25337 15,5 + WK + Zub
1.4 CRDi	66	04/15→						
1.4 CVVT	73	04/15→						
1.6 CRDi	94	07/12→						
1.6 GDi	99	04/15→						
KIA - CEE'D Sportswagon (JD) 09/12→								
Brake Pad Set, disc brake								
1.0 T-GDI	74 - 88	07/15→	➡	+ eFSB		**13.0460-5650.2**	**605650**	AKE 25337 15,5 + WK + Zub
1.4 CRDi 90	66	09/12→						
1.4 CVVT	73	09/12→						
1.4 LPG	72	01/13→						
1.4 MPI	74	04/15→						
1.6 CRDi 110	81	03/13→						
1.6 CRDi 128	94	09/12→						
1.6 CRDi 136	100	07/15→						
1.6 CVVT	95 - 96	11/14→						
1.6 GDI	99	09/12→						
KIA - CEED (CD) 03/18→								
Brake Pad Set, disc brake								
1.0 T-GDI	74 - 88	03/18→	➡	+ eFSB		**13.0460-5650.2**	**605650**	AKE 25337 15,5 + WK + Zub
1.4	73	03/18→						
1.4 LPG	71	12/18→						
1.4 T-GDI	103	03/18→						
1.5 T-GDI	118	01/21→						
1.6	94	03/18→						
1.6 CRDi 115	85	03/18→						
1.6 CRDi 115 Eco-Dynamics+	85	12/19→						
1.6 CRDi 136	100	03/18→						
1.6 CRDi 136 Eco-Dynamics+	100	12/19→						
1.6 T-GDI GT	150	10/18→						
KIA - CEED Combi Van (CD) 03/18→								
Brake Pad Set, disc brake								
1.4 T-GDI	103	04/18→	➡	+ eFSB		**13.0460-5650.2**	**605650**	AKE 25337 15,5 + WK + Zub
CRDi 115	85	05/18→						
CRDI 136	100	05/18→						
T-GDI	88	05/18→						
GDI Hybrid	77 - 104	12/19→	➡			**13.0460-5650.2**	**605650**	AKE 25337 15,5 + WK + Zub
KIA - CEED Hatchback Van (CD) 03/18→								
Brake Pad Set, disc brake								
1.4 T-GDI	103	03/18→	➡	+ eFSB		**13.0460-5650.2**	**605650**	AKE 25337 15,5 + WK + Zub
CRDi 115	85	03/18→						
CRDI 136	100	03/18→						
T-GDI	88	03/18→						

	kW				! #			
KIA - CEED Hatchback Van (CD) 03/18→								
Brake Pad Set, disc brake								
T-GDI GT	150	10/18→	➡	+ eFSB		**13.0460-5650.2**	**605650**	AKE 25337 15,5 + WK + Zub
KIA - CEED Sportswagon (CD) 03/18→								
Brake Pad Set, disc brake								
1.0 T-GDI	74 - 88	05/18→	➡	+ eFSB		**13.0460-5650.2**	**605650**	AKE 25337 15,5 + WK + Zub
1.4	73	04/18→						
1.4 LPG	71	12/18→						
1.4 T-GDI	103	04/18→						
1.5 T-GDI	118	01/21→						
1.6	94	05/18→						
1.6 CRDi 115	85	05/18→						
1.6 CRDi 115 Eco-Dynamics+	85	12/19→						
1.6 CRDi 136	100	05/18→						
1.6 CRDi 136 Eco-Dynamics+	100	12/19→						
1.6 GDI Hybrid	77 - 104	12/19→						
KIA - JOICE (MTE1P) 02/00→								
Brake Pad Set, disc brake								
2.0	88 - 102	02/00→	⬅	→ 08/03		**13.0460-5933.2**	**605933**	AKE 21725 16,8 + WK
KIA - NIRO (DE) 09/16→								
Brake Pad Set, disc brake								
1.6 GDI Hybrid	77 - 107	09/16→	➡			**13.0460-5650.2**	**605650**	AKE 25337 15,5 + WK + Zub
E-NIRO	100 - 150	08/18→						
KIA - NIRO VAN (DE) 09/16→								
Brake Pad Set, disc brake								
GDI Hybrid	77 - 104	09/16→	➡			**13.0460-5650.2**	**605650**	AKE 25337 15,5 + WK + Zub
KIA - OPTIMA (FSGDS6B) 01/10→								
Brake Pad Set, disc brake								
1.7 CRDi	100	03/12→	➡	→ 12/15; + eFSB		**13.0460-5650.2**	**605650**	AKE 25337 15,5 + WK + Zub
2.0	125	03/12→						
2.0 CVVL	121	03/12→						
2.0 CVVT Hybrid	110 - 140	03/12→						
2.4	132	03/12→						
2.4 CVVT	132	01/12→						
2.0	204	09/10→	➡	03/12→ 12/15; + eFSB		**13.0460-5650.2**	**605650**	AKE 25337 15,5 + WK + Zub
2.4	149	09/10→						
2.4 Hybrid	154	09/11→						
2.0 CVVT	110 - 121	01/11→12/15	➡	+ eFSB		**13.0460-5650.2**	**605650**	AKE 25337 15,5 + WK + Zub
2.4	129	06/10→12/15						
KIA - OPTIMA (JF) 09/15→								
Brake Pad Set, disc brake								
1.6 CRDi	100	09/18→	➡			**13.0460-5650.2**	**605650**	AKE 25337 15,5 + WK + Zub
1.6 T-GDI	132	09/18→						
1.7 CRDi	99 - 104	11/15→						
2.0	110 - 113	09/15→						
2.0 CVVL	120 - 124	09/15→						
2.0 GDI Hybrid	115	09/16→						
2.4 GDI	138	09/15→						
2.4 MPi	126 - 131	09/15→						
2.0 T-GDi	180	09/15→12/17	➡	Rim Size [in]: 16 / 17		**13.0460-5650.2**	**605650**	AKE 25337 15,5 + WK + Zub
KIA - OPTIMA Sportswagon (JF) 09/16→								
Brake Pad Set, disc brake								
1.6 CRDi	100	01/18→	➡			**13.0460-5650.2**	**605650**	AKE 25337 15,5 + WK + Zub
1.6 T-GDI	132	01/18→						
1.7 CRDi	99 - 104	09/16→						

© 2022 Continental Aftermarket & Services GmbH

	kW				! #			
KIA - OPTIMA Sportswagon (JF) 09/16→								
Brake Pad Set, disc brake								
2.0 CVVL	120	09/16→				**13.0460-5650.2**	**605650**	AKE 25337 15,5 + WK + Zub
2.0 T-GDi	180	09/16→		Rim Size [in]: 16 / 17		**13.0460-5650.2**	**605650**	AKE 25337 15,5 + WK + Zub
KIA - PICANTO (TA) 05/11→								
Wheel Brake Cylinder								
1.0	49 - 51	05/11→				**24.3217-1741.3**	**020611**	ALU
1.0 Bi-Fuel 1.0 Flex 1.0 LPG 1.2	60 59 49 63 - 64	05/11→10/14 08/11→ 08/13→ 09/11→				**24.3217-1742.3**	**020612**	ALU
Accessory Kit, parking brake shoes								
1.0 1.0 Bi-Fuel 1.0 Flex 1.0 LPG 1.2	49 - 51 60 59 49 63 - 64	05/11→ 05/11→10/14 08/11→ 08/13→ 09/11→				**03.0137-9349.2**	**669349**	
KIA - PRO CEE'D (JD) 03/13→								
Brake Pad Set, disc brake								
1.0 T-GDI 1.4 CRDi 90 1.4 CVVT 1.4 MPI 1.6 CRDi 110 1.6 CRDi 128 1.6 CRDi 136 1.6 CVVT 1.6 GDI 1.6 GT	74 - 88 66 73 - 74 73 - 74 81 94 100 95 99 150	07/15→ 03/13→ 03/13→ 07/13→ 03/13→ 03/13→ 07/15→ 03/13→ 03/13→ 06/13→		+ eFSB		**13.0460-5650.2**	**605650**	AKE 25337 15,5 + WK + Zub
KIA - PRO CEE'D Hatchback Van (JD) 03/12→								
Brake Pad Set, disc brake								
1.4 CRDi 1.4 CVVT 1.6 CRDi 1.6 GDI	66 73 94 99	05/15→ 05/12→ 10/12→ 04/15→		+ eFSB		**13.0460-5650.2**	**605650**	AKE 25337 15,5 + WK + Zub
KIA - PROCEED (CD) 10/18→								
Brake Pad Set, disc brake								
1.0 T-GDI 1.4 T-GDI 1.5 T-GDI 1.6 CRDi 136 1.6 CRDi 136 Eco-Dynamics+ 1.6 T-GDI 1.6 T-GDI GT	88 103 118 100 100 147 150	10/18→ 10/18→ 01/21→ 10/18→ 12/19→ 10/18→ 10/18→		+ eFSB		**13.0460-5650.2**	**605650**	AKE 25337 15,5 + WK + Zub
KIA - PROCEED Combi Van (CD) 10/18→								
Brake Pad Set, disc brake								
1.4 T-GDI 1.6 CRDI 136 1.6 T-GDI GT	103 100 150	10/18→ 10/18→ 10/18→		+ eFSB		**13.0460-5650.2**	**605650**	AKE 25337 15,5 + WK + Zub
KIA - RIO III (UB) 09/11→								
Brake Caliper								
1.1 CRDi 1.2 1.25 1.25 CVVT 1.25 LPG 1.2 CVVT 1.4 CRDi 1.4 CVVT	55 51 64 63 - 65 63 62 66 79 - 80	09/11→ 09/11→12/17 11/14→12/17 09/11→12/17 09/11→ 11/14→12/17 09/11→ 09/11→				**24.3344-1739.5** **24.3344-1740.5**	**241371** **241372**	without holder + FSB without holder + FSB

	kW				! #			
KIA - RIO III (UB) 09/11→								
Brake Pad Set, disc brake								
1.1 CRDi	55	09/11→	➡			**13.0460-5650.2**	**605650**	AKE 25337 15,5 + WK + Zub
1.2	51	09/11→12/17						
1.25	64	11/14→12/17						
1.25 CVVT	63 - 65	09/11→12/17						
1.25 LPG	63	09/11→						
1.2 CVVT	62	11/14→12/17						
1.4 CRDi	66	09/11→						
1.4 CVVT	79 - 80	09/11→						
1.6 CVVT	90	06/12→						
Brake Disc								
1.1 CRDi	55	09/11→	➡			**24.0110-0398.1**	**410398**	Ø 262 Brake Disc Thickness [mm] 10 Minimum thickness [mm] 8.4
1.2	51	09/11→12/17						
1.25	64	11/14→12/17						
1.25 CVVT	63 - 65	09/11→12/17						
1.25 LPG	63	09/11→						
1.2 CVVT	62	11/14→12/17						
1.4 CRDi	66	09/11→						
1.4 CVVT	79 - 80	09/11→						
1.6 CVVT	90	06/12→						
KIA - RIO III Hatchback Van (UB) 09/11→								
Brake Caliper								
1.1 CRDi	55	09/11→	➡			**24.3344-1739.5**	**241371**	without holder + FSB
1.2 CVVT	63	04/15→12/17						
1.4 CRDi	66	04/15→	➡			**24.3344-1740.5**	**241372**	without holder + FSB
1.4 CVVT	80	04/15→						
Brake Pad Set, disc brake								
1.1 CRDi	55	09/11→	➡			**13.0460-5650.2**	**605650**	AKE 25337 15,5 + WK + Zub
1.2 CVVT	63	04/15→12/17						
1.4 CRDi	66	04/15→						
1.4 CVVT	80	04/15→						
Brake Disc								
1.1 CRDi	55	09/11→	➡			**24.0110-0398.1**	**410398**	Ø 262 Brake Disc Thickness [mm] 10 Minimum thickness [mm] 8.4
1.2 CVVT	63	04/15→12/17						
1.4 CRDi	66	04/15→						
1.4 CVVT	80	04/15→						
KIA - RIO III Saloon (UB) 09/10→								
Brake Caliper								
1.25 CVVT	61 - 65	06/11→12/17	➡			**24.3344-1739.5**	**241371**	without holder + FSB
1.2 CVVT	64	11/14→12/17	➡			**24.3344-1740.5**	**241372**	without holder + FSB
1.4 CVVT	79 - 80	06/11→						
Brake Pad Set, disc brake								
1.25 CVVT	61 - 65	06/11→12/17	➡			**13.0460-5650.2**	**605650**	AKE 25337 15,5 + WK + Zub
1.2 CVVT	64	11/14→12/17						
1.4 CVVT	80	10/11→						
1.6 CVVT	90	06/12→						
1.4 CVVT	79	06/11→	➡	09/11→		**13.0460-5650.2**	**605650**	AKE 25337 15,5 + WK + Zub
Brake Disc								
1.25 CVVT	61 - 65	06/11→12/17	➡			**24.0110-0398.1**	**410398**	Ø 262 Brake Disc Thickness [mm] 10 Minimum thickness [mm] 8.4
1.2 CVVT	64	11/14→12/17						
1.4 CVVT	80	10/11→						
1.6 CVVT	90	06/12→						
1.4 CVVT	79	06/11→	➡	09/11→		**24.0110-0398.1**	**410398**	Ø 262 Brake Disc Thickness [mm] 10 Minimum thickness [mm] 8.4
KIA - RIO IV (YB, SC, FB) 01/17→								
Brake Pad Set, disc brake								
1.0 T-GDI 100	74	01/17→	➡			**13.0460-5650.2**	**605650**	AKE 25337 15,5 + WK + Zub
1.0 T-GDI 100 Eco-Dynamics+	74	02/17→						
1.0 T-GDI 120	88	01/17→						

© 2022 Continental Aftermarket & Services GmbH

	kW				! #			
KIA - RIO IV (YB, SC, FB) 01/17→								
Brake Pad Set, disc brake								
1.0 T-GDI 120 Eco-Dynamics+	88	02/17→				**13.0460-5650.2**	**605650**	AKE 25337 15,5 + WK + Zub
1.25	62	01/17→						
1.25 LPG	60	07/20→						
1.2 CVVT	62	05/20→						
1.4	73 - 74	01/17→						
1.4 CRDi 77	57	01/17→						
1.4 CRDi 90	66	01/17→						
1.6	89 - 90	01/17→						
1.6 Flex	94	07/17→						
Brake Disc								
1.0 T-GDI 100	74	01/17→				**24.0110-0398.1**	**410398**	Ø 262 Brake Disc Thickness [mm] 10 Minimum thickness [mm] 8.4
1.0 T-GDI 100 Eco-Dynamics+	74	02/17→						
1.0 T-GDI 120	88	01/17→						
1.0 T-GDI 120 Eco-Dynamics+	88	02/17→						
1.25	62	01/17→						
1.25 LPG	60	07/20→						
1.2 CVVT	62	05/20→						
1.4	73 - 74	01/17→						
1.4 CRDi 77	57	01/17→						
1.4 CRDi 90	66	01/17→						
1.6	89 - 90	01/17→						
1.6 Flex	94	07/17→						
KIA - RIO IV Hatchback Van (YB, SC, FB) 01/17→								
Brake Pad Set, disc brake								
1.0 T-GDI 100	74	01/17→				**13.0460-5650.2**	**605650**	AKE 25337 15,5 + WK + Zub
1.0 T-GDI 120	88	01/17→						
Brake Disc								
1.0 T-GDI 100	74	01/17→				**24.0110-0398.1**	**410398**	Ø 262 Brake Disc Thickness [mm] 10 Minimum thickness [mm] 8.4
1.0 T-GDI 120	88	01/17→						
KIA - RIO IV Saloon (SC, FB) 07/17→								
Brake Pad Set, disc brake								
1.4	73 - 74	07/17→				**13.0460-5650.2**	**605650**	AKE 25337 15,5 + WK + Zub
1.6	90	07/17→						
Brake Disc								
1.4	73 - 74	07/17→				**24.0110-0398.1**	**410398**	Ø 262 Brake Disc Thickness [mm] 10 Minimum thickness [mm] 8.4
1.6	90	07/17→						
KIA - SEPHIA (FA) 01/95→10/97								
Guide Bolt, brake caliper								
1.5 i	59	02/96→10/97			2	**11.8171-0008.1**	**990049**	ATE
1.8 i 16V	82	01/95→10/97						
1.6 i	59	01/95→10/97		→ 06/96	2	**11.8171-0008.1**	**990049**	ATE
KIA - SEPHIA Saloon (FA) 01/92→09/01								
Guide Bolt, brake caliper								
1.5 i	59	02/96→10/97			2	**11.8171-0008.1**	**990049**	ATE
1.8 i 16V	82	01/95→10/97						
1.6 i	59	09/93→10/97		10/93→ 06/96	2	**11.8171-0008.1**	**990049**	ATE
KIA - SORENTO II (XM) 09/09→								
Brake Caliper								
2.0 CRDi	110	11/10→				**24.3431-1717.5**	**241365**	MAN without holder
2.0 CRDi 4WD	110	11/10→						
2.2 CRDi	145 - 147	11/09→				**24.3431-1718.5**	**241366**	MAN without holder
2.2 CRDi 4WD	145 - 147	11/09→						
2.4	130	09/10→12/12						
2.4 AWD	130	09/10→12/12						

	kW				! #			
KIA - SORENTO II (XM) 09/09→								
Brake Caliper								
2.4 CVVT	128 - 141	11/09→				**24.3431-1717.5**	**241365**	MAN without holder
2.4 CVVT 4WD	128 - 141	11/09→				**24.3431-1718.5**	**241366**	MAN without holder
2.4 GDI	141	10/12→						
2.4 GDI 4WD	141	10/12→						
2.4 LPG	126	04/10→12/15						
2.4 LPG 4WD	126	04/10→12/15						
3.5	203 - 204	11/09→						
3.5 4WD	203 - 206	11/09→						
KIA - SORENTO II SUV Van (XM) 06/09→12/15								
Brake Caliper								
CRDi	145	11/09→12/15				**24.3431-1717.5**	**241365**	MAN without holder
CRDi 4WD	145	11/09→12/15						
CVVT	128	06/09→12/15				**24.3431-1718.5**	**241366**	MAN without holder
CVVT 4WD	128	06/09→12/15						
KIA - SOUL II (PS) 02/14→								
Brake Pad Set, disc brake								
1.6 CRDi 128	94	02/14→		Brake Size: 14"		**13.0460-5650.2**	**605650**	AKE 25337 15,5 + WK + Zub
1.6 CRDi 136	100	04/15→						
1.6 CVVT	91 - 95	02/14→						
1.6 CVVT Flex	94	09/14→						
1.6 GDI	97	02/14→						
1.6 LPG	87 - 96	12/14→						
1.6 MPi	90	07/18→						
1.6 TGDI	150	11/16→						
2.0 CVVT	110	08/16→						
2.0 CVVT	113	02/14→		04/14→; Brake Size: 14"		**13.0460-5650.2**	**605650**	AKE 25337 15,5 + WK + Zub
EV Electric	25 - 81	09/14→				**13.0460-5650.2**	**605650**	AKE 25337 15,5 + WK + Zub
KIA - SOUL III (SK3) 01/19→								
Brake Pad Set, disc brake								
E-SOUL	100 - 150	01/19→				**13.0460-5650.2**	**605650**	AKE 25337 15,5 + WK + Zub
KIA - SOUL III Cargo (SK3) 06/20→								
Brake Pad Set, disc brake								
E-SOUL	100 - 150	06/20→				**13.0460-5650.2**	**605650**	AKE 25337 15,5 + WK + Zub
KIA - SPORTAGE IV (QL, QLE) 09/15→								
Brake Pad Set, disc brake								
1.6 CRDi	85 - 100	07/18→		Rim Size [in]: 16		**13.0460-5526.2**	**605526**	+ WK + Zub
1.6 CRDi AWD	100	07/18→		+ eFSB		**13.0460-5650.2**	**605650**	AKE 25337 15,5 + WK + Zub
1.6 CRDi Eco-Dynamics +	85 - 100	03/19→						
1.6 CRDi Eco-Dynamics + AWD	100	03/19→						
1.6 LPG	93	07/20→						
2.0 CRDi Eco-Dynamics + AWD	136	06/18→						
1.6 GDI	97	09/15→		05/18→; Rim Size [in]: 16		**13.0460-5526.2**	**605526**	+ WK + Zub
1.6 T-GDI	130	09/15→						
1.6 TGDI AWD	130	09/15→		+ eFSB		**13.0460-5650.2**	**605650**	AKE 25337 15,5 + WK + Zub
1.7 CRDi	85 - 104	09/15→						
2.0	114 - 115	12/15→						
2.0 Alcohol	114	12/15→						
2.0 AWD	110 - 114	12/15→						
2.0 CRDi	100 - 136	09/15→						
2.0 CRDi AWD	100 - 136	09/15→						
2.0	110	12/15→		+ eFSB		**13.0460-5650.2**	**605650**	AKE 25337 15,5 + WK + Zub
2.4 GDI	135	05/16→						
2.4 GDI AWD	135	09/15→						

© 2022 Continental Aftermarket & Services GmbH

	kW				! #			
KIA - SPORTAGE IV (QL, QLE) 09/15→								
Brake Pad Set, disc brake								
2.0 CRDi AWD	131	09/15→	←	05/18→; Rim Size [in]: 16; Vehicle Production Country Slovakia		**13.0460-5526.2**	**605526**	+ WK + Zub
			→	+ eFSB		**13.0460-5650.2**	**605650**	AKE 25337 15,5 + WK + Zub
KIA - SPORTAGE IV VAN (QL, QLE) 09/15→								
Brake Pad Set, disc brake								
1.6 CRDI Eco-Dynamics + 1.6 CRDI Eco-Dynamics + All-wheel Drive 1.6 T-GDI	100 100 130	03/19→ 03/19→ 05/18→	←	Rim Size [in]: 16		**13.0460-5526.2**	**605526**	+ WK + Zub
			→	+ eFSB		**13.0460-5650.2**	**605650**	AKE 25337 15,5 + WK + Zub
KIA - STONIC (YB) 07/17→								
Brake Pad Set, disc brake								
1.0 T-GDi 1.0 T-GDi Eco-Dynamics + 1.2 CVVT 1.4 CVVT 1.4 LPG 1.6 CRDi	74 - 88 74 - 88 62 73 71 81 - 100	07/17→ 07/20→ 07/17→ 07/17→ 11/18→ 07/17→	→			**13.0460-5650.2**	**605650**	AKE 25337 15,5 + WK + Zub
Brake Disc								
1.0 T-GDi 1.0 T-GDi Eco-Dynamics + 1.2 CVVT 1.4 CVVT 1.4 LPG 1.6 CRDi	74 - 88 74 - 88 62 73 71 81 - 100	07/17→ 07/20→ 07/17→ 07/17→ 11/18→ 07/17→	→			**24.0110-0398.1**	**410398**	Ø 262 Brake Disc Thickness [mm] 10 Minimum thickness [mm] 8.4
KIA - STONIC Hatchback Van (YB) 07/17→								
Brake Pad Set, disc brake								
1.0 T-GDi 1.6 CRDi	74 - 88 85	07/17→ 08/18→	→			**13.0460-5650.2**	**605650**	AKE 25337 15,5 + WK + Zub
Brake Disc								
1.0 T-GDi 1.6 CRDi	74 - 88 85	07/17→ 08/18→	→			**24.0110-0398.1**	**410398**	Ø 262 Brake Disc Thickness [mm] 10 Minimum thickness [mm] 8.4
KIA - XCEED (CD) 06/19→								
Brake Pad Set, disc brake								
1.0 T-GDI 1.4 T-GDI 1.5 T-GDI 1.6 CRDi 115 1.6 CRDi 115 Eco-Dynamics+ 1.6 CRDi 136 1.6 CRDi 136 Eco-Dynamics+ 1.6 GDI Hybrid 1.6 T-GDI	88 103 118 85 85 100 100 77 - 104 147 - 150	06/19→ 06/19→ 01/21→ 06/19→ 12/19→ 06/19→ 12/19→ 12/19→ 06/19→	→	+ eFSB		**13.0460-5650.2**	**605650**	AKE 25337 15,5 + WK + Zub
KIA - XCEED Van (CD) 06/19→								
Brake Pad Set, disc brake								
1.4 T-GDI 1.6 CRDI 1.6 GDI Hybrid 1.6 T-GDI	103 100 77 - 104 150	06/19→ 06/19→ 12/19→ 06/19→	→	+ eFSB		**13.0460-5650.2**	**605650**	AKE 25337 15,5 + WK + Zub
LANCIA - DELTA III (844_) 08/08→08/14								
Guide Bolt, brake caliper								
1.8 1.9 D Multijet	147 140	01/09→08/14 01/09→08/14			2	**11.8171-0008.1**	**990049**	ATE

	kW				! #			
LANCIA - DELTA III (844_) 08/08→08/14								
Guide Bolt, brake caliper								
2.0 D Multijet	120 - 121	09/08→08/14			2	**11.8171-0008.1**	**990049**	ATE
LANCIA - MUSA (350_) 10/04→09/12								
Accessory Kit, brake shoes								
1.3 D Multijet 1.4	51 70	10/04→09/12 10/04→09/12	➡	→ 06/05		**03.0137-9309.2**	**669309**	AP
1.3 D Multijet 1.9 D Multijet	66 - 70 74	09/06→09/12 10/04→09/12	➡			**03.0137-9309.2**	**669309**	AP
LANCIA - Y10 (156_) 03/85→12/95								
Brake Shoe Set								
1.0 1.0 Fire 1.0 Turbo	41 33 - 37 62	03/85→07/89 03/85→02/90 03/85→02/89	➡	06/85→		**03.0137-0273.2**	**650273**	AP Ø 185 Width [mm] 31
1.0 Fire 1.0 Fire All-wheel Drive 1.0 Fire Catalytic-Conv 1.1 Fire 1.1 Fire All-wheel Drive 1.1 i.e. Fire All-wheel Drive 1.3 i.e.	32 32 - 37 33 40 40 37 53	06/85→06/91 12/86→02/92 10/87→02/92 01/95→12/95 01/95→12/95 09/92→12/95 02/89→12/95	➡			**03.0137-0273.2**	**650273**	AP Ø 185 Width [mm] 31
1.1 i.e. Fire 1.1 i.e Fire 1.1 i.e Fire All-wheel Drive	37 42 42	07/89→09/95 08/89→06/92 08/89→06/92	➡	01/90→		**03.0137-0273.2**	**650273**	AP Ø 185 Width [mm] 31
1.3 i.e.	56	11/87→05/93	➡	02/89→		**03.0137-0273.2**	**650273**	AP Ø 185 Width [mm] 31
LANCIA - YPSILON (312_) 05/11→								
Guide Bolt, brake caliper								
0.9 CNG 0.9 TwinAir 1.2 1.2 Bi-fuel 1.3 D Multijet	59 - 63 59 - 63 51 49 70	05/11→ 05/11→ 05/11→ 05/11→ 05/11→			2	**11.8171-0008.1**	**990049**	ATE
1.0 Mild Hybrid	51	03/20→	⬅		2	**11.8171-0008.1**	**990049**	ATE
1.2 Bi-fuel	51	05/11→		04/15→	2	**11.8171-0008.1**	**990049**	ATE
Accessory Kit, brake shoes								
1.0 Mild Hybrid	51	03/20→	➡			**03.0137-9309.2**	**669309**	AP
LANCIA - ZETA (22_) 05/95→10/03								
Guide Bolt, brake caliper								
2.0 16V 2.0 JTD 2.0 JTD 16V	97 - 100 80 81	05/98→09/02 09/99→09/02 04/01→10/03		+ ABS	2	**11.8171-0008.1**	**990049**	ATE
2.0 Turbo	108	05/95→09/02			2	**11.8171-0008.1**	**990049**	ATE
2.1 TD	80	05/96→09/99		06/96→	2	**11.8171-0008.1**	**990049**	ATE
Accessory Kit, parking brake shoes								
2.0 16V 2.0 JTD 2.0 JTD 16V 2.0 Turbo	97 - 100 80 81 108	05/98→09/02 09/99→09/02 04/01→10/03 05/95→09/02				**03.0137-9700.2**	**669700**	
2.1 TD	80	05/96→09/99		06/96→		**03.0137-9700.2**	**669700**	
LAND ROVER - DEFENDER Station Wagon (L663) 09/19→								
Warning Contact, brake pad wear								
D200 MHEV 4x4 D200 SD4 4x4	147 147	09/19→ 09/19→	⬅	for brake disc diameter [mm]: 349; Brake Size: 18"		**24.8190-0819.2**	**620819**	L2= 363
D240 SD4 4x4 D250 MHEV 4x4 D300 MHEV 4x4 P300 Si4 4x4 P400e Hybrid 4x4 P400 I6 MHEV 4x4	177 183 221 221 221 - 297 294	09/19→ 09/20→ 09/20→ 09/19→ 09/20→ 09/19→	➡			**24.8190-0822.2**	**620822**	

© 2022 Continental Aftermarket & Services GmbH

	kW				! #			
LAND ROVER - DEFENDER Van (L663) 02/20→								
Warning Contact, brake pad wear								
2.0 D200 SD4 4x4	147	02/20→	←	for brake disc diameter [mm]: 349; Brake Size: 18"		**24.8190-0819.2**	**620819**	L2= 363
2.0 D240 SD4 4x4	177	02/20→						
2.0 P300 Si4 4x4	221	02/20→	→			**24.8190-0822.2**	**620822**	
2.0 P400e Hybrid 4x4	221 - 297	09/20→						
3.0 D200 MHEV 4x4	147	09/20→						
3.0 D250 MHEV 4x4	183	09/20→						
3.0 D300 MHEV 4x4	221	09/20→						
3.0 P400 I6 MHEV 4x4	294	02/20→						
LAND ROVER - DISCOVERY V (L462) 09/16→								
Warning Contact, brake pad wear								
2.0 Sd4 4x4	177	09/16→	←	JA000001→; Brake Size: 18"		**24.8190-0819.2**	**620819**	L2= 363
2.0 Si4 4x4	221	09/17→						
2.0 Td4 4x4	132	09/16→	→	JA000001→; Brake Size: 18" / 19" / 20"		**24.8190-0822.2**	**620822**	
3.0 D 4x4	155 - 183	09/16→						
3.0 SCV6 4x4	250	09/16→						
3.0 Td6 4x4	190	09/16→						
3.0 D250 MHEV 4x4	183	12/20→	←	Brake Size: 18"		**24.8190-0819.2**	**620819**	L2= 363
3.0 D300 MHEV 4x4	221	12/20→						
3.0 P360 MHEV 4x4	265	12/20→	→			**24.8190-0822.2**	**620822**	
3.0 SDV6 4x4	225	09/18→						
LAND ROVER - DISCOVERY V VAN (L462) 09/16→								
Warning Contact, brake pad wear								
2.0 Sd4 4x4	177	09/16→	←	JA000001→; Brake Size: 18"		**24.8190-0819.2**	**620819**	L2= 363
2.0 Si4 4x4	221	09/17→						
2.0 Td4 4x4	132	09/16→12/18	→	JA000001→; Brake Size: 18" / 19" / 20"		**24.8190-0822.2**	**620822**	
3.0 Scv6 4x4	250	09/16→						
3.0 Td6 4x4	190	09/16→						
3.0 D300 MHEV 4x4	221	12/20→	←	Brake Size: 18"		**24.8190-0819.2**	**620819**	L2= 363
3.0 Sdv6 4x4	225	09/18→						
			→			**24.8190-0822.2**	**620822**	
LAND ROVER - DISCOVERY SPORT (L550) 09/14→								
Guide Bolt, brake caliper								
1.5 P300e Hybrid 4x4	147 - 227	02/20→	→			**11.8171-0008.1**	**990049**	ATE
2.0 4x4	177 - 213	11/14→						
2.0 D	110	08/15→						
2.0 D150 MHEV 4x4	110	05/19→						
2.0 D165	120	07/20→						
2.0 D165 MHEV 4x4	120	07/20→						
2.0 D180 MHEV 4x4	132	05/19→						
2.0 D200 MHEV 4x4	150	07/20→						
2.0 D240 MHEV 4x4	177	05/19→						
2.0 D 4x4	110 - 177	12/14→						
2.0 P200 4x4	147	07/20→						
2.0 P200 FLEX MHEV 4x4	147	09/20→						
2.0 P200 MHEV 4x4	147	05/19→						
2.0 P250 4x4	183	05/19→						
2.0 P250 MHEV 4x4	184	05/19→						
2.0 P290 MHEV 4x4	213	07/20→						
2.0 Si4 FLEX 4x4	177	12/18→						
2.2 D 4x4	110 - 140	09/14→						
Warning Contact, brake pad wear								
1.5 P300e Hybrid 4x4	147 - 227	02/20→	←	→ KH999999; for brake disc diameter [mm]: 349; Brake Size: 18"		**24.8190-0818.2**	**620818**	L2= 483
2.0 4x4	177 - 213	11/14→						
2.0 D	110	08/15→						
2.0 D150 MHEV 4x4	110	05/19→						
2.0 D165	120	07/20→						
2.0 D165 MHEV 4x4	120	07/20→						
2.0 D180 MHEV 4x4	132	05/19→						
2.0 D200 MHEV 4x4	150	07/20→						
2.0 D240 MHEV 4x4	177	05/19→						
2.0 D 4x4	110 - 177	12/14→						
2.0 P200 4x4	147	07/20→						
2.0 P200 FLEX MHEV 4x4	147	09/20→						
2.0 P200 MHEV 4x4	147	05/19→						
2.0 P250 4x4	183	05/19→						
2.0 P250 MHEV 4x4	184	05/19→						

	kW				! #			
LAND ROVER - DISCOVERY SPORT (L550) 09/14→								
Warning Contact, brake pad wear								
2.0 P290 MHEV 4x4 2.0 Si4 FLEX 4x4 2.2 D 4x4	213 177 110 - 140	07/20→ 12/18→ 09/14→	←	→ KH999999; for brake disc diameter [mm]: 349; Brake Size: 18"		**24.8190-0818.2**	**620818**	L2= 483
LAND ROVER - DISCOVERY SPORT VAN (L550) 09/14→								
Guide Bolt, brake caliper								
eD4 E-Capability SD4 4x4 Si4 4x4 TD4 4x4	110 177 177 - 213 110 - 132	08/15→ 06/15→ 01/17→ 12/14→	→			**11.8171-0008.1**	**990049**	ATE
Warning Contact, brake pad wear								
eD4 E-Capability SD4 4x4 Si4 4x4 TD4 4x4	110 177 177 - 213 110 - 132	08/15→ 06/15→ 01/17→ 12/14→	←	→ KH999999; for brake disc diameter [mm]: 349; Brake Size: 18"		**24.8190-0818.2**	**620818**	L2= 483
LAND ROVER - FREELANDER 2 (L359) 10/06→12/15								
Guide Bolt, brake caliper								
2.0 Si4 4x4 2.2 eD4 2.2 SD4 4x4 2.2 TD4 4x4 3.2 4x4	177 110 140 110 - 118 171	10/11→10/14 08/10→10/14 08/10→10/14 10/06→10/14 10/06→10/14			2	**11.8171-0008.1**	**990049**	ATE
LAND ROVER - FREELANDER 2 VAN (L359) 10/06→10/14								
Guide Bolt, brake caliper								
2.2 TD4 4x4	118	10/06→10/14			2	**11.8171-0008.1**	**990049**	ATE
LAND ROVER - RANGE ROVER IV (L405) 08/12→								
Warning Contact, brake pad wear								
2.0 P400e Hybrid 4x4 3.0 SCV6 4x4	221 250	10/17→ 10/13→	← →	Rim Size [in]: 18 Rim Size [in]: 18		**24.8190-0819.2** **24.8190-0822.2**	**620819** **620822**	L2= 363
2.0 P400e Hybrid 4x4 3.0 SDV6 4x4 3.0 TDV6 4x4	297 182 - 183 155 - 190	10/17→ 08/12→ 08/12→	← →	Rim Size [in]: 18 Rim Size [in]: 19 / 20; JA000001→		**24.8190-0819.2** **24.8190-0822.2**	**620819** **620822**	L2= 363
3.0 P400 4x4 D300 4x4 D350 4x4 D350 MHEV 4x4	294 221 258 258	07/20→ 07/20→ 07/20→ 11/20→	← →	Rim Size [in]: 18 not for equipment variant: AUTOBIOG-RAPHY		**24.8190-0819.2** **24.8190-0822.2**	**620819** **620822**	L2= 363
3.0 P400 MHEV 4x4 P360 MHEV 4x4	294 265	05/19→ 12/19→	→	not for equipment variant: AUTOBIOG-RAPHY		**24.8190-0822.2**	**620822**	
3.0 SDV6 4x4	202	10/18→	→			**24.8190-0822.2**	**620822**	
3.0 SDV6 4x4	215	10/12→	→	Rim Size [in]: 19 / 20; JA000001→		**24.8190-0822.2**	**620822**	
D250 MHEV 4x4 D300 MHEV 4x4 D350 MHEV 4x4	183 221 258	07/20→ 07/20→ 07/20→	← →	Rim Size [in]: 18 not for equipment variant: AUTOBIOG-RAPHY	1	**24.8190-0819.2** **24.8190-0822.2**	**620819** **620822**	L2= 363
LAND ROVER - RANGE ROVER EVOQUE (L538) 06/11→12/19								
Warning Contact, brake pad wear								
2.0 4x4 2.0 D 4x4	177 - 213 177	08/17→12/19 08/17→12/19	←			**24.8190-0818.2**	**620818**	L2= 483
LAND ROVER - RANGE ROVER EVOQUE (L551) 12/18→								
Guide Bolt, brake caliper								
1.5 P160 MHEV 1.5 P300e Hybrid 4x4 2.0 D150 2.0 D150 4x4 2.0 D150 MHEV 4x4 2.0 D165 2.0 D165 4x4 2.0 D165 MHEV 4x4 2.0 D180 4x4 2.0 D180 MHEV 4x4	118 147 - 227 110 110 110 120 120 120 132 132	09/20→ 02/20→ 12/18→ 12/18→ 12/18→ 07/20→ 07/20→ 07/20→ 12/18→ 12/18→	→			**11.8171-0008.1**	**990049**	ATE

© 2022 Continental Aftermarket & Services GmbH

	kW				! #			
LAND ROVER - RANGE ROVER EVOQUE (L551) 12/18→								
Guide Bolt, brake caliper								
2.0 D200 4x4 2.0 D200 MHEV 4x4 2.0 D240 MHEV 4x4 2.0 P200 4x4 2.0 P200 FLEX MHEV 4x4 2.0 P200 MHEV 4x4 2.0 P250 4x4 2.0 P250 MHEV 4x4 2.0 P300 4x4 2.0 P300 MHEV 4x4	150 150 177 147 147 147 184 183 221 221	07/20→ 07/20→ 12/18→ 12/18→ 09/20→ 12/18→ 12/18→ 12/18→ 07/20→ 12/18→	➡			**11.8171-0008.1**	**990049**	ATE
LAND ROVER - RANGE ROVER EVOQUE Convertible (L538) 11/15→12/19								
Warning Contact, brake pad wear								
2.0 4x4 2.0 D 4x4	177 177	08/17→12/19 08/17→12/19	⬅			**24.8190-0818.2**	**620818**	L2= 483
LAND ROVER - RANGE ROVER SPORT II (L494) 04/13→								
Warning Contact, brake pad wear								
2.0 GTDI 4x4 2.0 P400e PHEV 4x4 2.0 Si4 4x4	177 297 221	10/15→ 10/17→ 10/17→	⬅ ➡	Rim Size [in]: 18 JA000001→; Rim Size [in]: 19 / 20		**24.8190-0819.2** **24.8190-0822.2**	**620819** **620822**	L2= 363
2.0 P400e PHEV 4x4 2.0 SD4 4x4	221 177	10/17→ 08/16→	⬅ ➡	Rim Size [in]: 18 Rim Size [in]: 18		**24.8190-0819.2** **24.8190-0822.2**	**620819** **620822**	L2= 363
3.0 4x4 3.0 P360 MHEV 4x4 3.0 P400 MHEV 4x4	265 265 294	08/19→ 06/19→ 02/19→	➡			**24.8190-0822.2**	**620822**	
3.0 D250 4x4 3.0 D250 MHEV 4x4 3.0 D300 4x4 3.0 D300 MHEV 4x4 3.0 D350 4x4 3.0 D350 MHEV 4x4	183 183 221 221 258 258	07/20→ 07/20→ 07/20→ 07/20→ 07/20→ 07/20→	⬅ ➡	Rim Size [in]: 18		**24.8190-0819.2** **24.8190-0822.2**	**620819** **620822**	L2= 363
LAND ROVER - RANGE ROVER VELAR (L560) 03/17→								
Guide Bolt, brake caliper								
2.0 D180 TD4 4x4 2.0 D200 MHEV 4x4 2.0 D240 SD4 4x4 2.0 P250 Si4 4x4 2.0 P300 Si4 4x4 2.0 P400 Hybrid 4x4 3.0 D275 SDV6 4x4 3.0 D300 MHEV 4x4 3.0 D300 SDV6 4x4 3.0 P340 SCV6 4x4 3.0 P380 SCV6 4x4 3.0 P400 MHEV 4x4 5.0 SCV8 4x4	132 150 177 184 221 221 - 297 202 221 221 250 280 294 405	03/17→ 07/20→ 03/17→ 03/17→ 03/17→ 07/20→ 04/18→ 07/20→ 03/17→ 04/18→ 03/17→ 07/20→ 01/19→	➡			**11.8171-0008.1**	**990049**	ATE
MASERATI - 228 08/86→06/93								
Guide Bolt, brake caliper								
2.8 2.8 i	182 184	07/87→12/90 12/86→12/90		01/89→	2	**11.8171-0008.1**	**990049**	ATE
MASERATI - BITURBO (69, 78, AF3, AM 332) 06/84→12/94								
Guide Bolt, brake caliper								
430	182	02/88→12/94		01/89→	2	**11.8171-0008.1**	**990049**	ATE
MASERATI - BITURBO Coupe (AM 331) 12/81→06/93								
Guide Bolt, brake caliper								
222 222 E 222 SE	162 182 184	01/89→12/92 01/89→10/89 01/88→12/90			2	**11.8171-0008.1**	**990049**	ATE
MASERATI - BITURBO Spider (AM 333) 07/85→12/94								
Guide Bolt, brake caliper								
2.8	165	01/89→12/94			2	**11.8171-0008.1**	**990049**	ATE
MASERATI - KARIF 04/88→06/00								
Guide Bolt, brake caliper								
2.8	165 - 182	04/88→12/92		01/89→	2	**11.8171-0008.1**	**990049**	ATE

	kW				! #			
MAZDA - 2 (DY) 02/03→06/07								
Spring, brake caliper								
1.2 1.25 1.3 L 1.4 1.4 CD 1.6	55 55 67 59 50 74	02/03→06/07 04/03→06/07 04/03→06/07 02/03→06/07 04/03→06/07 02/03→06/07	←		2	**11.8116-0356.1**	**390586**	ATE
Guide Bolt, brake caliper								
1.2 1.25 1.3 L 1.4 1.4 CD 1.6	55 55 67 59 50 74	02/03→06/07 04/03→06/07 04/03→06/07 02/03→06/07 04/03→06/07 02/03→06/07			2	**11.8171-0008.1**	**990049**	ATE
MAZDA - 3 (BK) 10/03→12/09								
Spring, brake caliper								
1.3	62	10/03→06/09	←	→ 03/06	2	**11.8116-0356.1**	**390586**	ATE
1.6 1.6 DI Turbo 1.6 MZ-CD 2.0 2.0 MZR-CD 2.3 MPS Turbo	77 80 66 110 105 191	10/03→06/09 06/04→06/09 06/06→12/09 10/03→12/09 07/06→06/09 12/06→06/09	←	→ 05/09	2	**11.8116-0356.1**	**390586**	ATE
2.0 2.3 DiSi Turbo MPS 2.3 MZR	104 184 115	10/03→06/06 06/06→06/09 10/03→03/09	←		2	**11.8116-0356.1**	**390586**	ATE
Guide Bolt, brake caliper								
1.3	62	10/03→06/09		→ 03/06	2	**11.8171-0008.1**	**990049**	ATE
1.6 1.6 DI Turbo 1.6 MZ-CD 2.0 2.0 MZR-CD 2.3 MPS Turbo	77 80 66 110 105 191	10/03→06/09 06/04→06/09 06/06→12/09 10/03→12/09 07/06→06/09 12/06→06/09		→ 05/09	2	**11.8171-0008.1**	**990049**	ATE
2.0 2.3 DiSi Turbo MPS 2.3 MZR	104 184 115	10/03→06/06 06/06→06/09 10/03→03/09			2	**11.8171-0008.1**	**990049**	ATE
Brake Pad Set, disc brake								
1.3	62	10/03→06/09	←	→ 03/06		**13.0460-7193.2** **13.0470-7193.2**	**607193** **LD7193**	ATE 23723 18,1 - WE / - WK ATE 23723 18,1 - WE / - WK Ceramic
1.6 1.6 DI Turbo 1.6 MZ-CD 2.0 2.0 MZR-CD	77 80 66 110 105	10/03→06/09 06/04→06/09 06/06→12/09 10/03→12/09 07/06→06/09	←	→ 05/09		**13.0460-7193.2** **13.0470-7193.2**	**607193** **LD7193**	ATE 23723 18,1 - WE / - WK ATE 23723 18,1 - WE / - WK Ceramic
2.0 2.3 MZR	104 115	10/03→06/06 10/03→03/09	←			**13.0460-7193.2** **13.0470-7193.2**	**607193** **LD7193**	ATE 23723 18,1 - WE / - WK ATE 23723 18,1 - WE / - WK Ceramic
MAZDA - 3 (BL) 12/08→09/14								
Spring, brake caliper								
1.6 MZ-CD 2.0 DISI 2.0 MZR DISI 2.2 MZR CD	80 110 111 110 - 136	12/08→05/13 05/09→02/12 12/08→05/13 01/09→10/13	→	06/09→	2	**11.8116-0356.1**	**390586**	ATE
1.6 MZR 2.0 MZR	79 108	01/10→12/13 04/09→09/14	→	→ 11/13	2	**11.8116-0356.1**	**390586**	ATE
1.6 MZR 2.0 MZR 2.5	77 110 122	12/08→09/14 01/09→09/14 03/09→09/14	→	06/09→ 11/13	2	**11.8116-0356.1**	**390586**	ATE
1.6 MZR CD	85	09/10→05/13	→	11/10→	2	**11.8116-0356.1**	**390586**	ATE
2.0	113	09/11→10/13	→		2	**11.8116-0356.1**	**390586**	ATE
Brake Pad Set, disc brake								
1.6 MZ-CD 2.0 DISI 2.0 MZR DISI 2.2 MZR CD	80 110 111 110 - 136	12/08→05/13 05/09→02/12 12/08→05/13 01/09→10/13	←	06/09→		**13.0460-7193.2** **13.0470-7193.2**	**607193** **LD7193**	ATE 23723 18,1 - WE / - WK ATE 23723 18,1 - WE / - WK Ceramic
1.6 MZR 2.0 MZR	79 108	01/10→12/13 04/09→09/14	←	→ 11/13		**13.0460-7193.2**	**607193**	ATE 23723 18,1 - WE / - WK

© 2022 Continental Aftermarket & Services GmbH

	kW				! #			
MAZDA - 3 (BL) 12/08→09/14								
Brake Pad Set, disc brake								
1.6 MZR 2.0 MZR	79 108	01/10→12/13 04/09→09/14	←	→ 11/13		**13.0470-7193.2**	**LD7193**	ATE 23723 18,1 - WE / - WK Ceramic
1.6 MZR 2.0 MZR 2.5	77 110 122	12/08→09/14 01/09→09/14 03/09→09/14	←	06/09→ 11/13		**13.0460-7193.2** **13.0470-7193.2**	**607193** **LD7193**	ATE 23723 18,1 - WE / - WK ATE 23723 18,1 - WE / - WK Ceramic
1.6 MZR CD	85	09/10→05/13	←	11/10→		**13.0460-7193.2** **13.0470-7193.2**	**607193** **LD7193**	ATE 23723 18,1 - WE / - WK ATE 23723 18,1 - WE / - WK Ceramic
2.0	113	09/11→10/13	←			**13.0460-7193.2** **13.0470-7193.2**	**607193** **LD7193**	ATE 23723 18,1 - WE / - WK ATE 23723 18,1 - WE / - WK Ceramic
MAZDA - 3 Saloon (BK) 09/99→12/09								
Spring, brake caliper								
1.6 1.6 DI Turbo 2.0 MZR-CD	77 80 105	02/04→06/09 06/04→06/09 12/06→06/09	←	→ 05/09	2	**11.8116-0356.1**	**390586**	ATE
2.0 2.3	104 - 110 118	10/03→12/09 03/04→03/09	←		2	**11.8116-0356.1**	**390586**	ATE
Guide Bolt, brake caliper								
1.6 1.6 DI Turbo 2.0 MZR-CD	77 80 105	02/04→06/09 06/04→06/09 12/06→06/09		→ 05/09	2	**11.8171-0008.1**	**990049**	ATE
2.0 2.3	104 - 110 118	10/03→12/09 03/04→03/09			2	**11.8171-0008.1**	**990049**	ATE
Brake Pad Set, disc brake								
1.6 1.6 DI Turbo 2.0 MZR-CD	77 80 105	02/04→06/09 06/04→06/09 12/06→06/09	←	→ 05/09		**13.0460-7193.2** **13.0470-7193.2**	**607193** **LD7193**	ATE 23723 18,1 - WE / - WK ATE 23723 18,1 - WE / - WK Ceramic
2.0 2.3	104 - 110 118	10/03→12/09 03/04→03/09	←			**13.0460-7193.2** **13.0470-7193.2**	**607193** **LD7193**	ATE 23723 18,1 - WE / - WK ATE 23723 18,1 - WE / - WK Ceramic
MAZDA - 3 Saloon (BL) 12/08→12/14								
Spring, brake caliper								
1.6 MZR 2.0 MZR 2.2 MZR CD	77 110 110	12/08→09/14 03/09→09/14 01/09→09/14	→	06/09→ 11/13	2	**11.8116-0356.1**	**390586**	ATE
1.6 MZR CD 2.0 MZR DISI	80 111	12/08→05/13 02/09→05/13	→	06/09→	2	**11.8116-0356.1**	**390586**	ATE
1.6 MZR CD	85	09/10→05/13	→	11/10→	2	**11.8116-0356.1**	**390586**	ATE
2.0 2.2 MZR CD	113 136	09/11→09/14 06/09→05/13	→		2	**11.8116-0356.1**	**390586**	ATE
Brake Pad Set, disc brake								
1.6 MZR 2.0 MZR 2.2 MZR CD	77 110 110	12/08→09/14 03/09→09/14 01/09→09/14	←	06/09→ 11/13		**13.0460-7193.2** **13.0470-7193.2**	**607193** **LD7193**	ATE 23723 18,1 - WE / - WK ATE 23723 18,1 - WE / - WK Ceramic
1.6 MZR CD 2.0 MZR DISI	80 111	12/08→05/13 02/09→05/13	←	06/09→		**13.0460-7193.2** **13.0470-7193.2**	**607193** **LD7193**	ATE 23723 18,1 - WE / - WK ATE 23723 18,1 - WE / - WK Ceramic
1.6 MZR CD	85	09/10→05/13	←	11/10→		**13.0460-7193.2** **13.0470-7193.2**	**607193** **LD7193**	ATE 23723 18,1 - WE / - WK ATE 23723 18,1 - WE / - WK Ceramic
2.0 2.2 MZR CD	113 136	09/11→09/14 06/09→05/13	←			**13.0460-7193.2** **13.0470-7193.2**	**607193** **LD7193**	ATE 23723 18,1 - WE / - WK ATE 23723 18,1 - WE / - WK Ceramic
MAZDA - 5 (CR19) 02/05→12/10								
Spring, brake caliper								
1.8 2.0 2.0 CD	85 107 81	02/05→05/10 02/05→05/10 02/05→05/10	←	03/05→ 11/06	2	**11.8116-0356.1**	**390586**	ATE
			←	12/06→	2	**11.8116-0356.1**	**390586**	ATE
2.0 CD 2.3	105 122	02/05→05/10 02/05→09/08	←	06/05→ 11/06	2	**11.8116-0356.1**	**390586**	ATE
			←	12/06→	2	**11.8116-0356.1**	**390586**	ATE

	kW				! #			
MAZDA - 5 (CR19) 02/05→12/10								
Guide Bolt, brake caliper								
1.8 2.0 2.0 CD	85 107 81	02/05→05/10 02/05→05/10 02/05→05/10		03/05→ 11/06	2	**11.8171-0008.1**	**990049**	ATE
				03/05→	2	**11.8171-0008.1**	**990049**	ATE
				12/06→	2	**11.8171-0008.1**	**990049**	ATE
2.0 CD 2.3	105 122	02/05→05/10 02/05→09/08		06/05→ 11/06	2	**11.8171-0008.1**	**990049**	ATE
				12/06→	2	**11.8171-0008.1**	**990049**	ATE
				06/05→	2	**11.8171-0008.1**	**990049**	ATE
Brake Pad Set, disc brake								
1.8 2.0 2.0 CD	85 107 81	02/05→05/10 02/05→05/10 02/05→05/10	←	03/05→		**13.0460-7193.2** **13.0470-7193.2**	**607193** **LD7193**	ATE 23723 18,1 - WE / - WK ATE 23723 18,1 - WE / - WK Ceramic
2.0 CD 2.3	105 122	02/05→05/10 02/05→09/08	←	06/05→		**13.0460-7193.2** **13.0470-7193.2**	**607193** **LD7193**	ATE 23723 18,1 - WE / - WK ATE 23723 18,1 - WE / - WK Ceramic
MAZDA - 5 (CW) 06/10→								
Spring, brake caliper								
1.6 CD 1.8 MZR 2.0	85 85 106 - 110	07/10→ 09/10→ 06/10→			2	**11.8116-0356.1**	**390586**	ATE
Guide Bolt, brake caliper								
1.6 CD 1.8 MZR 2.0	85 85 106 - 110	07/10→ 09/10→ 06/10→			2	**11.8171-0008.1**	**990049**	ATE
Brake Pad Set, disc brake								
1.6 CD 1.8 MZR 2.0	85 85 106 - 110	07/10→ 09/10→ 06/10→	←			**13.0460-7193.2** **13.0470-7193.2**	**607193** **LD7193**	ATE 23723 18,1 - WE / - WK ATE 23723 18,1 - WE / - WK Ceramic
MAZDA - 121 III (JASM, JBSM) 03/96→04/03								
Guide Bolt, brake caliper								
1.25	55	03/96→04/03		→ 01/00; Automatic Transmission	2	**11.8171-0008.1**	**990049**	ATE
			←	Manual Transmission; → 01/00	2	**11.8171-0008.1**	**990049**	ATE
			←	02/00→ 03/03	2	**11.8171-0008.1**	**990049**	ATE
1.3	37 - 44	03/96→04/03	←	02/00→ 03/03	2	**11.8171-0008.1**	**990049**	ATE
1.8 D	44	03/96→04/03	←	→ 01/00	2	**11.8171-0008.1**	**990049**	ATE
MAZDA - BONGO VAN Van (SK_) 06/99→								
Brake Pad Set, disc brake								
1.8	75	08/10→	←			**13.0460-5853.2**	**605853**	SUM 23488 15,4 + WK
MAZDA - B-SERIE (UF) 01/85→12/99								
Wheel Brake Cylinder								
2.5 D 4WD 2.6 12V 4WD	57 90	09/98→06/99 01/90→06/99	→	02/99→	2	**24.3223-1711.3**	**020570**	GG
MAZDA - B-SERIE (UN) 11/98→12/08								
Wheel Brake Cylinder								
2.2 2.5 D 2.5 D 4WD 2.5 TD 4WD	68 61 61 80	11/99→08/02 11/99→12/01 11/99→12/01 06/99→07/06	→		2	**24.3223-1711.3**	**020570**	GG
2.2 4WD 2.5 D 4WD	60 57	02/99→11/06 06/99→11/06	→	→ 10/99	2	**24.3223-1711.3**	**020570**	GG
2.2 8V 4WD 2.6 12V 4WD 2.6 i	68 90 92	06/99→11/06 06/99→11/06 02/99→11/06	→	→ 08/02	2	**24.3223-1711.3**	**020570**	GG
2.5 D	57	06/99→11/06	→	08/02→ 05/04	2	**24.3223-1711.3**	**020570**	GG
2.5 D 2.5 D 4WD	62 62	12/02→11/06 12/02→11/06	→	→ 07/06	2	**24.3223-1711.3**	**020570**	GG

© 2022 Continental Aftermarket & Services GmbH

	kW				! #			
MAZDA - BT-50 II Pickup (B22, B32, UP, UR) 11/11→								
Brake Pad Set, disc brake								
2.2 MZ-CD 4WD	92	12/12→				**13.0460-8014.2**	**608014**	25632 15,5 + WK + Zub
Brake Disc								
2.2 MZ-CD 4WD	92	12/12→				**24.0132-0176.1**	**432176**	Ø 302 Brake Disc Thickness [mm] 32 Minimum thickness [mm] 30 Vented
Wheel Brake Cylinder								
2.2 MZ-CD 4WD	92	12/12→		- ABS	2	**24.3223-1711.3**	**020570**	GG
MAZDA - BT-50 Pickup (CD, UN) 08/06→12/15								
Wheel Brake Cylinder								
2.5 MRZ-CD	105	08/06→06/13			2	**24.3223-1711.3**	**020570**	GG
2.5 MRZ-CD 4x4 3.0 CDVi	105 115	12/06→12/15 12/06→12/15		→ 07/12	2	**24.3223-1711.3**	**020570**	GG
3.0 CDVi 4x4	115	10/06→12/15		12/06→ 07/12	2	**24.3223-1711.3**	**020570**	GG
MAZDA - BT-50 Platform/Chassis (CD, UN) 08/06→								
Wheel Brake Cylinder								
2.5 CDVi 3.0 CDVi 4x4	105 115	12/06→ 12/06→		→ 07/12		**24.3223-1711.3**	**020570**	GG
MERCEDES-BENZ - /8 (W114) 01/68→11/76								
Accessory Kit, parking brake shoes								
230.6	88	01/68→11/76		→ 10/76		**03.0137-9700.2**	**669700**	
250	85 - 96	01/68→08/72				**03.0137-9700.2**	**669700**	
250 2.8	96	06/72→11/76		→ 06/76		**03.0137-9700.2**	**669700**	
280 280 E	118 136	06/72→11/76 06/72→11/76		→ 09/76		**03.0137-9700.2**	**669700**	
MERCEDES-BENZ - /8 (W115) 01/68→01/77								
Accessory Kit, parking brake shoes								
200 200 D	63 - 70 40	01/68→01/77 01/68→01/77		→ 12/76		**03.0137-9700.2**	**669700**	
220	66 - 77	01/68→07/73				**03.0137-9700.2**	**669700**	
220 D 230.4 240 D	44 81 48	01/68→01/77 08/73→12/76 08/73→01/77		→ 11/76		**03.0137-9700.2**	**669700**	
240 D 3.0	59	08/74→11/76		09/74→ 10/76		**03.0137-9700.2**	**669700**	
MERCEDES-BENZ - /8 Coupe (W114) 04/69→02/77								
Accessory Kit, parking brake shoes								
250 C 250 CE	96 110	04/69→06/72 04/69→04/72				**03.0137-9700.2**	**669700**	
250 C 2.8	96	06/72→11/76		→ 06/76		**03.0137-9700.2**	**669700**	
280 C 280 CE	118 136	06/72→02/77 06/72→01/77		→ 07/76		**03.0137-9700.2**	**669700**	
MERCEDES-BENZ - 123 Coupe (C123) 03/77→12/85								
Accessory Kit, parking brake shoes								
230 C 280 C 280 CE	80 115 130	05/77→04/80 03/77→03/80 09/77→08/79				**03.0137-9700.2**	**669700**	
230 CE	100	04/80→12/85		06/80→ 07/85		**03.0137-9700.2**	**669700**	
280 CE	136	03/77→11/85		→ 07/85		**03.0137-9700.2**	**669700**	
MERCEDES-BENZ - 123 Saloon (W123) 01/76→12/85								
Accessory Kit, parking brake shoes								
200 200 D 240 D 250 280 E 300 D 300 Turbo-D	62 - 69 40 48 95 - 103 130 59 92	02/76→08/80 07/76→02/79 02/76→02/79 02/76→07/85 08/76→08/81 02/76→07/80 08/81→07/85				**03.0137-9700.2**	**669700**	

© 2022 Continental Aftermarket & Services GmbH

	kW				! #			
MERCEDES-BENZ - 123 Saloon (W123) 01/76→12/85								
Accessory Kit, parking brake shoes								
200 280 E	74 - 80 136	06/80→11/85 02/76→11/85		→ 09/85		**03.0137-9700.2**	**669700**	
200 D	44	03/79→11/85		→ 03/85		**03.0137-9700.2**	**669700**	
220 D	44 - 49	01/76→03/79		→ 01/79		**03.0137-9700.2**	**669700**	
230	80	02/76→03/81		→ 02/81		**03.0137-9700.2**	**669700**	
230 E	100	04/80→12/85		06/80→ 09/85		**03.0137-9700.2**	**669700**	
240 D 300 D	53 65	03/79→11/85 03/79→11/85		→ 07/85		**03.0137-9700.2**	**669700**	
280	115	02/76→08/81		→ 07/81		**03.0137-9700.2**	**669700**	
MERCEDES-BENZ - 123 T-Model (S123) 09/77→12/86								
Accessory Kit, parking brake shoes								
200 T 240 T D 250 T 300 T D 300 T Turbo-D	74 - 80 53 95 - 103 65 92	11/80→11/85 03/79→12/85 05/78→08/82 03/79→11/85 10/80→11/85				**03.0137-9700.2**	**669700**	
230 T 280 TE 300 T D	80 136 59	09/77→03/80 09/77→11/85 09/77→10/85		04/78→		**03.0137-9700.2**	**669700**	
230 TE	100	04/80→11/85		06/80→		**03.0137-9700.2**	**669700**	
240 T D	48	09/77→02/79		02/78→		**03.0137-9700.2**	**669700**	
MERCEDES-BENZ - CABRIOLET (W111, W112) 09/61→12/71								
Accessory Kit, parking brake shoes								
280 SE 3.5	147	04/68→12/71		08/69→ 06/71		**03.0137-9700.2**	**669700**	
MERCEDES-BENZ - C-CLASS (W202) 03/93→05/00								
Guide Bolt, brake caliper								
C 200 Kompressor C 230 Kompressor C 240 C 250 Turbo-D	132 - 141 142 125 110	10/95→05/00 10/95→05/00 06/97→05/00 10/95→05/00			2	**11.8171-0008.1**	**990049**	ATE
C 280	142 - 145	05/93→05/00		A344661 / F331441→	2	**11.8171-0008.1**	**990049**	ATE
MERCEDES-BENZ - C-CLASS (W204) 01/07→01/15								
Guide Bolt, brake caliper								
C 180 CDI C 200 CDI C 250 CDI 4-matic	88 100 150	04/10→03/14 11/09→03/14 01/11→01/14		for vehicles without sports package / for vehicles without AMG sports package	2	**11.8171-0008.1**	**990049**	ATE
				for vehicles with sports package / for vehicles with AMG Sports Package	2	**11.8171-0008.1**	**990049**	ATE
C 180 CGI C 200 CGI C 300 4-matic	115 135 170	01/07→01/14 01/07→01/14 07/07→01/14		04/09→	2	**11.8171-0008.1**	**990049**	ATE
C 180 Kompressor C 200 C 220 CDI C 220 CDI 4-matic C 230 4-matic C 250 CDI C 250 CGI C 280 4-matic C 300 C 300 4-matic C 300 CDI 4-matic C 320 CDI 4-matic C 350 C 350 4-matic C 350 CDI C 350 CDI 4-matic C 350 CGI	115 137 120 - 125 125 150 150 150 170 170 - 185 185 170 165 225 200 - 225 165 - 195 165 - 170 215	01/08→01/14 05/11→01/14 10/08→01/14 02/13→01/14 07/07→01/14 08/08→01/14 07/09→01/14 07/07→01/14 07/09→01/14 02/11→01/14 01/11→01/14 07/07→01/14 01/11→01/14 07/07→01/14 07/09→01/14 07/09→01/14 09/08→01/14			2	**11.8171-0008.1**	**990049**	ATE
C 180 Kompressor C 200 CDI C 200 Kompressor C 220 CDI	115 100 135 120 - 125	01/07→01/14 01/07→12/09 01/07→01/14 01/07→11/08		03/07→	2	**11.8171-0008.1**	**990049**	ATE

© 2022 Continental Aftermarket & Services GmbH

	kW				! #			
MERCEDES-BENZ - C-CLASS (W204) 01/07→01/15								
Guide Bolt, brake caliper								
C 230 C 280 C 320 CDI C 350	150 170 165 200	01/07→01/14 01/07→01/14 01/07→01/14 01/07→01/14		03/07→	2	**11.8171-0008.1**	**990049**	ATE
MERCEDES-BENZ - C-CLASS (W205) 07/13→								
Guide Bolt, brake caliper								
AMG C 43 4-matic C 180 d C 200 d C 200 EQ Boost C 200 EQ Boost 4-matic C 220 d C 220 d 4-matic C 300 C 300 d C 300 d 4-matic C 450 AMG 4-matic	270 - 287 90 110 - 118 135 135 143 143 183 - 190 180 180 270	04/16→ 05/18→ 05/18→ 04/18→ 04/18→ 05/18→ 05/18→ 05/18→ 06/18→ 06/18→ 04/15→05/18	➡		2	**11.8171-0008.1**	**990049**	ATE
C 160 C 180 C 180 BlueTEC / d C 200 C 200 4-matic C 200 BlueTEC / d C 200 d C 220 BlueTEC / d C 220 d 4-matic C 250 C 250 BlueTEC / d C 250 BlueTEC / d 4-matic C 300 C 300 4-matic C 300 BlueTEC Hybrid / h C 300 de C 300 e C 300 e 4-matic C 300 EQ Boost C 300 EQ Boost 4-matic C 350 e	95 115 85 135 - 150 135 - 150 100 100 120 - 125 125 155 150 150 180 180 - 190 150 143 - 225 155 - 235 155 - 235 190 190 155 - 205	04/15→ 03/14→ 05/14→05/18 12/13→ 04/15→ 05/14→05/18 10/15→05/18 02/14→05/18 04/15→05/18 03/14→05/18 02/14→05/18 02/14→05/18 09/15→08/18 12/13→ 05/14→05/18 05/19→ 07/19→ 07/19→ 05/19→ 05/19→ 02/15→08/18	➡			**11.8171-0008.1**	**990049**	ATE
MERCEDES-BENZ - C-CLASS Convertible (A205) 06/16→								
Guide Bolt, brake caliper								
AMG C 43 4-matic C 200 d C 200 EQ Boost C 200 EQ Boost 4-matic C 220 d C 220 d 4-matic C 300 C 300 d	270 - 287 118 135 135 143 143 190 180	10/16→ 07/18→ 05/18→ 05/18→ 04/18→ 06/18→ 05/18→ 07/18→	➡		2	**11.8171-0008.1**	**990049**	ATE
AMG C 63 AMG C 63 S	350 375	10/16→ 10/16→	➡	for vehicles without ceramic brakes; Brake Caliper Colour: Red / Silver	2	**11.8171-0008.1**	**990049**	ATE
C 180 C 200 C 200 4-matic C 220 d C 220 d 4-matic C 250 C 250 d C 300 C 300 EQ Boost C 300 EQ Boost 4-matic	115 135 - 150 135 120 - 125 125 155 150 180 190 190	06/16→ 06/16→ 06/16→05/18 06/16→05/18 06/16→05/18 06/16→05/18 06/16→05/18 06/16→05/18 05/19→ 05/19→	➡			**11.8171-0008.1**	**990049**	ATE

	kW				! #			
MERCEDES-BENZ - C-CLASS Coupe (C204) 01/11→								
Guide Bolt, brake caliper								
C 180	115	06/11→		for vehicles without sports package / for vehicles without AMG sports package	2	**11.8171-0008.1**	**990049**	ATE
				for vehicles with sports package / for vehicles with AMG Sports Package	2	**11.8171-0008.1**	**990049**	ATE
C 200 CGI C 220 CDI C 250 C 250 CDI C 350 C 350 4-matic	135 120 - 125 150 150 225 225	06/11→ 06/11→ 06/11→ 06/11→ 06/11→ 09/13→			2	**11.8171-0008.1**	**990049**	ATE
MERCEDES-BENZ - C-CLASS Coupe (C205) 10/15→								
Guide Bolt, brake caliper								
AMG C 43 4-matic C 200 d C 200 EQ Boost C 200 EQ Boost 4-matic C 220 d C 220 d 4-matic C 300 C 300 d C 300 d 4-matic	287 118 135 135 143 143 190 180 180	05/18→ 07/18→ 05/18→ 05/18→ 04/18→ 06/18→ 05/18→ 07/18→ 07/18→	➡		2	**11.8171-0008.1**	**990049**	ATE
C 180 C 200 C 200 4-matic C 220 d C 220 d 4-matic C 250 C 250 d C 250 d 4-matic C 300 C 300 4-matic C 300 EQ Boost C 300 EQ Boost 4-matic	115 135 135 120 - 125 125 155 150 150 180 190 190 190	10/15→ 10/15→05/18 04/16→05/18 10/15→05/18 04/16→05/18 10/15→05/18 10/15→05/18 04/16→05/18 10/15→12/18 05/18→ 05/19→ 05/19→	➡			**11.8171-0008.1**	**990049**	ATE
MERCEDES-BENZ - C-CLASS T-Model (S202) 06/96→03/01								
Guide Bolt, brake caliper								
C 200 T C 200 T Kompressor C 230 T Kompressor C 240 T C 250 T Turbo-D C 280 T	100 120 - 141 142 125 110 145	06/96→03/01 11/96→03/01 06/97→09/00 06/97→03/01 06/96→03/01 06/97→03/01			2	**11.8171-0008.1**	**990049**	ATE
MERCEDES-BENZ - C-CLASS T-Model (S204) 08/07→08/14								
Guide Bolt, brake caliper								
C 180 C 180 CDI C 180 CGI C 180 Kompressor C 200 CDI C 250 CDI 4-matic	115 88 115 115 100 150	02/12→08/14 01/11→08/14 11/09→08/14 01/08→08/14 08/10→08/14 04/10→08/14		for vehicles without sports package / for vehicles without AMG sports package	2	**11.8171-0008.1**	**990049**	ATE
				for vehicles with sports package / for vehicles with AMG Sports Package	2	**11.8171-0008.1**	**990049**	ATE
C 180 Kompressor C 200 CDI	115 100	08/07→08/14 08/07→12/09		09/07→; for vehicles without sports package / for vehicles without AMG sports package	2	**11.8171-0008.1**	**990049**	ATE
				09/07→; for vehicles with sports package / for vehicles with AMG Sports Package	2	**11.8171-0008.1**	**990049**	ATE
C 200 CGI C 250 CDI	135 150	08/07→08/14 01/09→08/14		04/09→	2	**11.8171-0008.1**	**990049**	ATE
C 200 Kompressor C 220 CDI C 230 C 280 C 320 CDI C 320 CDI 4-matic C 350 C 350 CDI 4-matic	135 125 150 170 165 165 200 165	08/07→08/14 08/07→11/08 08/07→08/14 08/07→08/14 08/07→08/14 08/07→12/11 08/07→08/14 08/07→12/11		09/07→	2	**11.8171-0008.1**	**990049**	ATE
C 220 CDI C 220 CDI 4-matic C 250 C 250 CGI C 300 C 300 CDI 4-matic C 350 CDI	120 - 125 125 150 150 170 170 165 - 195	12/08→08/14 02/13→08/14 02/08→12/12 07/09→08/14 08/07→08/14 06/11→08/14 08/07→08/14			2	**11.8171-0008.1**	**990049**	ATE

© 2022 Continental Aftermarket & Services GmbH

	kW				! #			
MERCEDES-BENZ - C-CLASS T-Model (S204) 08/07→08/14								
Guide Bolt, brake caliper								
C 350 CDI 4-matic C 350 CGI	170 225	10/09→08/14 06/11→08/14			2	**11.8171-0008.1**	**990049**	ATE
C 220 CDI	120	08/07→11/08		09/07→	2	**11.8171-0008.1**	**990049**	ATE
					2	**11.8171-0008.1**	**990049**	ATE
MERCEDES-BENZ - C-CLASS T-Model (S205) 09/14→								
Guide Bolt, brake caliper								
AMG C 43 4-matic C 160 C 180 C 180 BlueTEC / d C 200 C 200 4-matic C 200 BlueTEC / d C 200 d C 220 BlueTEC / d C 220 d 4-matic C 250 C 250 BlueTEC / d C 250 BlueTEC / d 4-matic C 300 C 300 4-matic C 300 BlueTEC Hybrid / h C 300 de C 300 e C 300 EQ Boost C 300 EQ Boost 4-matic C 350 e	270 95 115 85 135 135 100 100 120 - 125 125 155 150 150 180 190 150 143 - 225 155 - 235 190 190 155 - 205	04/16→05/18 04/15→ 09/14→ 09/14→05/18 09/14→05/18 04/15→05/18 09/14→05/18 10/15→05/18 09/14→05/18 04/15→05/18 09/14→05/18 09/14→05/18 10/14→05/18 09/15→05/18 05/18→ 10/14→05/18 05/19→ 07/19→ 05/19→ 05/19→ 02/15→05/18				**11.8171-0008.1**	**990049**	ATE
AMG C 43 4-matic C 180 d C 200 d C 200 EQ Boost C 200 EQ Boost 4-matic C 220 d C 220 d 4-matic C 300 C 300 d C 300 d 4-matic	287 90 110 - 118 135 135 143 143 190 180 180	05/18→ 05/18→ 05/18→ 04/18→ 04/18→ 04/18→ 05/18→ 05/18→ 06/18→ 06/18→			2	**11.8171-0008.1**	**990049**	ATE
MERCEDES-BENZ - CITAN Box Body/MPV (W415) 11/12→08/21								
Wheel Brake Cylinder								
108 CDI 109 CDI 111 CDI 112	55 66 81 84	11/12→08/21 11/12→08/21 06/13→08/21 06/13→08/21		Rim Size [in]: 14		**24.3222-1729.3**	**020526**	ALU
108 CDI 109 CDI 111 CDI	59 70 85	05/19→08/21 05/19→08/21 05/19→08/21				**24.3222-1729.3**	**020526**	ALU
Accessory Kit, brake shoes								
108 CDI 109 CDI 111 CDI 112	55 - 59 66 - 70 81 - 85 84	11/12→08/21 11/12→08/21 06/13→08/21 06/13→08/21				**03.0137-9228.2**	**669228**	BDX
Brake Shoe Set								
108 CDI 109 CDI 111 CDI 112	55 - 59 66 - 70 81 - 85 84	11/12→08/21 11/12→08/21 06/13→08/21 06/13→08/21		Rim Size [in]: 14		**03.0137-0496.2** **03.0520-7222.3**	**650496** **697222**	BDX Ø 228 Width [mm] 42 + HEB Ø 228 Width [mm] 42 + RZ / + Zub TopKit
MERCEDES-BENZ - CITAN Box Body/MPV (W420) 09/21→								
Guide Bolt, brake caliper								
1.3 110 1.3 113 1.5 108 CDI 1.5 110 CDI	75 96 55 70	09/21→ 09/21→ 09/21→ 09/21→				**11.8171-0008.1**	**990049**	ATE

	kW				! #			
MERCEDES-BENZ - CITAN Box Body/MPV (W420) 09/21→								
Guide Bolt, brake caliper								
1.5 112 CDI	85	09/21→	←			**11.8171-0008.1**	**990049**	ATE
MERCEDES-BENZ - CITAN Mixto (Double Cabin) (W415) 11/12→08/21								
Wheel Brake Cylinder								
109 CDI 111 CDI	66 81	11/12→08/21 06/13→08/21	→	Rim Size [in]: 14		**24.3222-1729.3**	**020526**	ALU
Accessory Kit, brake shoes								
109 CDI 111 CDI	66 81	11/12→08/21 06/13→08/21	→			**03.0137-9228.2**	**669228**	BDX
Brake Shoe Set								
109 CDI 111 CDI	66 81	11/12→08/21 06/13→08/21	→	Rim Size [in]: 14		**03.0137-0496.2** **03.0520-7222.3**	**650496** **697222**	BDX Ø 228 Width [mm] 42 + HEB Ø 228 Width [mm] 42 + RZ / + Zub TopKit
MERCEDES-BENZ - CITAN MPV (W415) 11/12→08/21								
Wheel Brake Cylinder								
108 CDI 109 CDI 111 CDI 112	55 66 81 84	11/12→08/21 11/12→08/21 06/13→08/21 06/13→08/21	→	Rim Size [in]: 14	2	**24.3222-1729.3**	**020526**	ALU
108 CDI 109 CDI 111 CDI	59 70 85	02/19→08/21 02/19→08/21 02/19→08/21	→		2	**24.3222-1729.3**	**020526**	ALU
Accessory Kit, brake shoes								
108 CDI 109 CDI 111 CDI 112	55 - 59 66 - 70 81 - 85 84	11/12→08/21 11/12→08/21 06/13→08/21 06/13→08/21	→			**03.0137-9228.2**	**669228**	BDX
Brake Shoe Set								
108 CDI 109 CDI 111 CDI 112	55 - 59 66 - 70 81 - 85 84	11/12→08/21 11/12→08/21 06/13→08/21 06/13→08/21	→	Rim Size [in]: 14		**03.0137-0496.2** **03.0520-7222.3**	**650496** **697222**	BDX Ø 228 Width [mm] 42 + HEB Ø 228 Width [mm] 42 + RZ / + Zub TopKit
MERCEDES-BENZ - CITAN Tourer (W420) 09/21→								
Guide Bolt, brake caliper								
108 CDI 110 110 CDI 113	55 75 70 96	09/21→ 09/21→ 09/21→ 09/21→	←			**11.8171-0008.1**	**990049**	ATE
MERCEDES-BENZ - CLK (C208) 06/97→12/03								
Guide Bolt, brake caliper								
200 200 Kompressor 230 Kompressor 320 430	100 120 - 141 142 - 145 160 205	06/97→06/02 06/97→06/02 06/97→06/02 06/97→06/02 07/98→06/02	←		2	**11.8171-0008.1**	**990049**	ATE
MERCEDES-BENZ - CLK Convertible (A208) 03/98→03/02								
Guide Bolt, brake caliper								
200 200 Kompressor 230 Kompressor 320	100 141 142 160	03/98→03/02 03/98→06/00 03/98→06/00 03/98→03/02		06/98→	2	**11.8171-0008.1**	**990049**	ATE
200 Kompressor 230 Kompressor	120 145	06/00→03/02 06/00→03/02			2	**11.8171-0008.1**	**990049**	ATE
430	205	09/98→03/02		06/99→	2	**11.8171-0008.1**	**990049**	ATE
MERCEDES-BENZ - CLS (C218) 01/11→12/17								
Guide Bolt, brake caliper								
CLS 350	225	01/11→08/14			2	**11.8171-0008.1**	**990049**	ATE

© 2022 Continental Aftermarket & Services GmbH

	kW				! #			
MERCEDES-BENZ - CLS (C218) 01/11→12/17								
Guide Bolt, brake caliper								
CLS 350 BlueTEC / d	185 - 190	02/13→12/17			2	**11.8171-0008.1**	**990049**	ATE
CLS 350 BlueTEC / d 4-matic	185	02/13→12/17						
CLS 350 CDI / d	195	01/11→08/14						
CLS 350 CDI / d 4-matic	195	09/11→08/14						
CLS 350 d 4-matic	190	04/15→12/17						
CLS 400	245	05/14→12/17						
CLS 400 4-matic	245	05/14→12/17						
CLS 500	300	02/11→12/17						
CLS 500 4-matic	300	09/11→12/17						
MERCEDES-BENZ - CLS (C219) 10/04→02/11								
Guide Bolt, brake caliper								
CLS 350	200 - 215	10/04→12/10	←	→ 10/10	2	**11.8171-0008.1**	**990049**	ATE
CLS 500	225	10/04→12/10						
CLS 500	285	04/06→12/10		→ 10/10	2	**11.8171-0008.1**	**990049**	ATE
MERCEDES-BENZ - CLS Shooting Brake (X218) 10/12→12/17								
Guide Bolt, brake caliper								
CLS 220 BlueTEC / d	120 - 130	05/14→12/17			2	**11.8171-0008.1**	**990049**	ATE
CLS 250 BlueTEC / d 4-matic	150	05/14→12/17						
CLS 250 CDI / BlueTEC / d	150	10/12→12/17						
CLS 350	225	10/12→08/14						
CLS 350 BlueTEC / d	185 - 190	05/14→12/17						
CLS 350 BlueTEC / d 4-matic	185	05/14→12/17						
CLS 350 CDI / d	195	10/12→08/14						
CLS 350 CDI / d 4-matic	195	10/12→08/14						
CLS 350 d 4-matic	190	04/15→12/17						
CLS 400	245	05/14→12/17						
CLS 400 4-matic	245	05/14→12/17						
CLS 500	300	10/12→12/17						
CLS 500 4-matic	300	10/12→12/17						
MERCEDES-BENZ - COUPE (W111, W112) 01/61→12/71								
Accessory Kit, parking brake shoes								
220 SEB	88	01/61→12/65		→ 10/65		**03.0137-9700.2**	**669700**	
250 SE	110	01/65→12/67		08/65→		**03.0137-9700.2**	**669700**	
280 SE	118	01/67→12/71		11/67→ 05/71		**03.0137-9700.2**	**669700**	
280 SE 3.5	147	01/69→12/71		08/69→ 06/71		**03.0137-9700.2**	**669700**	
MERCEDES-BENZ - E-CLASS (W210) 06/95→08/03								
Guide Bolt, brake caliper								
E 200	100	06/95→08/00	←		2	**11.8171-0008.1**	**990049**	ATE
E 200 CDI	85	07/99→03/02						
E 200 Kompressor	120	08/00→03/02						
E 220 CDI	100 - 105	07/99→03/02						
E 230	110	06/95→06/97						
E 240	125	08/00→03/02						
E 270 CDI	120 - 125	07/99→03/02						
E 280	142 - 150	01/96→03/02						
E 280 4-matic	150	12/96→03/02						
E 290 Turbo-D	95	03/96→07/99						
E 300 D	100	06/95→06/97						
E 300 Turbo-D	130	12/96→07/99						
E 320	162 - 165	06/95→03/02						
E 320 4-matic	165	06/97→03/02						
E 320 CDI	145	07/99→03/02						
E 200 CDI	75	06/98→03/02	←	07/98→	2	**11.8171-0008.1**	**990049**	ATE
E 220 CDI	92	06/98→07/99						
E 200 D	65	01/96→03/02	←	10/96→	2	**11.8171-0008.1**	**990049**	ATE
E 200 Kompressor	137	06/97→03/02	←	09/97→	2	**11.8171-0008.1**	**990049**	ATE
E 240	125	06/97→08/00						
E 250 Turbo-D	110	06/97→07/99						
E 220 D	55 - 70	06/95→03/02	←	→ 06/98	2	**11.8171-0008.1**	**990049**	ATE
E 250 D	83	06/95→07/99	←	for right-hand drive vehicles	2	**11.8171-0008.1**	**990049**	ATE

	kW				! #			
MERCEDES-BENZ - E-CLASS (W210) 06/95→08/03								
Guide Bolt, brake caliper								
E 250 D	83	06/95→07/99	←		2	**11.8171-0008.1**	**990049**	ATE
MERCEDES-BENZ - E-CLASS (W211) 03/02→03/09								
Guide Bolt, brake caliper								
E 240 4-matic E 320 4-matic E 500	130 165 285	03/03→12/08 03/03→12/08 04/06→12/08			2	**11.8171-0008.1**	**990049**	ATE
E 280 4-matic E 280 CDI 4-matic E 320 CDI 4-matic E 350 4-matic E 420 CDI	170 140 165 200 231	01/06→12/08 03/05→12/08 03/05→12/08 03/05→12/08 01/06→12/08		for vehicles without sports package / for vehicles without AMG sports package	2	**11.8171-0008.1**	**990049**	ATE
MERCEDES-BENZ - E-CLASS (W212) 01/09→12/16								
Guide Bolt, brake caliper								
E 180 E 200 E 200 CGI E 200 NGT E 220 BlueTEC E 220 BlueTEC 4-matic E 250 E 250 CDI / BlueTEC 4-matic E 250 CGI E 300 E 300 4-matic E 350 E 350 4-matic E 350 BlueTEC E 350 BlueTEC 4-matic E 350 CDI E 350 CDI 4-matic E 400 E 400 4-matic E 500 E 500 4-matic	115 135 135 115 - 120 130 125 155 150 150 185 185 225 225 185 - 190 185 - 190 157 - 195 170 - 195 245 245 300 300	08/13→12/15 01/13→12/16 08/09→12/15 03/11→12/15 05/14→12/15 01/15→12/15 01/13→12/16 01/11→12/15 01/09→12/15 07/11→12/15 07/11→12/15 09/11→12/15 09/11→12/15 01/13→12/15 01/13→12/15 09/10→12/15 09/09→12/15 01/13→12/16 01/13→12/16 09/11→12/15 09/11→12/15	→		2	**11.8171-0008.1**	**990049**	ATE
E 200 CDI / BlueTEC E 300 E 350 E 350 4-matic E 350 BlueTEC E 350 CDI E 350 CGI E 500 E 500 4-matic	100 170 200 200 155 170 215 285 285	01/09→12/15 01/09→12/13 01/09→12/13 01/09→08/11 01/09→12/15 01/09→12/15 01/09→08/11 01/09→12/11 01/09→12/11	→	03/09→	2	**11.8171-0008.1**	**990049**	ATE
E 220 CDI E 220 CDI / BlueTEC	120 125	01/09→12/15 01/09→12/16	→ →	03/09→ A 007599→	2 2	**11.8171-0008.1** **11.8171-0008.1**	**990049** **990049**	ATE ATE
E 250	150	05/09→12/11	→			**11.8171-0008.1**	**990049**	ATE
E 250 CDI / BlueTEC	150	01/09→12/16	→	03/09→; → A 007598	2	**11.8171-0008.1**	**990049**	ATE
E 300 CDI / BlueTEC	170	03/11→12/15	→	04/11→	2	**11.8171-0008.1**	**990049**	ATE
E 300 Hybrid / BlueTEC Hybrid	150	12/11→12/16	→	06/12→	2	**11.8171-0008.1**	**990049**	ATE
MERCEDES-BENZ - E-CLASS Convertible (A207) 01/10→12/16								
Guide Bolt, brake caliper								
E 300 E 320 E 350 E 350 BlueTEC/ d E 350 BlueTEC E 350 CDI E 350 CGI E 400 E 500	185 200 200 - 225 190 185 195 215 245 300	04/11→12/16 07/14→12/16 03/10→12/14 05/14→12/16 06/13→12/16 04/11→12/13 01/10→12/14 06/13→12/16 09/11→12/16			2	**11.8171-0008.1**	**990049**	ATE
E 350 CDI E 500	170 285	01/10→12/11 01/10→12/11		03/10→	2	**11.8171-0008.1**	**990049**	ATE
MERCEDES-BENZ - E-CLASS Coupe (C207) 01/09→12/16								
Guide Bolt, brake caliper								
E 300	185	04/11→06/16			2	**11.8171-0008.1**	**990049**	ATE

© 2022 Continental Aftermarket & Services GmbH

	kW				! #			
MERCEDES-BENZ - E-CLASS Coupe (C207) 01/09→12/16								
Guide Bolt, brake caliper								
E 320 E 350 E 350 4-matic E 350 BlueTEC / d E 350 BlueTEC E 350 CDI E 400 E 500	200 200 - 225 225 190 185 195 245 300	07/14→12/16 01/10→12/14 02/13→12/16 05/14→12/16 06/13→12/16 06/11→06/13 06/13→12/16 09/11→12/16			2	**11.8171-0008.1**	**990049**	ATE
E 350 CDI E 350 CGI E 500	170 215 285	01/09→06/11 01/09→12/11 01/09→12/16		05/09→	2	**11.8171-0008.1**	**990049**	ATE
MERCEDES-BENZ - E-CLASS T-Model (S210) 06/96→03/03								
Guide Bolt, brake caliper								
E 200 T E 200 T Kompressor E 230 T E 240 T E 270 T CDI E 280 T 4-matic E 300 T Turbo-D E 320 T E 320 T CDI	100 120 110 125 120 - 125 150 130 165 145	06/96→08/00 08/00→03/03 06/96→06/97 08/00→03/03 07/99→03/03 12/96→03/03 12/96→07/99 12/96→03/03 07/99→03/03	←		2	**11.8171-0008.1**	**990049**	ATE
E 200 T Kompressor E 240 T E 250 T Turbo-D	137 125 110	06/97→03/03 06/97→03/03 06/97→07/99	←	09/97→	2	**11.8171-0008.1**	**990049**	ATE
E 220 T CDI E 290 T Turbo-D	100 - 105 95	05/99→03/03 06/96→07/99	← ←	Wheelbase [mm]: 2,833 Wheelbase [mm]: 3,570	2 2	**11.8171-0008.1** **11.8171-0008.1**	**990049** **990049**	ATE ATE
E 220 T CDI	92	06/98→07/99	← ←	07/98→; Wheelbase [mm]: 2,833 07/98→; Wheelbase [mm]: 3,570	2 2	**11.8171-0008.1** **11.8171-0008.1**	**990049** **990049**	ATE ATE
E 250 T D	83	06/96→07/99	← ← ←	Wheelbase [mm]: 2,833 Wheelbase [mm]: 3,570 for right-hand drive vehicles; Wheelbase [mm]: 2,833	2 2 2	**11.8171-0008.1** **11.8171-0008.1** **11.8171-0008.1**	**990049** **990049** **990049**	ATE ATE ATE
E 280 T	150	12/96→03/03	←	Wheelbase [mm]: 3,570	2	**11.8171-0008.1**	**990049**	ATE
E 320 T 4-matic	165	12/96→03/03	←	06/97→	2	**11.8171-0008.1**	**990049**	ATE
MERCEDES-BENZ - E-CLASS T-Model (S211) 02/03→07/09								
Guide Bolt, brake caliper								
E 240 T 4-matic E 320 T 4-matic E 500 T	130 165 285	07/03→07/09 07/03→07/09 04/06→07/09			2	**11.8171-0008.1**	**990049**	ATE
E 280 T 4-matic E 280 T CDI 4-matic E 320 T CDI 4-matic	170 140 165	03/05→07/09 03/05→07/09 03/05→07/09		05/05→; for vehicles without sports package / for vehicles without AMG sports package	2	**11.8171-0008.1**	**990049**	ATE
E 350 T 4-matic	200	03/05→07/09		for vehicles without sports package / for vehicles without AMG sports package	2	**11.8171-0008.1**	**990049**	ATE
MERCEDES-BENZ - E-CLASS T-Model (S212) 08/09→12/16								
Guide Bolt, brake caliper								
E 300 E 300 4-matic E 300 CDI / BlueTEC E 350 E 350 4-matic E 350 BlueTEC E 350 BlueTEC 4-matic E 350 CDI E 350 CDI 4-matic E 350 CGI E 400 E 400 4-matic E 500 E 500 4-matic	170 - 185 185 170 225 200 - 225 155 - 190 190 170 - 195 170 - 195 215 245 245 285 - 300 300	11/09→12/16 07/11→12/16 11/09→12/16 09/11→12/14 11/09→12/16 11/09→12/16 07/14→12/16 11/09→12/13 11/09→12/13 11/09→12/11 01/13→12/16 01/13→12/16 11/09→12/16 09/11→12/16	→		2	**11.8171-0008.1**	**990049**	ATE
E 300 Hybrid / BlueTEC Hybrid	150	12/11→12/16	→	06/12→	2	**11.8171-0008.1**	**990049**	ATE
E 350	200	08/09→12/11	→	11/09→	2	**11.8171-0008.1**	**990049**	ATE

	kW				! #			
MERCEDES-BENZ - E-CLASS T-Model (S212) 08/09→12/16								
Guide Bolt, brake caliper								
E 350 BlueTEC E 350 BlueTEC 4-matic	185 185	11/12→12/16 11/12→12/16	➡	01/13→	2	**11.8171-0008.1**	**990049**	ATE
MERCEDES-BENZ - eSPRINTER Van (B910) 02/20→								
Accessory Kit, parking brake shoes								
Electric	85	02/20→	➡	- eFSB		**03.0137-9700.2**	**669700**	
MERCEDES-BENZ - G-CLASS (W461) 09/89→								
Accessory Kit, parking brake shoes								
G 270 CDI G 280 CDI	115 135	01/03→ 04/09→				**03.0137-9700.2**	**669700**	
MERCEDES-BENZ - G-CLASS (W463) 09/89→								
Accessory Kit, parking brake shoes								
G 320 CDI G 350 CDI G 350 d G 400 CDI G 500 G 55 AMG	165 165 180 184 218 - 285 260 - 373	09/06→ 06/09→12/11 06/15→ 12/00→07/06 04/98→ 04/99→				**03.0137-9700.2**	**669700**	
G 65 AMG	450	05/12→		06/12→		**03.0137-9700.2**	**669700**	
MERCEDES-BENZ - G-CLASS Cabrio (W463) 09/89→								
Accessory Kit, parking brake shoes								
G 300 TD G 350 CDI G 400 CDI G 500	130 165 184 218 - 285	09/96→07/00 06/09→12/11 12/00→ 04/98→				**03.0137-9700.2**	**669700**	
MERCEDES-BENZ - GLC (X253) 06/15→								
Guide Bolt, brake caliper								
200 d 200 d 4-matic 200 EQ Boost 200 EQ Boost 4-matic 220 d 220 d 4-matic 250 4-matic 250 CNG 4-matic 250 d 4-matic 250 Flexfuel 4-matic 300 300 4-matic 300 d 4-matic 300 de 4-matic 300 e 4-matic 300 EQ Boost 4-matic 350 d 4-matic 350 e 4-matic 400 d 4-matic AMG 43 4-matic F-CELL 4-matic	120 120 145 145 143 120 - 143 155 155 150 155 180 180 180 143 - 225 155 - 235 190 190 155 - 235 243 270 - 287 80 - 155	04/19→ 04/19→ 04/19→ 04/19→ 04/19→ 06/15→ 06/15→04/19 06/15→04/19 06/15→04/19 06/15→04/19 01/16→04/19 07/15→04/19 04/19→ 05/20→ 11/19→ 04/19→ 10/16→04/19 01/16→04/19 08/19→ 04/16→ 04/20→	➡			**11.8171-0008.1**	**990049**	ATE
MERCEDES-BENZ - GLC Coupe (C253) 06/16→								
Guide Bolt, brake caliper								
200 d 200 d 4-matic 200 EQ Boost 200 EQ Boost 4-matic 220 d 4-matic 250 4-matic 250 d 4-matic 260 4-matic 300 4-matic 300 d 4-matic 300 de 4-matic	120 120 145 145 120 - 143 155 150 145 180 - 190 180 143 - 225	04/19→ 04/19→ 04/19→ 04/19→ 06/16→ 06/16→04/19 06/16→04/19 11/19→ 10/16→ 04/19→ 05/20→	➡			**11.8171-0008.1**	**990049**	ATE

© 2022 Continental Aftermarket & Services GmbH

	kW				! #			
MERCEDES-BENZ - GLC Coupe (C253) 06/16→								
Guide Bolt, brake caliper								
300 e 4-matic	155 - 235	11/19→	➡			**11.8171-0008.1**	**990049**	ATE
300 EQ Boost 4-matic	190	04/19→						
350 d 4-matic	190	10/16→04/19						
350 e 4-matic	155 - 235	10/16→04/19						
400 d 4-matic	243	08/19→						
AMG 43 4-matic	270 - 287	10/16→						
MERCEDES-BENZ - GL-CLASS (X164) 09/06→12/12								
Guide Bolt, brake caliper								
GL 320 CDI / 350 BlueTEC 4-matic	155	12/09→08/12	➡	→ 06/12	2	**11.8171-0008.1**	**990049**	ATE
GL 350 CDI 4-matic	165 - 195	05/09→08/12						
GL 450 4-matic	250	09/06→08/12						
GL 450 CDI 4-matic	225	05/09→08/12						
GL 500 4-matic	285	09/06→12/12						
GL 320 CDI 4-matic	160 - 165	09/06→12/09	➡		2	**11.8171-0008.1**	**990049**	ATE
GL 420 CDI 4-matic	225	09/06→05/09						
MERCEDES-BENZ - HECKFLOSSE (W111, W112) 08/59→01/68								
Accessory Kit, parking brake shoes								
220 B	70	08/59→08/65				**03.0137-9700.2**	**669700**	
230 S	88	07/65→01/68						
220 SB	81	08/59→08/65		→ 07/65		**03.0137-9700.2**	**669700**	
220 SEB	88	08/59→08/65				**03.0137-9700.2**	**669700**	
				09/60→		**03.0137-9700.2**	**669700**	
MERCEDES-BENZ - M-CLASS (W164) 02/05→12/12								
Guide Bolt, brake caliper								
ML 280 CDI 4-matic	140	07/05→07/09	➡		2	**11.8171-0008.1**	**990049**	ATE
ML 320 CDI 4-matic	155 - 165	07/05→07/11						
ML 350 CDI 4-matic	157	09/09→12/10						
ML 300 4-matic	170	03/10→12/11	➡	→ 05/11	2	**11.8171-0008.1**	**990049**	ATE
ML 300 CDI 4-matic	140 - 150	07/09→12/11						
ML 350 4-matic	200	02/05→12/11						
ML 350 CDI 4-matic	155 - 170	07/09→12/11						
ML 450 CDI 4-matic	225	09/09→12/11						
ML 500 4-matic	225 - 285	07/05→12/11						
ML 420 CDI 4-matic	225	02/06→09/09	➡	04/06→	2	**11.8171-0008.1**	**990049**	ATE
MERCEDES-BENZ - PAGODE (W113) 01/63→12/71								
Accessory Kit, parking brake shoes								
250 SL	110	01/66→01/68		11/66→		**03.0137-9700.2**	**669700**	
280 SL	125	01/68→03/71				**03.0137-9700.2**	**669700**	
MERCEDES-BENZ - R-CLASS (W251, V251) 08/05→10/17								
Guide Bolt, brake caliper								
R 280	170	01/07→12/14			2	**11.8171-0008.1**	**990049**	ATE
R 280 4-matic	170	05/07→12/11						
R 280 CDI	140	05/06→12/12						
R 280 CDI 4-matic	140	05/06→12/12						
R 300	170	07/09→12/14						
R 300 4-matic	170	07/09→12/11						
R 300 CDI	140	07/09→12/12						
R 300 CDI 4-matic	140	07/09→12/12						
R 320 CDI 4-matic	155 - 165	01/06→12/12						
R 350	200	01/07→12/12						
R 350 4-matic	200	08/05→12/12						
R 350 CDI 4-matic	165 - 195	07/09→12/14						
R 350 CGI 4-matic	225	10/11→12/14						
R 500 4-matic	225 - 285	08/05→12/14						
R 350 CDI 4-matic	155	01/06→12/14		05/09→	2	**11.8171-0008.1**	**990049**	ATE

	kW				! #			
MERCEDES-BENZ - S-CLASS (W116) 08/72→07/80								
Accessory Kit, parking brake shoes								
280 S	115 - 118	08/72→07/80		09/72→		**03.0137-9700.2**	**669700**	
280 SE	130 - 136	08/72→07/80				**03.0137-9700.2**	**669700**	
SEL	130 - 136	08/72→07/80		01/74→ 04/80		**03.0137-9700.2**	**669700**	
SEL	143 - 151	03/76→03/80		→ 01/80		**03.0137-9700.2**	**669700**	
350 SE	143 - 151	03/76→03/80				**03.0137-9700.2**	**669700**	
SEL	147	08/72→02/76		09/72→		**03.0137-9700.2**	**669700**	
350 SE	147	08/72→02/76		11/73→		**03.0137-9700.2**	**669700**	
450 SE	143	08/72→12/76		11/72→		**03.0137-9700.2**	**669700**	
SEL	165	01/73→04/80				**03.0137-9700.2**	**669700**	
450 SE	165	01/73→04/80		03/73→		**03.0137-9700.2**	**669700**	
SEL 450 SE 450 SEL 6.9	160 160 210	12/75→04/80 12/75→04/80 07/75→03/80				**03.0137-9700.2**	**669700**	
MERCEDES-BENZ - S-CLASS (W126) 10/79→06/91								
Accessory Kit, parking brake shoes								
260 SE	118 - 122	09/85→06/91		→ 03/91		**03.0137-9700.2**	**669700**	
SEL	132 - 220	09/85→06/91						
300 SE	132	01/86→06/91						
420 SE	150 - 165	10/85→06/91						
500 SE	164 - 195	09/85→06/91						
SEL Cat	185	06/89→06/91						
560 SE	220	10/85→06/91						
280 S	115	12/79→07/85		01/80→		**03.0137-9700.2**	**669700**	
280 SE	136	10/79→07/85		01/80→		**03.0137-9700.2**	**669700**	
SEL	136 - 177	10/79→08/85		05/80→		**03.0137-9700.2**	**669700**	
500 SE	170 - 177	12/79→08/85						
3.8	160	08/80→08/84				**03.0137-9700.2**	**669700**	
SEL	138 - 200	09/80→12/89						
300 SE	138	09/85→12/89						
380 SE	160	09/80→10/81						
420 SE	160 - 170	10/85→12/87						
560 SE	200	10/85→12/87						
380 SE	150	10/81→08/85		→ 07/85		**03.0137-9700.2**	**669700**	
SEL	150	10/81→08/85				**03.0137-9700.2**	**669700**	
560 SE	178 - 205	10/85→06/91		→ 03/91		**03.0137-9700.2**	**669700**	
SEL	178 - 205	10/85→06/91		07/88→ 03/91		**03.0137-9700.2**	**669700**	
MERCEDES-BENZ - S-CLASS (W220) 09/98→08/05								
Guide Bolt, brake caliper								
S 350 4-matic	180	06/03→08/05			2	**11.8171-0008.1**	**990049**	ATE
MERCEDES-BENZ - S-CLASS (W221) 09/05→12/13								
Guide Bolt, brake caliper								
S 250 CDI S 350 BlueTec S 350 BlueTEC 4-matic S 350 CGI S 350 CGI 4-matic S 500 CGI S 500 CGI 4-matic S 550	150 190 190 225 225 320 320 320	01/11→12/13 04/11→12/13 04/11→12/13 04/11→12/13 04/11→12/13 04/11→12/13 03/11→12/13 09/11→12/13	➡	→ 05/13	2	**11.8171-0008.1**	**990049**	ATE
S 280 S 300	170 170	08/06→12/13 08/06→12/13	➡	A 265576→; → 05/13	2	**11.8171-0008.1**	**990049**	ATE
S 320 CDI 4-matic S 350 4-matic S 350 CDI	173 200 155 - 173	10/06→12/13 02/08→12/13 06/09→12/13	➡	→ A 265575	2	**11.8171-0008.1**	**990049**	ATE
S 320 CDI S 350	155 200	10/05→12/13 10/05→12/13	➡	A 265576→; → 05/13	2	**11.8171-0008.1**	**990049**	ATE
			➡	12/05→; → A 265575	2	**11.8171-0008.1**	**990049**	ATE
S 320 CDI	173	12/05→06/09	➡	A 265576→	2	**11.8171-0008.1**	**990049**	ATE

© 2022 Continental Aftermarket & Services GmbH

	kW				! #			
MERCEDES-BENZ - S-CLASS (W221) 09/05→12/13								
Guide Bolt, brake caliper								
S 320 CDI 4-matic S 350 CDI 4-matic S 400 Hybrid	155 155 - 173 220	10/05→12/13 01/09→07/13 09/09→12/13		→ A 265575	2	**11.8171-0008.1**	**990049**	ATE
S 400 Hybrid	205	01/09→12/13		A 265576→; → 05/13	2	**11.8171-0008.1**	**990049**	ATE
				06/09→; → A 265575	2	**11.8171-0008.1**	**990049**	ATE
S 420 CDI S 450 CDI	235 235	10/06→12/09 01/09→12/13			2	**11.8171-0008.1**	**990049**	ATE
S 450 S 450 4-matic S 500 4-matic	250 250 285	12/05→12/13 12/05→12/13 10/05→12/13		04/06→ 05/13	2	**11.8171-0008.1**	**990049**	ATE
S 500	285	10/05→12/13		12/05→ 05/13	2	**11.8171-0008.1**	**990049**	ATE
MERCEDES-BENZ - S-CLASS Coupe (C126) 08/80→06/91								
Accessory Kit, parking brake shoes								
380 SEC 420 SEC 500 SEC 500 SEC Cat 560 SEC	150 150 - 165 164 - 195 185 178 - 220	10/81→07/85 10/85→06/91 10/81→06/91 06/89→06/91 10/85→06/91				**03.0137-9700.2**	**669700**	
500 SEC	177	08/80→08/85		06/81→		**03.0137-9700.2**	**669700**	
MERCEDES-BENZ - S-CLASS Coupe (C216) 05/06→12/13								
Guide Bolt, brake caliper								
CL 500	285	06/06→12/13		07/06→	2	**11.8171-0008.1**	**990049**	ATE
				02/11→	2	**11.8171-0008.1**	**990049**	ATE
CL 500 CL 500 4-matic	320 320	02/11→12/13 02/11→12/13			2	**11.8171-0008.1**	**990049**	ATE
CL 500 4-matic	285	02/08→12/13		03/08→	2	**11.8171-0008.1**	**990049**	ATE
MERCEDES-BENZ - S-CLASS Saloon (W108, W109) 01/66→08/72								
Accessory Kit, parking brake shoes								
250 S	96	01/66→12/69		→ 01/68		**03.0137-9700.2**	**669700**	
				→ 03/69		**03.0137-9700.2**	**669700**	
250 SE 280 SE SEL 3.5 300 SEL 3.5 300 SEL 6.3	110 147 147 147 184	01/66→12/67 03/71→08/72 03/71→08/72 01/70→07/72 03/68→08/72				**03.0137-9700.2**	**669700**	
280 S	103	10/67→07/72		11/67→		**03.0137-9700.2**	**669700**	
280 SE SEL	118 118	01/68→08/72 01/68→08/72		→ 03/71		**03.0137-9700.2**	**669700**	
						03.0137-9700.2	**669700**	
300 SEL	118	01/68→08/72		→ 01/70		**03.0137-9700.2**	**669700**	
MERCEDES-BENZ - SL (R107) 05/71→12/89								
Accessory Kit, parking brake shoes								
280 SL 300 SL 350 SL 380 SL 420 SL 500 SL	130 132 - 138 143 150 - 160 150 - 160 164 - 180	06/76→09/81 09/85→08/89 05/71→02/80 09/80→08/85 01/86→08/89 05/80→08/89				**03.0137-9700.2**	**669700**	
280 SL	136	08/74→07/85		09/74→		**03.0137-9700.2**	**669700**	
450 SL	160	09/75→10/80		→ 09/80		**03.0137-9700.2**	**669700**	
450 SL	165	10/72→10/80		03/73→ 09/80		**03.0137-9700.2**	**669700**	
560 SL	169	09/85→12/89		→ 07/89		**03.0137-9700.2**	**669700**	
MERCEDES-BENZ - SL (R230) 10/01→01/12								
Guide Bolt, brake caliper								
280 300 350 500	170 170 200 - 232 225 - 285	03/08→01/12 04/09→01/12 03/06→01/12 10/01→01/12		→ 11/11	2	**11.8171-0008.1**	**990049**	ATE

	kW				! #			
MERCEDES-BENZ - SL Coupe (C107) 01/72→08/85								
Accessory Kit, parking brake shoes								
280 SLC	130	06/76→09/81		→ 03/80		**03.0137-9700.2**	**669700**	
280 SLC	136	08/74→09/81		09/74→ 03/80		**03.0137-9700.2**	**669700**	
350 SLC 380 SLC 450 SLC 450 SLC 5.0	143 - 147 160 160 177	01/72→02/80 07/80→08/81 09/75→08/79 06/78→02/80				**03.0137-9700.2**	**669700**	
450 SLC	165	01/73→11/75		03/73→		**03.0137-9700.2**	**669700**	
MERCEDES-BENZ - SLK (R170) 04/96→04/04								
Guide Bolt, brake caliper								
200 200 Kompressor 230 Kompressor	100 141 142	09/96→03/00 10/96→03/00 09/96→03/00	←		2	**11.8171-0008.1**	**990049**	ATE
200 Kompressor 230 Kompressor	120 145	03/00→04/04 03/00→04/04	←	→ 03/04	2	**11.8171-0008.1**	**990049**	ATE
320	160	03/00→04/04	←	04/00→ 03/04	2	**11.8171-0008.1**	**990049**	ATE
MERCEDES-BENZ - SPRINTER 2-t Bus (B901, B902) 01/95→05/06								
Guide Bolt, brake caliper								
208 CDI	60	04/00→05/06	←		2	**11.8171-0008.1**	**990049**	ATE
208 D 210 D 211 CDI 212 D 213 CDI 214 214 NGT 216 CDI	58 75 80 90 95 105 95 115	02/95→04/00 03/97→04/00 04/00→05/06 02/95→04/00 04/00→05/06 02/95→05/06 02/95→05/06 04/00→05/06	→		2	**11.8171-0008.1**	**990049**	ATE
Accessory Kit, parking brake shoes								
208 CDI 208 D 210 D 211 CDI 212 D 213 CDI 214 216 CDI	60 58 75 80 90 95 105 115	04/00→05/06 02/95→04/00 03/97→04/00 04/00→05/06 02/95→04/00 04/00→05/06 02/95→05/06 04/00→05/06				**03.0137-9700.2**	**669700**	
214 NGT	95	02/95→05/06		04/00→		**03.0137-9700.2**	**669700**	
MERCEDES-BENZ - SPRINTER 2-t Platform/Chassis (B901, B902) 01/95→05/06								
Guide Bolt, brake caliper								
208 CDI	60	04/00→05/06	←		2	**11.8171-0008.1**	**990049**	ATE
208 D 210 D 211 CDI 212 D 213 CDI 214 214 NGT 216 CDI	60 75 80 90 95 105 95 115	09/96→04/00 01/97→04/00 04/00→05/06 02/95→04/00 04/00→05/06 02/95→05/06 02/95→05/06 04/00→05/06	→		2	**11.8171-0008.1**	**990049**	ATE
208 D	58	01/95→04/00	←	02/95→	2	**11.8171-0008.1**	**990049**	ATE
			→	02/95→	2	**11.8171-0008.1**	**990049**	ATE
Accessory Kit, parking brake shoes								
208 CDI 208 D 210 D 211 CDI 212 D 213 CDI 214 216 CDI	60 60 75 80 90 95 105 115	04/00→05/06 09/96→04/00 01/97→04/00 04/00→05/06 02/95→04/00 04/00→05/06 02/95→05/06 04/00→05/06				**03.0137-9700.2**	**669700**	
208 D	58	01/95→04/00		02/95→		**03.0137-9700.2**	**669700**	
214 NGT	95	02/95→05/06		04/00→		**03.0137-9700.2**	**669700**	
MERCEDES-BENZ - SPRINTER 2-t Van (B901, B902) 01/95→05/06								
Guide Bolt, brake caliper								
208 CDI	60	04/00→05/06	←		2	**11.8171-0008.1**	**990049**	ATE
208 D 210 D 211 CDI 212 D 213 CDI	58 - 60 75 80 90 95	02/95→04/00 01/97→04/00 04/00→05/06 02/95→04/00 04/00→05/06	→		2	**11.8171-0008.1**	**990049**	ATE

© 2022 Continental Aftermarket & Services GmbH

	kW				! #			
MERCEDES-BENZ - SPRINTER 2-t Van (B901, B902) 01/95→05/06								
Guide Bolt, brake caliper								
214	105	02/95→05/06	←		2	**11.8171-0008.1**	**990049**	ATE
214 NGT	95	02/95→05/06						
216 CDI	115	04/00→05/06	→		2	**11.8171-0008.1**	**990049**	ATE
Accessory Kit, parking brake shoes								
208 CDI	60	04/00→05/06				**03.0137-9700.2**	**669700**	
208 D	58 - 60	02/95→04/00						
210 D	75	01/97→04/00						
211 CDI	80	04/00→05/06						
212 D	90	02/95→04/00						
213 CDI	95	04/00→05/06						
214	105	02/95→05/06						
216 CDI	115	04/00→05/06						
214 NGT	95	02/95→05/06		04/00→		**03.0137-9700.2**	**669700**	
MERCEDES-BENZ - SPRINTER 3,5-t Bus (B906) 06/06→								
Accessory Kit, parking brake shoes								
310 CDI	70	03/09→12/13				**03.0137-9700.2**	**669700**	
311 CDI	80 - 84	06/06→						
311 CDI 4x4	80	02/08→12/09						
313 CDI	95	08/11→05/16						
313 CDI 4x4	95	08/11→05/16						
314 CDI	105	05/16→						
314 CDI 4x4	105	05/16→						
315 CDI	110	06/06→						
315 CDI 4x4	110	02/08→12/09						
316	115	09/08→						
316 CDI	120	08/11→						
316 CDI 4x4	120	08/11→						
316 LGT	115	09/08→						
316 NGT	115	03/09→						
318 CDI	135	02/08→12/09						
318 CDI 4x4	135	02/08→12/09						
319 CDI / BlueTEC	140	03/09→						
319 CDI / BlueTEC 4x4	140	03/09→						
324	190	06/06→12/13						
MERCEDES-BENZ - SPRINTER 3,5-t Platform/Chassis (B906) 06/06→								
Accessory Kit, parking brake shoes								
309 CDI	65	06/06→12/09				**03.0137-9700.2**	**669700**	
310 CDI	70	03/09→05/16						
311 CDI	80 - 84	06/06→						
311 CDI 4x4	80	02/08→12/09						
313 CDI	95	06/06→05/16						
313 CDI 4x4	95	06/06→05/16						
314 CDI	105	05/16→						
314 CDI 4x4	105	05/16→						
315 CDI	110	06/06→12/09						
315 CDI 4x4	110	02/08→12/09						
316	115	09/08→						
316 CDI	120	03/09→						
316 CDI 4x4	120	03/09→						
316 LGT	115	09/08→						
316 NGT	115	09/08→						
318 CDI	135	06/06→12/09						
318 CDI 4x4	135	02/08→12/09						
319 CDI / BlueTEC	140	03/09→						
319 CDI / BlueTEC 4x4	140	05/11→						
324	190	06/06→12/13						
MERCEDES-BENZ - SPRINTER 3,5-t Platform/Chassis (B907, B910) 02/18→								
Accessory Kit, parking brake shoes								
311 CDI	84	02/18→	→	- eFSB		**03.0137-9700.2**	**669700**	
311 CDI RWD	84	02/18→						
314 CDI	105	02/18→						
314 CDI All-wheel Drive	105	01/19→						
314 CDI RWD	105	02/18→						
315 CDI RWD	110	06/20→						
316 CDI All-wheel Drive	120	01/19→						
316 CDI RWD	120	02/18→						
317 CDI RWD	125	06/20→						
319 CDI All-wheel Drive	140	01/19→						
319 CDI RWD	140	02/18→						
MERCEDES-BENZ - SPRINTER 3,5-t Tourer Bus (B907) 02/18→								
Accessory Kit, parking brake shoes								
311 CDI	84	02/18→	→	- eFSB		**03.0137-9700.2**	**669700**	

	kW				! #			
MERCEDES-BENZ - SPRINTER 3,5-t Tourer Bus (B907) 02/18→								
Accessory Kit, parking brake shoes								
314 CDI	105	02/18→	➡	- eFSB		**03.0137-9700.2**	**669700**	
314 CDI All-wheel Drive	105	01/19→						
316 CDI	120	02/18→						
316 CDI All-wheel Drive	120	01/19→						
319 CDI	140	02/18→						
319 CDI All-wheel Drive	140	01/19→						
MERCEDES-BENZ - SPRINTER 3,5-t Van (B906) 06/06→								
Accessory Kit, parking brake shoes								
309 CDI	65	06/06→12/09				**03.0137-9700.2**	**669700**	
310 CDI	70	03/09→						
311 CDI	80 - 84	06/06→						
311 CDI 4x4	80	02/08→12/09						
313 CDI	95	06/06→						
313 CDI 4x4	95	05/09→						
314 CDI	105	05/16→						
314 CDI 4x4	105	05/16→						
315 CDI	110	06/06→						
315 CDI 4x4	110	02/08→12/09						
316	115	09/08→						
316 CDI	120	03/09→						
316 CDI 4x4	120	03/09→						
316 LGT	115	09/08→						
316 NGT	115	09/08→						
318 CDI	135	06/06→12/09						
318 CDI 4x4	135	02/08→12/09						
319 CDI / BlueTEC	140	03/09→						
319 CDI / BlueTEC 4x4	140	03/09→						
324	190	06/06→12/13						
MERCEDES-BENZ - SPRINTER 3,5-t Van (B907, B910) 02/18→								
Accessory Kit, parking brake shoes								
311 CDI	84	02/18→	➡	- eFSB		**03.0137-9700.2**	**669700**	
311 CDI RWD	84	02/18→						
314 CDI	105	02/18→						
314 CDI All-wheel Drive	105	01/19→						
314 CDI RWD	105	02/18→						
315 CDI RWD	110	06/20→						
316 CDI All-wheel Drive	120	01/19→						
316 CDI RWD	120	02/18→						
317 CDI RWD	125	06/20→						
319 CDI All-wheel Drive	140	01/19→						
319 CDI RWD	140	02/18→						
MERCEDES-BENZ - SPRINTER 3-t Bus (B903) 01/95→05/12								
Guide Bolt, brake caliper								
308 CDI	60	04/00→05/06	⬅		2	**11.8171-0008.1**	**990049**	ATE
308 D	58 - 60	02/95→04/00	➡		2	**11.8171-0008.1**	**990049**	ATE
310 D	75	01/97→12/99						
310 D 4x4	75	05/97→08/02						
311 CDI	80	04/00→05/06						
311 CDI 4x4	80	08/02→05/06						
312 D 2.9	90	02/95→04/00						
312 D 2.9 4x4	90	05/97→08/02						
313 CDI	95	04/00→05/06						
313 CDI 4x4	95	08/02→05/06						
314	105	02/95→05/06						
314 4x4	105	08/02→05/06						
314 NGT	95	02/95→05/06						
316 CDI	115	04/00→05/06						
316 CDI 4x4	115	08/02→05/06						
Accessory Kit, parking brake shoes								
308 CDI	60	04/00→05/06				**03.0137-9700.2**	**669700**	
308 D	58 - 60	02/95→04/00						
310 D	75	01/97→12/99						
310 D 4x4	75	05/97→08/02						
311 CDI	80	04/00→05/06						
311 CDI 4x4	80	08/02→05/06						
312 D 2.9	90	02/95→04/00						
312 D 2.9 4x4	90	05/97→08/02						
313 CDI	95	04/00→05/06						
313 CDI 4x4	95	08/02→05/06						
314	105	02/95→05/06						
314 4x4	105	08/02→05/06						
316 CDI	115	04/00→05/06						
316 CDI 4x4	115	08/02→05/06						
314 NGT	95	02/95→05/06		04/00→		**03.0137-9700.2**	**669700**	

© 2022 Continental Aftermarket & Services GmbH

	kW				! #			
MERCEDES-BENZ - SPRINTER 3-t Bus (B906) 06/06→								
Accessory Kit, parking brake shoes								
210 CDI	70	03/09→12/13				**03.0137-9700.2**	**669700**	
211 CDI	80 - 84	06/06→						
213 CDI	95	06/06→05/16						
214 CDI	105	04/16→						
215 CDI	110	06/06→12/09						
216	115	09/08→						
224	190	06/06→12/13						
216 CDI	120	06/06→		03/09→		**03.0137-9700.2**	**669700**	
MERCEDES-BENZ - SPRINTER 3-t Platform/Chassis (B903) 01/95→05/12								
Guide Bolt, brake caliper								
308 CDI	60	04/00→05/06	←		2	**11.8171-0008.1**	**990049**	ATE
308 D 2.3	58 - 60	02/95→04/00	→		2	**11.8171-0008.1**	**990049**	ATE
310 D 2.9	75	01/97→04/00						
311 CDI	80	04/00→05/06						
311 CDI 4x4	80	04/00→05/06						
312 D 2.9	85 - 90	02/95→09/01						
313 CDI	95	04/00→05/06						
313 CDI 4x4	95	04/00→05/06						
314	105	02/95→05/06						
314 4x4	105	08/02→05/06						
314 NGT	95	02/95→05/06						
316 CDI	115	04/00→05/06						
316 CDI 4x4	115	08/02→05/06						
Accessory Kit, parking brake shoes								
308 CDI	60	04/00→05/06				**03.0137-9700.2**	**669700**	
308 D 2.3	58 - 60	02/95→04/00						
310 D 2.9	75	01/97→04/00						
311 CDI	80	04/00→05/06						
311 CDI 4x4	80	04/00→05/06						
312 D 2.9	85 - 90	02/95→09/01						
313 CDI	95	04/00→05/06						
313 CDI 4x4	95	04/00→05/06						
314	105	02/95→05/06						
314 4x4	105	08/02→05/06						
316 CDI	115	04/00→05/06						
316 CDI 4x4	115	08/02→05/06						
314 NGT	95	02/95→05/06		04/00→		**03.0137-9700.2**	**669700**	
MERCEDES-BENZ - SPRINTER 3-t Platform/Chassis (B906) 06/06→								
Accessory Kit, parking brake shoes								
209 CDI	65	06/06→12/09				**03.0137-9700.2**	**669700**	
210 CDI	70	03/09→05/16						
211 CDI	80 - 84	06/06→						
213 CDI	95	06/06→05/16						
214 CDI	105	04/16→						
215 CDI	110	06/06→12/09						
216	115	09/08→05/16						
216 CDI	120	03/09→						
218 CDI	135	06/06→12/09						
219 CDI / BlueTEC	140	03/09→05/16						
224	190	06/06→12/13						
MERCEDES-BENZ - SPRINTER 3-t Platform/Chassis (B910, B907) 02/18→								
Accessory Kit, parking brake shoes								
211 CDI	84	02/18→	→	- eFSB		**03.0137-9700.2**	**669700**	
211 CDI RWD	84	02/18→						
214 CDI	105	02/18→						
214 CDI RWD	105	02/18→						
215 CDI RWD	110	06/20→						
216 CDI RWD	120	02/18→						
217 CDI RWD	125	06/20→						
MERCEDES-BENZ - SPRINTER 3-t Tourer Bus (B907) 02/18→								
Accessory Kit, parking brake shoes								
211 CDI	84	02/18→	→	- eFSB		**03.0137-9700.2**	**669700**	
214 CDi	105	02/18→						
MERCEDES-BENZ - SPRINTER 3-t Van (B903) 01/95→05/12								
Guide Bolt, brake caliper								
308 CDI	60	04/00→05/06	←		2	**11.8171-0008.1**	**990049**	ATE

	kW				! #			
MERCEDES-BENZ - SPRINTER 3-t Van (B903) 01/95→05/12								
Guide Bolt, brake caliper								
308 D 2.3	58 - 60	02/95→04/00	➡		2	**11.8171-0008.1**	**990049**	ATE
310 D 2.9	75	02/95→04/00						
311 CDI	80	04/00→05/06						
311 CDI 4x4	80	08/02→05/06						
312 D 2.9	90	02/95→04/00						
312 D 2.9 4x4	90	05/97→08/02						
313 CDI	95	04/00→05/06						
313 CDI 4x4	95	08/02→05/06						
314	105	02/95→05/06						
314 4x4	105	08/02→05/06						
314 NGT	95	02/95→05/06						
316 CDI	115	04/00→05/06						
316 CDI 4x4	115	02/01→05/06						
Accessory Kit, parking brake shoes								
308 CDI	60	04/00→05/06				**03.0137-9700.2**	**669700**	
308 D 2.3	58 - 60	02/95→04/00						
310 D 2.9	75	02/95→04/00						
311 CDI	80	04/00→05/06						
311 CDI 4x4	80	08/02→05/06						
312 D 2.9	90	02/95→04/00						
312 D 2.9 4x4	90	05/97→08/02						
313 CDI	95	04/00→05/06						
313 CDI 4x4	95	08/02→05/06						
314	105	02/95→05/06						
314 4x4	105	08/02→05/06						
316 CDI	115	04/00→05/06						
316 CDI 4x4	115	02/01→05/06						
314 NGT	95	02/95→05/06		04/00→		**03.0137-9700.2**	**669700**	
MERCEDES-BENZ - SPRINTER 3-t Van (B906) 06/06→								
Accessory Kit, parking brake shoes								
209 CDI	65	06/06→12/09				**03.0137-9700.2**	**669700**	
210 CDI	70	03/09→						
211 CDI	80 - 84	06/06→						
213 CDI	95	06/06→						
214 CDI	105	04/16→						
215 CDI	110	06/06→12/09						
216	115	09/08→						
216 CDI	120	03/09→						
218 CDI	135	06/06→12/09						
219 CDI / BlueTEC	140	03/09→						
224	190	06/06→						
MERCEDES-BENZ - SPRINTER 3-t Van (B910) 02/18→								
Accessory Kit, parking brake shoes								
211 CDI	84	02/18→	➡	- eFSB		**03.0137-9700.2**	**669700**	
214 CDI	105	02/18→						
MERCEDES-BENZ - SPRINTER 4,6-t Platform/Chassis (B906) 06/06→								
Accessory Kit, parking brake shoes								
411 CDI	80 - 84	06/09→				**03.0137-9700.2**	**669700**	
413 CDI	95	03/09→						
414 CDI	105	05/16→						
415 CDI	110	06/06→12/09						
416 CDI	120	03/09→						
418 CDI	135	06/06→12/09						
419 CDI	140	03/09→						
424	190	06/06→12/13						
MERCEDES-BENZ - SPRINTER 4,6-t Van (B906) 06/06→								
Accessory Kit, parking brake shoes								
411 CDI	80	06/09→12/18				**03.0137-9700.2**	**669700**	
413 CDI	95	06/06→05/16						
414 CDI	105	05/16→						
415 CDI	110	06/09→12/09						
416 CDI	120	03/09→						
418 CDI	135	06/09→05/16						
419 CDI	140	03/09→						
424	190	06/06→12/13						
MERCEDES-BENZ - SPRINTER 4-t Bus (B904) 02/96→05/06								
Guide Bolt, brake caliper								
408 CDI	60	04/00→05/06	⬅		2	**11.8171-0008.1**	**990049**	ATE
411 CDI	80	04/00→05/06						

© 2022 Continental Aftermarket & Services GmbH

	kW				! #			
MERCEDES-BENZ - SPRINTER 4-t Bus (B904) 02/96→05/06								
Guide Bolt, brake caliper								
413 CDI	95	04/00→05/06	←		2	**11.8171-0008.1**	**990049**	ATE
414	105	02/96→05/06						
416 CDI	115	04/00→05/06						
Accessory Kit, parking brake shoes								
408 CDI	60	04/00→05/06				**03.0137-9700.2**	**669700**	
411 CDI	80	04/00→05/06						
413 CDI	95	04/00→05/06						
414	105	02/96→05/06						
416 CDI	115	04/00→05/06						
MERCEDES-BENZ - SPRINTER 4-t Platform/Chassis (B904) 02/95→05/12								
Guide Bolt, brake caliper								
408 CDI	60	04/00→05/06	←		2	**11.8171-0008.1**	**990049**	ATE
408 D	58	02/96→05/06						
410 D 4x4	75	05/97→05/06						
411 CDI	80	04/00→05/06						
411 CDI 4x4	80	04/00→05/06						
412 D	85 - 90	02/96→05/06						
412 D 4x4	85 - 90	05/97→05/06						
413 CDI	95	04/00→05/06						
413 CDI 4x4	95	04/00→05/06						
414	105	02/95→05/06						
414 4x4	105	05/97→05/06						
416 CDI	115	04/00→05/06						
416 CDI 4x4	115	04/00→05/06						
410 D	75	02/96→05/06	←	09/96→	2	**11.8171-0008.1**	**990049**	ATE
Accessory Kit, parking brake shoes								
408 CDI	60	04/00→05/06				**03.0137-9700.2**	**669700**	
408 D	58	02/96→05/06						
410 D 4x4	75	05/97→05/06						
411 CDI	80	04/00→05/06						
411 CDI 4x4	80	04/00→05/06						
412 D	85 - 90	02/96→05/06						
412 D 4x4	85 - 90	05/97→05/06						
413 CDI	95	04/00→05/06						
413 CDI 4x4	95	04/00→05/06						
414 4x4	105	05/97→05/06						
416 CDI	115	04/00→05/06						
416 CDI 4x4	115	04/00→05/06						
410 D	75	02/96→05/06		09/96→		**03.0137-9700.2**	**669700**	
414	105	02/95→05/06		06/95→		**03.0137-9700.2**	**669700**	
MERCEDES-BENZ - SPRINTER 4-t Platform/Chassis (B907, B910) 02/18→								
Accessory Kit, parking brake shoes								
411 CDI	84	02/18→	→	- eFSB		**03.0137-9700.2**	**669700**	
411 CDI RWD	84	02/18→						
414 CDI	105	02/18→						
414 CDI All-wheel Drive	105	01/19→						
414 CDI RWD	105	02/18→						
416 CDI All-wheel Drive	120	01/19→						
416 CDI RWD	120	02/18→						
419 CDI All-wheel Drive	140	01/19→						
419 CDI RWD	140	02/18→						
MERCEDES-BENZ - SPRINTER 4-t Tourer Bus (B907) 02/18→								
Accessory Kit, parking brake shoes								
411 CDI	84	02/18→	→	- eFSB		**03.0137-9700.2**	**669700**	
414 CDI	105	09/19→						
419 CDI	140	02/18→						
MERCEDES-BENZ - SPRINTER 4-t Van (B904) 02/95→05/12								
Guide Bolt, brake caliper								
408 CDI	60	04/00→05/06	←		2	**11.8171-0008.1**	**990049**	ATE
408 D	58	02/96→05/06						
410 D 4x4	75	05/97→05/06						
411 CDI	80	04/00→05/06						
411 CDI 4x4	80	04/00→05/06						
412 D	85 - 90	02/96→05/06						
412 D 4x4	85 - 90	05/97→05/06						
413 CDI	95	04/00→05/06						
413 CDI 4x4	95	04/00→05/06						

	kW				! #			
MERCEDES-BENZ - SPRINTER 4-t Van (B904) 02/95→05/12								
Guide Bolt, brake caliper								
414 414 4x4 414 D 4x4 414 NGT 416 CDI 416 CDI 4x4	105 105 90 95 115 115	02/96→05/06 05/97→05/06 05/97→05/06 02/95→05/06 04/00→05/06 04/00→05/06	←		2	**11.8171-0008.1**	**990049**	ATE
410 D	75	02/96→05/06	←	09/96→	2	**11.8171-0008.1**	**990049**	ATE
Accessory Kit, parking brake shoes								
408 CDI 408 D 410 D 4x4 411 CDI 411 CDI 4x4 412 D 412 D 4x4 413 CDI 413 CDI 4x4 414 414 4x4 414 D 4x4 416 CDI 416 CDI 4x4	60 58 75 80 80 85 - 90 85 - 90 95 95 105 105 90 115 115	04/00→05/06 02/96→05/06 05/97→05/06 04/00→05/06 04/00→05/06 02/96→05/06 05/97→05/06 04/00→05/06 04/00→05/06 02/96→05/06 05/97→05/06 05/97→05/06 04/00→05/06 04/00→05/06				**03.0137-9700.2**	**669700**	
410 D	75	02/96→05/06		09/96→		**03.0137-9700.2**	**669700**	
414 NGT	95	02/95→05/06		06/95→		**03.0137-9700.2**	**669700**	
MERCEDES-BENZ - SPRINTER 4-t Van (B907, B910) 02/18→								
Accessory Kit, parking brake shoes								
411 CDI 411 CDI RWD 414 CDI 414 CDI All-wheel Drive 414 CDI RWD 416 CDI All-wheel Drive 416 CDI RWD 417 CDI RWD 419 CDI All-wheel Drive 419 CDI RWD	84 84 105 105 105 120 120 125 140 140	02/18→ 02/18→ 02/18→ 01/19→ 02/18→ 01/19→ 02/18→ 06/20→ 01/19→ 02/18→	→	- eFSB		**03.0137-9700.2**	**669700**	
MERCEDES-BENZ - SPRINTER 5-t Platform/Chassis (B907) 02/18→								
Brake Pad Set, disc brake								
511 CDI 514 CDI 516 CDI 516 CDI All-wheel Drive 519 CDI 519 CDI All-wheel Drive	84 105 120 120 140 140	02/18→ 02/18→ 02/18→ 01/19→ 02/18→ 01/19→	→	- eFSB		**13.0460-4708.2**	**604708**	BRE + WE / - WK
MERCEDES-BENZ - SPRINTER 5-t Van (B907) 02/18→								
Brake Pad Set, disc brake								
511 CDI 514 CDI 516 CDI 516 CDI All-wheel Drive 519 CDI 519 CDI All-wheel Drive	84 105 120 120 140 140	02/18→ 02/18→ 02/18→ 01/19→ 02/18→ 01/19→	→	- eFSB		**13.0460-4708.2**	**604708**	BRE + WE / - WK
MERCEDES-BENZ - SPRINTER CLASSIC 3,5-t Van (B909) 09/13→								
Guide Bolt, brake caliper								
311 CDI 313 CDI	80 100	09/13→ 01/17→	←		2	**11.8171-0008.1**	**990049**	ATE
			→		2	**11.8171-0008.1**	**990049**	ATE
Accessory Kit, parking brake shoes								
311 CDI 313 CDI	80 100	09/13→ 01/17→				**03.0137-9700.2**	**669700**	
MERCEDES-BENZ - SPRINTER CLASSIC 4,6-t Bus (B909) 09/13→								
Guide Bolt, brake caliper								
411 CDI	80	09/13→	←		2	**11.8171-0008.1**	**990049**	ATE
Accessory Kit, parking brake shoes								
411 CDI	80	09/13→				**03.0137-9700.2**	**669700**	

© 2022 Continental Aftermarket & Services GmbH

	kW				! #			
MERCEDES-BENZ - SPRINTER CLASSIC 4,6-t Van (B909) 01/17→								
Guide Bolt, brake caliper								
413 CDI	100	01/17→	←		2	**11.8171-0008.1**	**990049**	ATE
Accessory Kit, parking brake shoes								
413 CDI	100	01/17→				**03.0137-9700.2**	**669700**	
MERCEDES-BENZ - V-CLASS (638/2) 02/96→07/03								
Guide Bolt, brake caliper								
V 200 V 200 CDI V 220 CDI V 230 V 230 TD	95 75 90 105 72	02/97→07/03 03/99→07/03 03/99→07/03 10/96→07/03 09/96→07/03	←		2	**11.8171-0008.1**	**990049**	ATE
V 280	128	08/97→07/03	←	09/97→	2	**11.8171-0008.1**	**990049**	ATE
MERCEDES-BENZ - VITO Bus (W638) 02/96→07/03								
Guide Bolt, brake caliper								
108 CDI 2.2 110 CDI 2.2 112 CDI 2.2 114 2.3	60 75 90 105	03/99→07/03 03/99→07/03 03/99→07/03 12/96→07/03			2	**11.8171-0008.1**	**990049**	ATE
108 D 2.3 110 TD 2.3 113 2.0	58 72 95	02/96→07/03 02/96→07/03 02/96→07/03		03/96→	2	**11.8171-0008.1**	**990049**	ATE
MERCEDES-BENZ - VITO Van (W638) 03/97→07/03								
Guide Bolt, brake caliper								
108 CDI 2.2 108 D 2.3 110 CDI 2.2 110 D 2.3 112 CDI 2.2 113 2.0 114 2.3	60 58 75 72 90 95 105	03/99→07/03 03/97→07/03 03/99→07/03 03/97→07/03 03/99→07/03 03/97→07/03 03/97→07/03			2	**11.8171-0008.1**	**990049**	ATE
MERCEDES-BENZ - X-CLASS (470) 09/17→05/20								
Brake Pad Set, disc brake								
X 220 d X 220 d 4-matic X 250 d X 250 d 4-matic X 350 d 4-matic	120 120 140 140 190	09/17→05/20 09/17→05/20 09/17→05/20 09/17→05/20 07/18→05/20	←			**13.0460-3887.2**	**603887**	+ WK + Zub
MERCEDES-BENZ - X-CLASS Platform/Chassis (470) 09/17→								
Brake Pad Set, disc brake								
X 220 d X 250 d 4-matic	120 140	09/17→ 09/17→	←			**13.0460-3887.2**	**603887**	+ WK + Zub
MG - EXPRESS Hatchback Van 03/03→05/05								
Brake Pad Set, disc brake								
160	118	03/03→05/05	→			**13.0460-5929.2**	**605929**	AKE 21719 15,0 + WK
MG - MG ZR 06/01→04/05								
Brake Pad Set, disc brake								
160	118	06/01→04/05	→			**13.0460-5929.2**	**605929**	AKE 21719 15,0 + WK
MINI - MINI (F55) 09/13→								
Brake Caliper								
Cooper S Cooper SD	120 - 141 120 - 125	09/13→ 09/13→	←	◪		**24.3541-1862.5**	**241278**	TRW without holder
MINI - MINI (F56) 12/13→								
Brake Caliper								
Cooper S Cooper SD	120 - 141 120 - 125	12/13→ 06/14→10/17	←	◪		**24.3541-1862.5**	**241278**	TRW without holder

	kW				! #			
MINI - MINI (R50, R53) 06/01→09/06								
Guide Bolt, brake caliper								
Cooper	85	06/01→09/06		→ 03/03	2	**11.8171-0008.1**	**990049**	ATE
One	66	06/01→09/06		04/03→	2	**11.8171-0008.1**	**990049**	ATE
					2	**11.8171-0008.1**	**990049**	ATE
Cooper S	120	03/02→09/06		07/02→ 03/03	2	**11.8171-0008.1**	**990049**	ATE
				04/03→	2	**11.8171-0008.1**	**990049**	ATE
				07/02→	2	**11.8171-0008.1**	**990049**	ATE
Cooper S	125	07/04→09/06			2	**11.8171-0008.1**	**990049**	ATE
John Cooper Works	160	03/06→09/06						
One	55	04/03→09/06						
One D	55 - 65	06/03→09/06						
S Works	149	11/03→06/05						
Works	155	11/03→09/06						
MINI - MINI CLUBMAN (F54) 11/14→								
Brake Caliper								
Cooper	100	12/14→	←			**24.3541-1862.5**	**241278**	TRW without holder
Cooper D	100 - 110	12/14→						
MINI - MINI Convertible (F57) 11/14→								
Brake Caliper								
Cooper S	120 - 141	11/14→	←			**24.3541-1862.5**	**241278**	TRW without holder
Cooper SD	120 - 125	05/15→						
MINI - MINI Convertible (R52) 04/04→07/08								
Guide Bolt, brake caliper								
Cooper	85	04/04→07/08			2	**11.8171-0008.1**	**990049**	ATE
Cooper S	120 - 125	07/04→11/07						
John Cooper Works	155	07/04→11/07						
One	66	07/04→11/07						
MINI - MINI COUNTRYMAN (F60) 10/16→								
Brake Caliper								
One	75	07/17→	←			**24.3541-1862.5**	**241278**	TRW without holder
One D	85	07/17→						
MITSUBISHI - ASX (GA_W_) 11/09→								
Brake Hose								
1.6 LPG	86	06/10→	→	→ 06/12; Outer	2	**24.5101-0223.3**	**331616**	L= 245
1.6 MIVEC	86	06/10→						
1.8	102	02/10→						
1.8 DI-D	85 - 110	06/10→						
1.8 DI-D 4WD	85 - 110	06/10→						
2.0 MIVEC	110	06/10→						
2.0 MIVEC 4WD	110	06/10→						
1.6 MIVEC	85	05/10→	→	06/10→ 06/12; Outer	2	**24.5101-0223.3**	**331616**	L= 245
MITSUBISHI - ASX Van (GA_W_) 06/10→								
Brake Hose								
1.8 DI-D 4WD	110	06/10→	→	→ 06/12; Outer	2	**24.5101-0223.3**	**331616**	L= 245
MITSUBISHI - ECLIPSE III (D5_A) 04/99→12/05								
Brake Pad Set, disc brake								
3.0	149 - 157	05/99→03/05	←	06/00→		**13.0460-5853.2**	**605853**	SUM 23488 15,4 + WK
MITSUBISHI - ECLIPSE Convertible (D5_A) 05/99→12/05								
Brake Pad Set, disc brake								
3.0	149 - 157	05/99→03/05	←	→ 06/00		**13.0460-5853.2**	**605853**	SUM 23488 15,4 + WK
MITSUBISHI - GRANDIS (NA_W) 03/03→12/11								
Brake Pad Set, disc brake								
2.0 DI-D	100 - 103	09/05→03/10	←			**13.0460-5853.2**	**605853**	SUM 23488 15,4 + WK

© 2022 Continental Aftermarket & Services GmbH

	kW				! #			
MITSUBISHI - GRANDIS (NA_W) 03/03→12/11								
Brake Pad Set, disc brake								
2.4 MIVEC 2.4 MIVEC 4WD	121 - 130 121	04/04→12/11 04/04→12/11	←	→ 08/10		**13.0460-5853.2**	**605853**	SUM 23488 15,4 + WK
MITSUBISHI - L200 / TRITON (KA_T, KB_T) 01/04→12/16								
Brake Pad Set, disc brake								
2.4 4WD 2.5 D 2.5 D 4WD 2.5 DI-D 2.5 DI-D 16V 4WD 2.5 DI-D 4WD 3.5 4WD 3.5 Flex 4WD	97 55 - 66 55 94 - 131 98 123 - 131 137 - 147 147	08/11→12/15 08/11→12/15 08/11→12/15 08/07→12/15 04/07→12/15 10/07→12/15 05/07→12/15 09/09→12/15	←			**13.0460-5631.2**	**605631**	24529 16,0 + WK
2.5 DiD 2.5 DI-D 4WD	100 100	11/05→12/15 11/05→12/15	←	01/06→		**13.0460-5631.2**	**605631**	24529 16,0 + WK
MITSUBISHI - L200 / TRITON (KJ_, KK_, KL_) 11/14→								
Brake Pad Set, disc brake								
2.4 2.4 4WD 2.4 DI-D 2.4 DI-D 4WD	97 97 133 133	11/14→ 11/14→ 01/15→ 11/14→	←	09/15→		**13.0460-5631.2**	**605631**	24529 16,0 + WK
2.4 DI-D 2.4 DI-D 4WD 2.5 DI-D 2.5 DI-D 4WD	113 113 100 100	09/15→ 09/15→ 01/15→ 11/14→	←			**13.0460-5631.2**	**605631**	24529 16,0 + WK
Brake Disc								
2.2 DI-D 2.2 DI-D 4WD 2.4 DI-D 2.4 DI-D 4WD 2.5 DI-D 2.5 DI-D 4WD	110 110 113 113 100 100	07/19→ 07/19→ 09/15→ 09/15→ 01/15→ 11/14→	←	for individual equipment ID: C05		**24.0128-0309.1**	**428309**	Ø 294 Brake Disc Thickness [mm] 28.2 Minimum thickness [mm] 26.4 Vented
2.4 2.4 4WD 2.4 DI-D 2.4 DI-D 4WD	97 97 133 133	11/14→ 11/14→ 01/15→ 11/14→	←	09/15→; for individual equipment ID: C05		**24.0128-0309.1**	**428309**	Ø 294 Brake Disc Thickness [mm] 28.2 Minimum thickness [mm] 26.4 Vented
MITSUBISHI - L200 / TRITON Platform/Chassis (KA_T, KB_T) 03/06→12/15								
Brake Pad Set, disc brake								
2.5 DiD 2.5 DI-D 4WD	100 131	01/08→12/15 09/09→12/15	←	04/10→		**13.0460-5631.2**	**605631**	24529 16,0 + WK
2.5 DI-D	94	08/07→12/15	←			**13.0460-5631.2**	**605631**	24529 16,0 + WK
MITSUBISHI - L200 Platform/Chassis (MQ) 01/15→								
Brake Pad Set, disc brake								
2.4 D 4WD	133	01/15→	←			**13.0460-5631.2**	**605631**	24529 16,0 + WK
Brake Disc								
2.4 D 4WD	133	01/15→	←			**24.0128-0309.1**	**428309**	Ø 294 Brake Disc Thickness [mm] 28.2 Minimum thickness [mm] 26.4 Vented
MITSUBISHI - LANCER VII (CS_A, CT_A) 03/00→12/13								
Brake Hose								
2.0 2.0 GDi 2.0 i	92 92 113	08/05→12/13 09/03→12/13 10/07→12/13	→		2	**24.5101-0223.3**	**331616**	L= 245
MITSUBISHI - LANCER VIII (CY_A, CZ_A) 03/07→								
Brake Hose								
1.5 1.5 Bifuel 1.6 MIVEC 1.8 1.8 Bifuel	80 80 86 103 - 105 105	06/08→ 02/10→ 05/10→ 02/08→ 01/10→	→		2	**24.5101-0223.3**	**331616**	L= 245

	kW				! #			
MITSUBISHI - LANCER VIII (CY_A, CZ_A) 03/07→								
Brake Hose								
1.8 DI-D 1.8 Flexfuel 1.8 MIVEC 2.0 2.0 DI-D 2.0 i 2.0 i 4WD 2.0 i Ralliart 4WD	85 - 110 103 - 105 102 108 - 110 103 113 113 177	05/10→ 03/09→ 03/09→ 01/09→ 01/08→ 04/07→ 03/07→ 10/08→	→		2	**24.5101-0223.3**	**331616**	L= 245
1.8 Mivec	110	11/09→	→	Outer	2	**24.5101-0223.3**	**331616**	L= 245
MITSUBISHI - LANCER VIII Sportback (CX_A) 10/07→								
Brake Hose								
1.5 1.5 Bifuel 1.6 MIVEC 1.8 1.8 Bifuel 1.8 DI-D 1.8 Flex 1.8 MIVEC 2.0 DI-D	80 80 86 105 105 85 - 110 103 103 103	06/08→ 03/10→ 05/10→ 06/08→ 02/10→ 05/10→ 03/09→ 03/09→ 06/08→	→		2	**24.5101-0223.3**	**331616**	L= 245
MITSUBISHI - PAJERO II (V3_W, V2_W, V4_W) 12/90→05/01								
Cable Pull, parking brake								
2.5 TD 4WD	73	12/90→10/99		→ 05/94; Disc Brake; ◪		**24.3727-2125.2**	**582125**	L= 1,485
3.0 V6 24V	130	06/97→10/99		Disc Brake; ◪		**24.3727-2125.2**	**582125**	L= 1,485
MITSUBISHI - PAJERO II (V3_W) 04/00→09/07								
Brake Pad Set, disc brake								
3.2 DiD 4WD	118 - 121	04/00→09/07	←			**13.0460-5853.2**	**605853**	SUM 23488 15,4 + WK
MITSUBISHI - PAJERO II Canvas Top (V2_W, V4_W) 12/90→04/00								
Cable Pull, parking brake								
2.4	82	04/91→04/00		→ 03/00; Disc Brake; ◪		**24.3727-2125.2**	**582125**	L= 1,485
MITSUBISHI - PAJERO III (V7_W, V6_W) 01/99→09/07								
Brake Pad Set, disc brake								
2.5 TDi 3.2 Di-D	73 - 85 121	04/00→12/06 04/00→10/06	←			**13.0460-5853.2**	**605853**	SUM 23488 15,4 + WK
3.2 Di-D	118	04/00→12/06	←	10/01→ 08/06		**13.0460-5853.2**	**605853**	SUM 23488 15,4 + WK
3.5 3.8 3.8 4WD	149 184 160	04/00→01/07 03/03→01/07 09/02→12/06	←	→ 08/06		**13.0460-5853.2**	**605853**	SUM 23488 15,4 + WK
MITSUBISHI - PAJERO III Canvas Top (V6_W, V7_W) 02/00→12/06								
Brake Pad Set, disc brake								
2.5 TDi 3.0 3.2 DI-D	73 - 85 125 121	04/00→12/06 10/01→12/06 04/00→12/06	←			**13.0460-5853.2**	**605853**	SUM 23488 15,4 + WK
3.2 DI-D 3.5 V6 GDI	118 149	10/01→12/06 04/00→12/06	←	→ 08/06		**13.0460-5853.2**	**605853**	SUM 23488 15,4 + WK
MITSUBISHI - PAJERO IV (V8_W, V9_W) 10/06→								
Brake Pad Set, disc brake								
3.0 4WD 3.2 4WD 3.5 V6 4WD	128 141 139	08/14→ 10/16→ 09/09→	←			**13.0460-5853.2**	**605853**	SUM 23488 15,4 + WK
3.2 DI-D 3.2 DI-D 4WD	118 - 125 121 - 147	02/07→ 02/07→	←	Type: V88W		**13.0460-5853.2**	**605853**	SUM 23488 15,4 + WK
3.8 V6	182 - 184	10/06→	←	Type: V87W		**13.0460-5853.2**	**605853**	SUM 23488 15,4 + WK

© 2022 Continental Aftermarket & Services GmbH

	kW				! #			
MITSUBISHI - PAJERO IV (V8_W, V9_W) 10/06→								
Cable Pull, parking brake								
3.2 DI-D 3.2 DI-D 4WD	118 - 125 121	02/07→ 11/08→		Disc Brake; Type: V88W;		**24.3727-2118.2**	**582118**	L= 1,672
3.2 DI-D 4WD 3.5 V6 4WD	140 - 147 139	02/07→ 09/09→		Disc Brake;		**24.3727-2118.2**	**582118**	L= 1,672
3.8 V6	182	10/06→		02/10→; Disc Brake;		**24.3727-2118.2**	**582118**	L= 1,672
3.8 V6	184	02/07→		Disc Brake; Type: V87W;		**24.3727-2118.2**	**582118**	L= 1,672
MITSUBISHI - PAJERO IV Van (V9_, V8_, V8_V) 11/06→								
Brake Pad Set, disc brake								
3.2 DI-D	118	11/06→	←	02/07→; Type: V88W		**13.0460-5853.2**	**605853**	SUM 23488 15,4 + WK
3.2 DI-D 4WD	140	02/07→	←	for shortened wheelbase; Type: V88W		**13.0460-5853.2**	**605853**	SUM 23488 15,4 + WK
3.2 TD 4WD	147	01/10→	←	Type: V88W		**13.0460-5853.2**	**605853**	SUM 23488 15,4 + WK
Cable Pull, parking brake								
3.2 DI-D	118	11/06→		Disc Brake; Type: V88W;		**24.3727-2118.2**	**582118**	L= 1,672
3.2 DI-D 4WD 3.2 TD 4WD	140 147	02/07→ 01/10→		Disc Brake;		**24.3727-2118.2**	**582118**	L= 1,672
MITSUBISHI - PAJERO CLASSIC (V2_W) 07/01→								
Brake Pad Set, disc brake								
2.5 TD	85	07/01→	←	→ 01/07		**13.0460-5853.2**	**605853**	SUM 23488 15,4 + WK
3.0 3.0 ZR 3.2 DiD	131 132 125	09/06→ 08/03→ 09/06→	←	02/07→; Type: V88W		**13.0460-5853.2**	**605853**	SUM 23488 15,4 + WK
3.8 All-wheel Drive	160	06/02→	←			**13.0460-5853.2**	**605853**	SUM 23488 15,4 + WK
3.8 All-wheel Drive	184	09/06→	←	for shortened wheelbase		**13.0460-5853.2**	**605853**	SUM 23488 15,4 + WK
Cable Pull, parking brake								
3.0 3.0 ZR 3.2 DiD	131 132 125	09/06→ 08/03→ 09/06→		Disc Brake; Type: V88W;		**24.3727-2118.2**	**582118**	L= 1,672
MITSUBISHI - PAJERO PININ I (H6_W, H7_W) 01/99→06/07								
Brake Pad Set, disc brake								
3.2 DiD	118	09/99→09/06	←	10/01→ 08/06		**13.0460-5853.2**	**605853**	SUM 23488 15,4 + WK
MITSUBISHI - PAJERO SPORT II (KH_, KG_) 01/08→								
Brake Pad Set, disc brake								
2.5 DI-D 2.5 DI-D 4WD 3.0 4WD 3.2 DI-D 4WD	131 131 162 118 - 121	07/08→12/15 07/08→ 09/08→ 07/08→	←	11/09→		**13.0460-5631.2**	**605631**	24529 16,0 + WK
3.0 Mivec 3.5 V6 24V	161 153	01/12→12/15 09/08→	←			**13.0460-5631.2**	**605631**	24529 16,0 + WK
3.2 DI-D 4WD	132	11/13→12/18	←			**13.0460-5853.2**	**605853**	SUM 23488 15,4 + WK
MITSUBISHI - ZINGER MPV (KB0_A) 10/05→								
Brake Pad Set, disc brake								
2.4	94 - 100	10/05→	←			**13.0460-5631.2**	**605631**	24529 16,0 + WK
NISSAN - 100NX (B13) 03/90→01/96								
Brake Pad Set, disc brake								
2.0 GTI	105	03/91→10/94	→			**13.0460-5983.2**	**605983**	21713 16,5 - WE / - WK
NISSAN - 200SX (S13) 07/88→12/95								
Brake Pad Set, disc brake								
1.8 Turbo	124	07/88→11/93	←	09/88→ 09/91		**13.0460-5933.2**	**605933**	AKE 21725 16,8 + WK
Brake Disc								
1.8 Turbo	124	07/88→11/93	←	09/88→ 09/91		**24.0122-0146.1**	**422146**	Ø 257 Brake Disc Thickness [mm] 22 Minimum thickness [mm] 20 Vented

	kW				! #			
NISSAN - 300ZX (Z31) 01/84→10/90								
Brake Pad Set, disc brake								
3.0 3.0 Turbo	125 168	01/84→12/87 04/84→10/90	←	→ 02/87		**13.0460-5937.2**	**605937**	AKE 21119 17,0 + WK
NISSAN - ALMERA I (N15) 07/95→09/00								
Brake Pad Set, disc brake								
1.4 1.4 GX LX 1.6 1.6 SLX 2.0 D	64 55 55 73 66 55	09/95→07/00 09/95→07/00 09/95→07/00 09/95→07/00 09/95→07/00 11/95→07/00	→	01/98→ 04/00; + ABS		**13.0460-5983.2**	**605983**	21713 16,5 - WE / - WK
1.5 1.6	77 75	07/95→05/00 07/95→03/00	→	01/98→; + ABS		**13.0460-5983.2**	**605983**	21713 16,5 - WE / - WK
NISSAN - ALMERA I Hatchback (N15) 07/95→01/01								
Brake Pad Set, disc brake								
1.4 GX 1.4 S LX 1.5 1.6 1.6 SR SLX 2.0 D	64 55 55 55 77 73 66 66 55	09/95→03/00 09/95→03/00 09/95→03/00 09/95→03/00 07/95→03/00 09/95→03/00 09/95→03/00 09/95→03/00 11/95→03/00	→	01/98→; + ABS		**13.0460-5983.2**	**605983**	21713 16,5 - WE / - WK
2.0 GTi	105	07/96→03/00	→			**13.0460-5983.2**	**605983**	21713 16,5 - WE / - WK
NISSAN - ALMERA II (N16) 04/00→								
Brake Pad Set, disc brake								
1.5	66	07/00→11/06	→	→ 03/01; + ABS; Vehicle Production Country Japan		**13.0460-5983.2**	**605983**	21713 16,5 - WE / - WK
1.8 2.2 Di	84 81	07/00→11/02 07/00→04/03	→	→ 03/01; Vehicle Production Country Japan		**13.0460-5983.2**	**605983**	21713 16,5 - WE / - WK
Brake Disc								
1.5	66	07/00→11/06	←	- ABS		**24.0122-0146.1**	**422146**	Ø 257 Brake Disc Thickness [mm] 22 Minimum thickness [mm] 20 Vented
			←	→ 03/01; - ABS; Vehicle Production Country Japan		**24.0122-0146.1**	**422146**	Ø 257 Brake Disc Thickness [mm] 22 Minimum thickness [mm] 20 Vented
1.5 1.5 dCi	72 60	10/02→09/06 01/03→09/06	←	- ABS		**24.0122-0146.1**	**422146**	Ø 257 Brake Disc Thickness [mm] 22 Minimum thickness [mm] 20 Vented
NISSAN - ALMERA II Hatchback (N16) 01/00→								
Brake Pad Set, disc brake								
1.5	66	03/00→11/06	→	→ 03/01; + ABS; Vehicle Production Country Japan		**13.0460-5983.2**	**605983**	21713 16,5 - WE / - WK
1.8	84	01/00→11/02	→	03/00→ 03/01; Vehicle Production Country Japan		**13.0460-5983.2**	**605983**	21713 16,5 - WE / - WK
2.2 Di	81	03/00→04/03	→	→ 03/01; Vehicle Production Country Japan		**13.0460-5983.2**	**605983**	21713 16,5 - WE / - WK
Brake Disc								
1.5	66	03/00→11/06	←	- ABS		**24.0122-0146.1**	**422146**	Ø 257 Brake Disc Thickness [mm] 22 Minimum thickness [mm] 20 Vented
			←	→ 03/01; - ABS; Vehicle Production Country Japan		**24.0122-0146.1**	**422146**	Ø 257 Brake Disc Thickness [mm] 22 Minimum thickness [mm] 20 Vented
1.5 1.5 dCi	72 60	10/02→09/06 01/03→09/06	←	- ABS		**24.0122-0146.1**	**422146**	Ø 257 Brake Disc Thickness [mm] 22 Minimum thickness [mm] 20 Vented

© 2022 Continental Aftermarket & Services GmbH

	kW				! #			
NISSAN - ALTIMA (L30) 06/97→08/01								
Brake Pad Set, disc brake								
2.4	112	06/97→08/01	➡			**13.0460-5983.2**	**605983**	21713 16,5 - WE / - WK
Brake Disc								
2.4	112	06/97→08/01	➡			**24.0109-0129.1**	**409129**	Ø 258 Brake Disc Thickness [mm] 9 Minimum thickness [mm] 8
NISSAN - ALTIMA (L31) 08/01→04/07								
Brake Pad Set, disc brake								
2.5	130	08/01→12/06	⬅			**13.0460-5716.2**	**605716**	21561 17,0 + WK
NISSAN - AVENIR (W11) 11/97→03/06								
Brake Pad Set, disc brake								
1.8 2.0 4x4	92 107	11/97→12/05 11/97→12/05	⬅			**13.0460-5716.2**	**605716**	21561 17,0 + WK
Wheel Brake Cylinder								
1.8 2.0 4x4	92 107	11/97→12/05 11/97→12/05	➡	→ 04/00		**24.3220-1703.3**	**020391**	GG
NISSAN - BLUEBIRD (T72 , T12, U12) 12/85→12/90								
Brake Pad Set, disc brake								
1.6 2.0 D 2.0 i	61 49 77	03/86→06/90 03/86→12/90 12/85→12/90	⬅	09/88→ 04/90		**13.0460-5937.2**	**605937**	AKE 21119 17,0 + WK
			⬅	→ 02/90		**13.0460-5937.2**	**605937**	AKE 21119 17,0 + WK
1.8	61	05/86→09/90	⬅	02/88→ 11/88		**13.0460-5937.2**	**605937**	AKE 21119 17,0 + WK
1.8 Turbo	99	12/85→05/90	⬅	09/88→ 04/90		**13.0460-5937.2**	**605937**	AKE 21119 17,0 + WK
			⬅	→ 01/89		**13.0460-5937.2**	**605937**	AKE 21119 17,0 + WK
2.0	75	12/85→12/87	⬅			**13.0460-5937.2**	**605937**	AKE 21119 17,0 + WK
2.0 i	85	09/88→09/90	⬅	→ 04/90		**13.0460-5937.2**	**605937**	AKE 21119 17,0 + WK
			⬅	→ 02/90		**13.0460-5937.2**	**605937**	AKE 21119 17,0 + WK
Wheel Brake Cylinder								
1.6	61	03/86→06/90	➡	07/89→ 04/90	2	**24.3220-1703.3**	**020391**	GG
1.8	61	05/86→09/90	➡	02/88→ 02/90	2	**24.3220-1703.3**	**020391**	GG
1.8 i 16V	95	02/89→12/90	➡	→ 02/90	2	**24.3220-1703.3**	**020391**	GG
2.0	75	12/85→12/87	➡		2	**24.3220-1703.3**	**020391**	GG
2.0 D 2.0 i	49 77 - 85	03/86→12/90 12/85→12/90	➡	07/89→ 04/90	2	**24.3220-1703.3**	**020391**	GG
			➡	→ 02/90	2	**24.3220-1703.3**	**020391**	GG
NISSAN - BLUEBIRD (U11) 11/83→05/90								
Brake Pad Set, disc brake								
1.8 2.0 D 2.0 i 2.0 TD	66 43 77 62	11/83→06/88 04/84→01/88 04/84→01/88 11/83→12/85	⬅			**13.0460-5937.2**	**605937**	AKE 21119 17,0 + WK
1.8 Turbo	99	04/84→05/90	⬅	→ 09/89		**13.0460-5937.2**	**605937**	AKE 21119 17,0 + WK
Wheel Brake Cylinder								
2.0 D 2.0 i 2.0 TD	43 77 62	04/84→01/88 04/84→01/88 11/83→12/85	➡		2	**24.3220-1703.3**	**020391**	GG
NISSAN - BLUEBIRD (U13, U14) 09/91→05/02								
Brake Pad Set, disc brake								
2.0 D	56	04/97→05/02	⬅			**13.0460-5933.2**	**605933**	AKE 21725 16,8 + WK
			➡			**13.0460-5983.2**	**605983**	21713 16,5 - WE / - WK
Brake Disc								
2.0 D	56	04/97→05/02	⬅	→ 04/00		**24.0122-0146.1**	**422146**	Ø 257 Brake Disc Thickness [mm] 22 Minimum thickness [mm] 20 Vented

	kW				! #			
NISSAN - BLUEBIRD (U13, U14) 09/91→05/02								
Brake Disc								
2.0 D	56	04/97→05/02	➡			**24.0109-0129.1**	**409129**	Ø 258 Brake Disc Thickness [mm] 9 Minimum thickness [mm] 8
NISSAN - BLUEBIRD Hatchback (T72, T12) 12/85→11/92								
Brake Pad Set, disc brake								
1.6	61 - 66	03/86→06/91	⬅	09/88→ 04/90		**13.0460-5937.2**	**605937**	AKE 21119 17,0 + WK
2.0 D 2.0 i	49 77	03/86→12/90 12/85→12/90	⬅	→ 02/90		**13.0460-5937.2**	**605937**	AKE 21119 17,0 + WK
1.8 Turbo	99	12/85→11/92	⬅	09/88→ 04/90		**13.0460-5937.2**	**605937**	AKE 21119 17,0 + WK
			⬅	→ 01/89		**13.0460-5937.2**	**605937**	AKE 21119 17,0 + WK
2.0	75	12/85→12/87	⬅			**13.0460-5937.2**	**605937**	AKE 21119 17,0 + WK
2.0 i	85	09/88→09/90	⬅	→ 02/90		**13.0460-5937.2**	**605937**	AKE 21119 17,0 + WK
			⬅	→ 04/90		**13.0460-5937.2**	**605937**	AKE 21119 17,0 + WK
Wheel Brake Cylinder								
1.6	61 - 66	03/86→06/91	➡	07/89→ 04/90	2	**24.3220-1703.3**	**020391**	GG
1.8 i 16V	95	02/89→12/90	➡	→ 02/90	2	**24.3220-1703.3**	**020391**	GG
2.0	75	12/85→12/87	➡		2	**24.3220-1703.3**	**020391**	GG
2.0 D 2.0 i	49 77 - 85	03/86→12/90 12/85→12/90	➡	07/89→ 04/90	2	**24.3220-1703.3**	**020391**	GG
			➡	→ 02/90	2	**24.3220-1703.3**	**020391**	GG
NISSAN - BLUEBIRD Station Wagon (WU11) 11/83→12/90								
Brake Pad Set, disc brake								
2.0 2.0 D 2.0 i	75 49 77 - 85	04/86→09/90 03/86→12/90 04/84→12/90	⬅	→ 09/89		**13.0460-5937.2**	**605937**	AKE 21119 17,0 + WK
2.0 D	43	04/84→01/88	⬅			**13.0460-5937.2**	**605937**	AKE 21119 17,0 + WK
Wheel Brake Cylinder								
2.0 2.0 D 2.0 i	75 49 77 - 85	04/86→09/90 03/86→12/90 04/84→12/90	➡	→ 05/90	2	**24.3220-1703.3**	**020391**	GG
2.0 D	43	04/84→01/88	➡		2	**24.3220-1703.3**	**020391**	GG
NISSAN - BLUEBIRD SYLPHY / SYLPHY III (B17) 07/12→								
Brake Pad Set, disc brake								
1.6	86	05/13→	⬅			**13.0460-5716.2**	**605716**	21561 17,0 + WK
NISSAN - CEDRIC X (Y34) 05/99→08/04								
Brake Pad Set, disc brake								
2.5	147	05/00→08/04	⬅			**13.0460-5880.2**	**605880**	23184 14,8 + WK
3.0 Ultima	206	08/00→08/04	⬅			**13.0460-5778.2**	**605778**	SUM 23698 16,8 + WK
NISSAN - CEFIRO III Saloon (A33) 01/99→12/07								
Brake Pad Set, disc brake								
2.0 3.0	103 147	01/00→09/03 01/00→09/03	⬅	→ 08/03		**13.0460-5880.2**	**605880**	23184 14,8 + WK
NISSAN - CUBE (Z12) 09/07→								
Brake Pad Set, disc brake								
1.5 dCi 1.6 16V	78 81	10/09→ 08/09→	⬅	→ 03/11		**13.0460-5716.2**	**605716**	21561 17,0 + WK
1.5 dCi 1.8	81 91	03/10→ 09/09→	⬅			**13.0460-5716.2**	**605716**	21561 17,0 + WK
NISSAN - DATSUN 140Y Estate (HLB310) 02/79→06/83								
Wheel Brake Cylinder								
1.4	49	02/79→06/83	➡	→ 05/82	2	**24.3220-1703.3**	**020391**	GG

© 2022 Continental Aftermarket & Services GmbH

	kW				! #			
NISSAN - DATSUN 160J (710, A10) 01/73→09/83								
Wheel Brake Cylinder								
1.6	61	01/73→02/82	➡	06/77→ 05/81	2	**24.3220-1703.3**	**020391**	GG
1.6 i.e.	65	01/78→02/82	➡	→ 05/81	2	**24.3220-1703.3**	**020391**	GG
NISSAN - DATSUN 180B (PL810) 05/77→01/81								
Wheel Brake Cylinder								
1.8	65 - 66	05/77→01/81	➡	10/77→ 12/79	2	**24.3220-1703.3**	**020391**	GG
NISSAN - ELGRAND (E50) 10/95→04/02								
Brake Pad Set, disc brake								
3.0 D	125	08/99→04/02	⬅			**13.0460-5842.2**	**605842**	23420 16,5 - WE / - WK
3.0 D AWD	113	08/99→08/00						
3.2 D	110	10/95→08/01						
3.2 D 4x4	110	10/95→08/01						
3.3	125	04/96→04/02						
3.3 4x4	125	04/96→08/01						
3.5 AWD	177	08/00→04/02						
NISSAN - ELGRAND (E51) 08/00→12/10								
Brake Pad Set, disc brake								
2.5	137	12/04→12/10	⬅			**13.0460-5842.2**	**605842**	23420 16,5 - WE / - WK
2.5 AWD	137	12/04→12/10						
3.5	177	05/02→12/10						
3.5 AWD	177	05/02→12/10						
Brake Disc								
2.5	137	12/04→12/10	➡			**24.0116-0122.1**	**416122**	Ø 308
2.5 AWD	137	12/04→12/10						Brake Disc Thickness [mm] 16
3.5	177	05/02→12/10						Minimum thickness [mm] 14
3.5 AWD	177	05/02→12/10						Vented
NISSAN - ELGRAND (E52) 09/10→								
Brake Disc								
3.5	194	09/10→	➡			**24.0116-0122.1**	**416122**	Ø 308
								Brake Disc Thickness [mm] 16
								Minimum thickness [mm] 14
								Vented
NISSAN - JUKE (F15) 06/10→								
Brake Pad Set, disc brake								
1.2 DIG-T	85	05/14→	⬅			**13.0460-5716.2**	**605716**	21561 17,0 + WK
1.5 dCi	81	06/10→						
1.6	69 - 86	06/10→						
1.6 CVTC	72	08/14→						
1.6 DIG-T	140	06/10→						
1.6 DIG-T 4x4	140	06/10→						
1.6 DIG-T NISMO	147	03/13→07/14						
1.6 DIG-T NISMO 4x4	147	02/13→07/14						
1.6 LPG	80 - 85	01/12→						
NISSAN - JUKE (F16_) 08/19→								
Brake Pad Set, disc brake								
1.0	84	08/19→	⬅			**13.0460-7266.2**	**607266**	ATE 24538 17,9 - WE / - WK
DIG-T 117	86	08/19→				**13.0470-7266.2**	**LD7266**	ATE 24538 17,9 - WE / - WK
								Ceramic
NISSAN - JUKE Van (F15) 06/10→								
Brake Pad Set, disc brake								
1.6	140	03/13→	⬅			**13.0460-5716.2**	**605716**	21561 17,0 + WK
CVTC	86	03/13→						
dCi	81	06/10→						
NISSAN - KUBISTAR Van (X76) 08/03→								
Accessory Kit, brake shoes								
1.2	44	08/03→	➡	→ 08/05; for increased payload		**03.0137-9228.2**	**669228**	BDX
1.5 dCi	42 - 60	08/03→						
1.2 16V	55	04/06→	➡	→ 10/09; for increased payload		**03.0137-9228.2**	**669228**	BDX
1.4	55	08/03→10/09	➡	for increased payload		**03.0137-9228.2**	**669228**	BDX

	kW				! #			
NISSAN - KUBISTAR Van (X76) 08/03→								
Accessory Kit, brake shoes								
1.5 dCi 70 1.6 16V dCi 85	50 70 62	09/05→10/09 08/03→10/09 04/06→10/09	➡	for increased payload		**03.0137-9228.2**	**669228**	BDX
1.5 dCi	45	08/05→10/09	➡	09/05→; for increased payload		**03.0137-9228.2**	**669228**	BDX
NISSAN - LAUREL (JC32) 11/84→06/90								
Brake Pad Set, disc brake								
2.4 2.8 D	94 62 - 66	01/85→12/87 01/85→12/89	⬅			**13.0460-5937.2**	**605937**	AKE 21119 17,0 + WK
NISSAN - MAXIMA / MAXIMA QX IV (A32) 03/94→08/00								
Brake Pad Set, disc brake								
2.0 2.5 V6 24V 3.0	103 140 142	02/95→08/00 02/95→08/00 01/95→08/00	➡	→ 12/99		**13.0460-5983.2**	**605983**	21713 16,5 - WE / - WK
3.0	142	03/94→03/99	➡	10/94→		**13.0460-5983.2**	**605983**	21713 16,5 - WE / - WK
NISSAN - MAXIMA / MAXIMA QX IV Station Wagon (A32) 10/97→12/00								
Brake Pad Set, disc brake								
2.0 QX 2.5 V6 24V 3.0 QX	103 140 142	10/97→12/00 10/97→12/00 10/97→12/00	➡	→ 12/99		**13.0460-5983.2**	**605983**	21713 16,5 - WE / - WK
NISSAN - MAXIMA / MAXIMA QX V (A33) 04/99→11/03								
Brake Pad Set, disc brake								
2.0 V6 24V 2.5 V6 24V 3.0 V6 24V 3.5	103 154 147 188 - 190	03/00→11/03 03/00→11/03 03/00→11/03 08/01→11/03	⬅			**13.0460-5880.2**	**605880**	23184 14,8 + WK
NISSAN - MURANO I (Z50) 04/02→12/09								
Brake Pad Set, disc brake								
2.5 3.5 3.5 4x4	120 172 - 180 180	11/04→10/07 08/03→10/07 11/04→06/08	⬅			**13.0460-5778.2**	**605778**	SUM 23698 16,8 + WK
3.5 4x4	170 - 172	08/03→09/08	⬅	→ 06/08		**13.0460-5778.2**	**605778**	SUM 23698 16,8 + WK
Brake Disc								
2.5 3.5 3.5 4x4	120 172 - 180 180	11/04→10/07 08/03→10/07 11/04→06/08	➡			**24.0116-0122.1**	**416122**	Ø 308 Brake Disc Thickness [mm] 16 Minimum thickness [mm] 14 Vented
3.5 4x4	170 - 172	08/03→09/08	➡	→ 06/08		**24.0116-0122.1**	**416122**	Ø 308 Brake Disc Thickness [mm] 16 Minimum thickness [mm] 14 Vented
NISSAN - MURANO II (Z51) 10/07→09/14								
Brake Pad Set, disc brake								
2.5 2.5 4x4 2.5 dCi 4x4 3.5 3.5 4x4	125 125 140 191 - 195 183 - 198	09/08→09/14 09/08→09/14 01/10→09/14 11/07→09/14 11/07→09/14	⬅			**13.0460-5778.2**	**605778**	SUM 23698 16,8 + WK
Brake Disc								
2.5 2.5 4x4 2.5 dCi 4x4 3.5 3.5 4x4	125 125 140 191 - 195 183 - 198	09/08→09/14 09/08→09/14 01/10→09/14 11/07→09/14 11/07→09/14	➡			**24.0116-0122.1**	**416122**	Ø 308 Brake Disc Thickness [mm] 16 Minimum thickness [mm] 14 Vented
NISSAN - MURANO II VAN (Z51) 10/07→09/14								
Brake Pad Set, disc brake								
2.5 dCi 4x4	140	03/13→09/14	⬅			**13.0460-5778.2**	**605778**	SUM 23698 16,8 + WK

© 2022 Continental Aftermarket & Services GmbH

	kW				! #			
NISSAN - MURANO II VAN (Z51) 10/07→09/14								
Brake Pad Set, disc brake								
3.5 CVTC 4x4	188	03/13→09/14	←			**13.0460-5778.2**	**605778**	SUM 23698 16,8 + WK
Brake Disc								
2.5 dCi 4x4 3.5 CVTC 4x4	140 188	03/13→09/14 03/13→09/14	→			**24.0116-0122.1**	**416122**	Ø 308 Brake Disc Thickness [mm] 16 Minimum thickness [mm] 14 Vented
NISSAN - NAVARA (D21) 09/85→03/08								
Brake Pad Set, disc brake								
2.0 2.5 D 4x4	66 55	01/86→08/91 01/86→08/87	←			**13.0460-5937.2**	**605937**	AKE 21119 17,0 + WK
2.5 D 4x4	59	01/86→03/08	←	→ 02/98		**13.0460-5937.2**	**605937**	AKE 21119 17,0 + WK
NISSAN - NAVARA (D22) 01/97→								
Brake Pad Set, disc brake								
2.4 4x4	110	09/97→09/04	←			**13.0460-5937.2**	**605937**	AKE 21119 17,0 + WK
NISSAN - NP300 NAVARA (D40) 10/04→								
Brake Pad Set, disc brake								
2.5 D 4WD 2.5 dCi 2.5 dCi 4WD 2.5 dCi 4x4 4.0 4.0 4WD	98 106 - 128 106 - 140 120 198 198	09/08→ 07/05→ 07/05→ 02/12→12/16 10/04→11/09 10/04→	←	Brake Size: 17"		**13.0460-5778.2**	**605778**	SUM 23698 16,8 + WK
3.0 dCi 4WD	170	02/10→	←			**13.0460-5778.2**	**605778**	SUM 23698 16,8 + WK
NISSAN - NP300 NAVARA Pickup (D23) 07/14→								
Brake Pad Set, disc brake								
2.3 dCi 2.3 dCi 4x4 2.5 dCi 2.5 dCi 4x4	120 - 140 116 - 140 120 120 - 140	01/15→ 01/15→ 07/14→ 07/14→	←	05/19→		**13.0460-3887.2**	**603887**	+ WK + Zub
NISSAN - NP300 NAVARA Platform/Chassis (D40) 07/08→								
Brake Pad Set, disc brake								
2.5 dCi 2.5 dCi 4WD	140 126	03/10→ 08/08→	←	Brake Size: 17"		**13.0460-5778.2**	**605778**	SUM 23698 16,8 + WK
2.5 dCi 4WD	106	08/08→	←	10/08→; Brake Size: 17"		**13.0460-5778.2**	**605778**	SUM 23698 16,8 + WK
3.0 dCi	170	03/10→	←			**13.0460-5778.2**	**605778**	SUM 23698 16,8 + WK
NISSAN - PATHFINDER III (R51) 01/05→								
Brake Pad Set, disc brake								
2.5 dCi 2.5 dCi 4WD 3.0 dCi 4.0 4WD	128 120 - 140 170 198	01/05→ 01/05→ 08/10→ 09/05→	←	Brake Size: 17"		**13.0460-5778.2**	**605778**	SUM 23698 16,8 + WK
4.0	214	01/10→08/14	←	Rim Size [in]: 17		**13.0460-5778.2**	**605778**	SUM 23698 16,8 + WK
NISSAN - PATHFINDER III VAN (R51_) 01/05→								
Brake Shoe Set								
3.0 dCi 4x4	170	03/13→08/14	→			**03.0137-0273.2**	**650273**	AP Ø 185 Width [mm] 31
NISSAN - PICK UP (720) 01/80→03/86								
Brake Pad Set, disc brake								
1.8 2.2 4WD 2.3 D 2.5 D 4WD	59 71 51 53	01/83→03/86 04/83→03/86 04/83→03/86 04/83→03/86	←	→ 09/85		**13.0460-5937.2**	**605937**	AKE 21119 17,0 + WK

	kW				! #			
NISSAN - PICK UP (D21) 09/85→12/08								
Brake Pad Set, disc brake								
2.0 2.3 D 2.4 4WD 2.4 i 12V 4WD 2.5 D 2.5 D 4WD	64 - 66 51 74 93 55 - 61 53 - 61	09/85→12/97 09/85→08/88 03/86→04/92 04/92→02/98 09/87→02/98 09/85→02/98	←			**13.0460-5937.2**	**605937**	AKE 21119 17,0 + WK
NISSAN - PRAIRIE (M10, NM10) 12/82→10/88								
Brake Pad Set, disc brake								
2.0 4x4	68 - 77	01/86→09/88	←			**13.0460-5937.2**	**605937**	AKE 21119 17,0 + WK
NISSAN - PRAIRIE PRO (M11) 10/88→10/98								
Brake Pad Set, disc brake								
2.0 i 2.0 i 4x4	72 72	10/88→04/92 10/88→12/92	←	→ 03/92		**13.0460-5933.2**	**605933**	AKE 21725 16,8 + WK
2.4 i 2.4 i 4x4	98 98	01/90→07/94 04/92→07/94	←			**13.0460-5933.2**	**605933**	AKE 21725 16,8 + WK
Brake Disc								
2.0 i 2.0 i 4x4	72 72	10/88→04/92 10/88→12/92	←	→ 03/92		**24.0122-0146.1**	**422146**	Ø 257 Brake Disc Thickness [mm] 22 Minimum thickness [mm] 20 Vented
Wheel Brake Cylinder								
2.0 i	72	10/88→04/92	→	→ 03/92	2	**24.3220-1703.3**	**020391**	GG
NISSAN - PRIMERA (P10) 06/90→06/96								
Brake Disc								
1.6	66 - 71	06/90→01/96	←	05/93→; + ABS		**24.0122-0146.1**	**422146**	Ø 257 Brake Disc Thickness [mm] 22 Minimum thickness [mm] 20 Vented
1.6	75	06/93→01/96	←	+ ABS		**24.0122-0146.1**	**422146**	Ø 257 Brake Disc Thickness [mm] 22 Minimum thickness [mm] 20 Vented
2.0 2.0 i	96 92	06/90→05/96 01/95→06/96	←	→ 01/96		**24.0122-0146.1**	**422146**	Ø 257 Brake Disc Thickness [mm] 22 Minimum thickness [mm] 20 Vented
2.0 16V 2.0 16V 4x4 2.0 4x4 2.0 GT	85 85 110 110	06/90→01/96 04/91→06/96 03/91→04/93 06/90→01/96	←			**24.0122-0146.1**	**422146**	Ø 257 Brake Disc Thickness [mm] 22 Minimum thickness [mm] 20 Vented
2.0 D	55	01/91→01/96	←	05/93→		**24.0122-0146.1**	**422146**	Ø 257 Brake Disc Thickness [mm] 22 Minimum thickness [mm] 20 Vented
NISSAN - PRIMERA (P11) 06/96→12/01								
Brake Disc								
1.6 16V 2.0 16V 2.0 TD	66 - 78 85 - 96 66	06/96→12/01 09/96→12/01 09/96→12/01	←	→ 05/99		**24.0122-0146.1**	**422146**	Ø 257 Brake Disc Thickness [mm] 22 Minimum thickness [mm] 20 Vented
Accessory Kit, brake shoes								
1.6 16V 2.0 TD	66 - 78 66	06/96→12/01 09/96→12/01	→			**03.0137-9228.2**	**669228**	BDX
NISSAN - PRIMERA (P12) 01/02→								
Guide Bolt, brake caliper								
1.6 1.8 1.8 LPG 1.9 dCi 2.0	78 85 85 88 103	03/02→08/08 03/02→10/08 03/02→ 04/03→10/07 03/02→10/08			2	**11.8171-0008.1**	**990049**	ATE

© 2022 Continental Aftermarket & Services GmbH

	kW				! #			
NISSAN - PRIMERA (P12) 01/02→								
Guide Bolt, brake caliper								
2.2 dCi	102	04/03→04/06			2	**11.8171-0008.1**	**990049**	ATE
1.6	80	01/02→04/06		03/02→	2	**11.8171-0008.1**	**990049**	ATE
1.9 dCi	85	08/02→10/07		04/03→	2	**11.8171-0008.1**	**990049**	ATE
2.2 Di	93	03/02→05/07		→ 04/03	2	**11.8171-0008.1**	**990049**	ATE
NISSAN - PRIMERA Estate (WP12) 01/02→								
Guide Bolt, brake caliper								
1.6 Visia	80	01/02→04/06		03/02→	2	**11.8171-0008.1**	**990049**	ATE
1.8 2.2 Di	85 93	03/02→05/07 03/02→04/03			2	**11.8171-0008.1**	**990049**	ATE
1.9 dCi	85	08/02→10/07		04/03→	2	**11.8171-0008.1**	**990049**	ATE
1.9 dCi 2.2 dCi	88 102	04/03→ 04/03→		→ 10/07	2	**11.8171-0008.1**	**990049**	ATE
2.0	103	03/02→		→ 10/08	2	**11.8171-0008.1**	**990049**	ATE
NISSAN - PRIMERA Hatchback (P10) 06/90→06/96								
Brake Disc								
1.6	66 - 71	06/90→01/96	←	05/93→; + ABS		**24.0122-0146.1**	**422146**	Ø 257 Brake Disc Thickness [mm] 22 Minimum thickness [mm] 20 Vented
1.6	75	06/93→01/96	←	+ ABS		**24.0122-0146.1**	**422146**	Ø 257 Brake Disc Thickness [mm] 22 Minimum thickness [mm] 20 Vented
2.0 2.0 16V 2.0 16V 4x4	110 - 112 85 85	06/90→01/96 06/90→01/96 04/91→06/96	←			**24.0122-0146.1**	**422146**	Ø 257 Brake Disc Thickness [mm] 22 Minimum thickness [mm] 20 Vented
2.0 D	55	01/91→01/96	←	05/93→		**24.0122-0146.1**	**422146**	Ø 257 Brake Disc Thickness [mm] 22 Minimum thickness [mm] 20 Vented
2.0 i	92	01/95→06/96	←	→ 01/96		**24.0122-0146.1**	**422146**	Ø 257 Brake Disc Thickness [mm] 22 Minimum thickness [mm] 20 Vented
NISSAN - PRIMERA Hatchback (P11) 06/96→07/02								
Brake Disc								
1.6 16V 2.0 16V 2.0 16V LPG 2.0 TD	66 - 73 85 - 96 96 66	09/96→07/02 09/96→07/02 09/96→07/02 09/96→07/02	←	→ 05/99		**24.0122-0146.1**	**422146**	Ø 257 Brake Disc Thickness [mm] 22 Minimum thickness [mm] 20 Vented
1.6 16V LPG	78	09/00→07/02	←	- ABS		**24.0122-0146.1**	**422146**	Ø 257 Brake Disc Thickness [mm] 22 Minimum thickness [mm] 20 Vented
Accessory Kit, brake shoes								
1.6 16V 1.6 16V LPG 2.0 TD	66 - 78 78 66	09/96→07/02 09/00→07/02 09/96→07/02	→	→ 02/02		**03.0137-9228.2**	**669228**	BDX
NISSAN - PRIMERA Hatchback (P12) 01/02→								
Guide Bolt, brake caliper								
1.6 1.8 1.9 dCi 2.0	78 - 80 85 88 103	07/02→08/08 07/02→10/08 04/03→10/07 07/02→10/08			2	**11.8171-0008.1**	**990049**	ATE
1.9 dCi	85	08/02→10/07		04/03→	2	**11.8171-0008.1**	**990049**	ATE
2.2 dCi	102	04/03→		→ 10/07	2	**11.8171-0008.1**	**990049**	ATE
2.2 Di	93	07/02→05/07		→ 04/03	2	**11.8171-0008.1**	**990049**	ATE
NISSAN - PRIMERA Traveller (W10) 07/90→03/98								
Brake Pad Set, disc brake								
1.6 i	66 - 75	07/90→03/98	←			**13.0460-5933.2**	**605933**	AKE 21725 16,8 + WK
2.0 D	55	07/90→12/95	→	+ ABS		**13.0460-5983.2**	**605983**	21713 16,5 - WE / - WK

	kW				! #			
NISSAN - PRIMERA Traveller (W10) 07/90→03/98								
Brake Pad Set, disc brake								
2.0 i	85	07/90→03/98	←	→ 12/95		**13.0460-5933.2**	**605933**	AKE 21725 16,8 + WK
			→	→ 12/95		**13.0460-5983.2**	**605983**	21713 16,5 - WE / - WK
Brake Disc								
1.6 i 2.0 D	66 - 75 55	07/90→03/98 07/90→12/95	←			**24.0122-0146.1**	**422146**	Ø 257 Brake Disc Thickness [mm] 22 Minimum thickness [mm] 20 Vented
			→	+ ABS		**24.0109-0129.1**	**409129**	Ø 258 Brake Disc Thickness [mm] 9 Minimum thickness [mm] 8
2.0 i	85	07/90→03/98	←	→ 12/95		**24.0122-0146.1**	**422146**	Ø 257 Brake Disc Thickness [mm] 22 Minimum thickness [mm] 20 Vented
			→	→ 12/95		**24.0109-0129.1**	**409129**	Ø 258 Brake Disc Thickness [mm] 9 Minimum thickness [mm] 8
Wheel Brake Cylinder								
1.6 i 2.0 D	66 - 75 55	07/90→03/98 07/90→12/95	→	- ABS	2	**24.3220-1703.3**	**020391**	GG
NISSAN - PRIMERA Traveller (WP11) 06/96→01/02								
Guide Bolt, brake caliper								
2.0 16V	85 - 96	06/96→12/01		07/99→	2	**11.8171-0008.1**	**990049**	ATE
2.0 16V	103	08/99→12/01			2	**11.8171-0008.1**	**990049**	ATE
NISSAN - PULSAR Hatchback (C13) 08/12→								
Brake Pad Set, disc brake								
1.2 DIG-T 1.5 dCi 1.6 DIG-T	85 81 140	10/14→ 10/14→ 02/15→	←			**13.0460-5716.2**	**605716**	21561 17,0 + WK
NISSAN - QASHQAI / QASHQAI +2 I (J10, NJ10, JJ10E) 12/06→04/14								
Brake Caliper								
1.5 dCi	76 - 81	02/07→12/13	→	for extended wheelbase; ◪		**24.3431-1721.5**	**241425**	without holder
1.6 1.6 dCi 1.6 dCi All-wheel Drive 1.6 LPG 2.0 2.0 All-wheel Drive 2.0 dCi 2.0 dCi All-wheel Drive	81 - 86 96 96 86 104 104 110 110	02/07→12/13 10/11→12/13 10/11→12/13 11/10→12/13 02/07→12/13 02/07→12/13 02/07→12/13 02/07→12/13	→	for extended wheelbase; ◪		**24.3431-1722.5**	**241426**	without holder
2.0 2.0 All-wheel Drive	103 103	01/10→04/14 01/10→04/14	→	◪		**24.3431-1721.5**	**241425**	without holder
			→	◪		**24.3431-1722.5**	**241426**	without holder
Brake Pad Set, disc brake								
1.6 1.6 dCi 1.6 dCi All-wheel Drive 1.6 LPG 2.0 2.0 All-wheel Drive 2.0 dCi 2.0 dCi All-wheel Drive	86 96 96 86 102 - 104 102 - 104 110 110	11/10→12/13 10/11→12/13 10/11→12/13 11/10→12/13 02/07→12/13 02/07→12/13 02/07→12/13 02/07→12/13	←	for extended wheelbase		**13.0460-5778.2**	**605778**	SUM 23698 16,8 + WK
2.0 2.0 All-wheel Drive	103 103	01/10→04/14 01/10→04/14	←			**13.0460-5778.2**	**605778**	SUM 23698 16,8 + WK
NISSAN - QASHQAI / QASHQAI +2 I VAN (J10, JJ10E) 12/06→04/14								
Brake Caliper								
1.5 dCi 1.6 CVTC 1.6 dCi 1.6 dCi All-wheel Drive 2.0 2.0 All-wheel Drive	81 86 96 96 104 104	03/13→04/14 03/13→04/14 03/13→04/14 03/13→04/14 03/13→04/14 03/13→04/14	→	for extended wheelbase; ◪		**24.3431-1721.5**	**241425**	without holder
			→	for extended wheelbase; ◪		**24.3431-1722.5**	**241426**	without holder

© 2022 Continental Aftermarket & Services GmbH

	kW				! #			
NISSAN - QASHQAI / QASHQAI +2 I VAN (J10, JJ10E) 12/06→04/14								
Brake Caliper								
2.0 dCi All-wheel Drive	110	03/13→04/14	➡	for extended wheelbase;		**24.3431-1721.5**	**241425**	without holder
			➡	for extended wheelbase;		**24.3431-1722.5**	**241426**	without holder
Brake Pad Set, disc brake								
1.6 CVTC 1.6 dCi 1.6 dCi All-wheel Drive 2.0 2.0 All-wheel Drive 2.0 dCi All-wheel Drive	86 96 96 104 104 110	03/13→04/14 03/13→04/14 03/13→04/14 03/13→04/14 03/13→04/14 03/13→04/14	⬅	for extended wheelbase		**13.0460-5778.2**	**605778**	SUM 23698 16,8 + WK
NISSAN - QASHQAI II SUV (J11, J11_) 11/13→								
Brake Master Cylinder								
1.2 DIG-T 1.5 dCi 1.6 dCi 1.6 dCi ALL MODE 4x4-i	85 81 96 96	11/13→ 11/13→ 11/13→ 11/13→		02/14→		**24.4123-1728.3**	**011089**	Ø 23.8 without brake fluid reservoir
1.3 DIG-T 1.5 dCi 1.7 dCi	103 - 118 85 110	08/18→ 06/18→ 01/19→		for right-hand drive vehicles		**24.4123-1728.3**	**011089**	Ø 23.8 without brake fluid reservoir
1.6 DIG-T	120	10/14→				**24.4123-1728.3**	**011089**	Ø 23.8 without brake fluid reservoir
1.7 dCi ALL MODE 4x4-i	110	01/19→		for right-hand drive vehicles; Manual Transmission		**24.4123-1728.3**	**011089**	Ø 23.8 without brake fluid reservoir
2.0	103 - 106	06/14→		for left-hand drive vehicles; Manual Transmission		**24.4123-1728.3**	**011089**	Ø 23.8 without brake fluid reservoir
Brake Caliper								
1.2 DIG-T 1.3 DIG-T 1.5 dCi 1.6 dCi 1.6 dCi ALL MODE 4x4-i 1.6 DIG-T 1.7 dCi 2.0 2.0 ALL MODE 4x4-i	85 103 - 118 85 96 96 120 110 103 - 106 103 - 106	11/13→ 08/18→ 06/18→ 11/13→ 11/13→ 10/14→ 01/19→ 06/14→ 01/15→	⬅ ⬅			**24.3571-1799.5** **24.3571-1800.5**	**241385** **241386**	without holder without holder
1.5 dCi	81	11/13→	⬅			**24.3571-1799.5**	**241385**	without holder
			⬅			**24.3571-1800.5**	**241386**	without holder
			➡	→ 01/14; for extended wheelbase;		**24.3431-1721.5**	**241425**	without holder
			➡	→ 01/14; for extended wheelbase;		**24.3431-1722.5**	**241426**	without holder
NISSAN - QASHQAI II VAN (J11_) 11/13→								
Brake Master Cylinder								
1.5 dCi	81 - 85	05/15→		for right-hand drive vehicles		**24.4123-1728.3**	**011089**	Ø 23.8 without brake fluid reservoir
Brake Caliper								
1.5 dCi	81 - 85	05/15→	⬅			**24.3571-1799.5**	**241385**	without holder
			⬅			**24.3571-1800.5**	**241386**	without holder
NISSAN - QUEST (E52) 09/09→								
Brake Disc								
3.5 V6	194	02/12→	➡			**24.0116-0122.1**	**416122**	Ø 308 Brake Disc Thickness [mm] 16 Minimum thickness [mm] 14 Vented
NISSAN - SENTRA V (B15) 07/98→12/07								
Brake Pad Set, disc brake								
1.8	93	01/00→08/06	⬅			**13.0460-5933.2**	**605933**	AKE 21725 16,8 + WK
NISSAN - SENTRA VII (B17) 08/12→								
Brake Pad Set, disc brake								
1.6 1.8	86 96	08/14→ 08/12→	⬅			**13.0460-5716.2**	**605716**	21561 17,0 + WK

	kW				! #			
NISSAN - SERENA (C24) 06/99→12/13								
Brake Pad Set, disc brake								
2.0 SGX 4x4 2.5 DCi SGX 2.5 DCi SGX 4x4	107 110 110	09/00→09/05 06/99→09/05 06/99→09/05	←			**13.0460-5842.2**	**605842**	23420 16,5 - WE / - WK
NISSAN - SILVIA (S12) 06/83→12/88								
Brake Pad Set, disc brake								
2.0 GP	107	04/84→09/88	←	→ 05/88		**13.0460-5937.2**	**605937**	AKE 21119 17,0 + WK
NISSAN - SKYLINE (V36) 12/06→12/14								
Brake Pad Set, disc brake								
370GT	243	12/08→12/14	←			**13.0460-5778.2**	**605778**	SUM 23698 16,8 + WK
NISSAN - SUNNY (140Y, 150Y) 01/70→02/82								
Wheel Brake Cylinder								
1.4	48	01/70→02/82	→	09/78→	2	**24.3220-1703.3**	**020391**	GG
1.4 1.5	49 51	06/79→02/82 06/79→02/82	→		2	**24.3220-1703.3**	**020391**	GG
NISSAN - SUNNY III Hatchback (N14) 08/90→07/95								
Brake Pad Set, disc brake								
2.0 GTI 16V 2.0 GTI-R 4x4	105 162	10/90→05/95 10/90→05/95	→			**13.0460-5983.2**	**605983**	21713 16,5 - WE / - WK
NISSAN - SUNNY III Liftback (N14) 10/90→10/95								
Brake Pad Set, disc brake								
2.0 i 16V	105	10/90→05/95	→			**13.0460-5983.2**	**605983**	21713 16,5 - WE / - WK
NISSAN - SUNNY Traveller (140Y, 150Y) 06/79→02/82								
Wheel Brake Cylinder								
1.4 1.5	48 51	06/79→02/82 06/79→02/82	→		2	**24.3220-1703.3**	**020391**	GG
NISSAN - TEANA I (J31) 02/03→09/08								
Brake Pad Set, disc brake								
2.0 2.3 2.5 FOUR All-wheel Drive 3.5	103 127 118 170	10/03→06/08 10/03→06/08 02/03→09/08 10/03→06/08	←			**13.0460-5716.2**	**605716**	21561 17,0 + WK
NISSAN - TIIDA Hatchback (C11) 05/04→12/13								
Brake Pad Set, disc brake								
1.5 1.5 dCi 1.6 1.8	80 76 - 78 81 78 - 93	05/04→08/12 03/07→06/13 09/07→12/11 01/07→12/11	←			**13.0460-5716.2**	**605716**	21561 17,0 + WK
NISSAN - TIIDA Hatchback (C12) 08/10→								
Brake Pad Set, disc brake								
1.6 1.6 CVTC 1.8	85 - 140 80 - 86 96	08/12→ 08/12→ 08/12→	←			**13.0460-5716.2**	**605716**	21561 17,0 + WK
NISSAN - TIIDA Saloon (SC11) 05/04→12/13								
Brake Pad Set, disc brake								
1.5 dCi 1.6 1.8	76 - 78 81 78 - 93	01/07→12/12 09/07→12/12 01/07→12/12	←			**13.0460-5716.2**	**605716**	21561 17,0 + WK
NISSAN - VANETTE Bus (C22) 10/86→06/13								
Brake Pad Set, disc brake								
1.5 2.0 D	51 47	10/86→12/95 10/86→12/95	←	04/87→ 01/95		**13.0460-5937.2**	**605937**	AKE 21119 17,0 + WK

© 2022 Continental Aftermarket & Services GmbH

	kW				! #			
NISSAN - VANETTE Bus (C22) 10/86→06/13								
Wheel Brake Cylinder								
1.5 2.0 D	51 47	10/86→12/95 10/86→12/95	➡	04/87→ 01/95		**24.3220-1703.3**	**020391**	GG
NISSAN - VANETTE CARGO Van (HC 23) 09/94→05/02								
Brake Pad Set, disc brake								
2.0 D	49	01/95→05/01	⬅			**13.0460-5937.2**	**605937**	AKE 21119 17,0 + WK
NISSAN - VANETTE Van (C22) 10/86→06/13								
Brake Pad Set, disc brake								
1.5	51	10/86→12/95	⬅	07/87→ 01/95		**13.0460-5937.2**	**605937**	AKE 21119 17,0 + WK
2.0 D	49	07/91→01/95	⬅			**13.0460-5937.2**	**605937**	AKE 21119 17,0 + WK
NISSAN - X-TRAIL (T32RR) 04/16→								
Brake Master Cylinder								
1.6 dCi ALL MODE 4x4-i	96	04/16→		for left-hand drive vehicles; Type: T32R/T32RR		**24.4123-1728.3**	**011089**	Ø 23.8 without brake fluid reservoir
2.5 ALL MODE 4x4-i	126	04/16→		for left-hand drive vehicles; Manual Transmission		**24.4123-1728.3**	**011089**	Ø 23.8 without brake fluid reservoir
Brake Pad Set, disc brake								
1.6 dCi ALL MODE 4x4-i 2.0 ALL MODE 4x4-i 2.5 ALL MODE 4x4-i	96 106 126	04/16→ 04/16→ 04/16→	⬅	for vehicles with 3rd seating row		**13.0460-5686.2**	**605686**	AKE + WK
NISSAN - X-TRAIL I (T30) 01/01→12/13								
Brake Pad Set, disc brake								
2.0 2.0 4x4 2.2 dCi 2.2 DCi 2.2 dCi 4x4 2.2 DCi FWD 2.2 Di 4x4 2.5 4x4	103 - 110 103 - 206 100 84 100 84 84 121 - 134	07/01→01/13 06/01→01/13 12/03→01/13 10/04→01/13 06/01→12/08 06/01→09/04 07/01→10/05 09/01→01/13	⬅			**13.0460-5842.2**	**605842**	23420 16,5 - WE / - WK
NISSAN - X-TRAIL III (T32_, T32R, T32RR) 10/13→								
Brake Master Cylinder								
1.6 dCi	96	04/14→		→ 10/16; for left-hand drive vehicles; Automatic Transmission		**24.4123-1728.3**	**011089**	Ø 23.8 without brake fluid reservoir
				09/16→; for left-hand drive vehicles; 6-Speed Manual Transmission		**24.4123-1728.3**	**011089**	Ø 23.8 without brake fluid reservoir
1.6 dCi ALL MODE 4x4-i	96	04/14→		for left-hand drive vehicles; Type: T32R/T32RR		**24.4123-1728.3**	**011089**	Ø 23.8 without brake fluid reservoir
1.6 DIG-T	120	06/15→		for right-hand drive vehicles		**24.4123-1728.3**	**011089**	Ø 23.8 without brake fluid reservoir
2.0 2.0 Flexfuel 2.0 Flexfuel ALL MODE 4x4-i 2.5 ALL MODE 4x4-i 2.5 Flexfuel ALL MODE 4x4-i	104 - 108 106 106 124 126	12/13→ 09/14→ 02/14→ 10/14→ 02/14→		12/14→; for left-hand drive vehicles; Manual Transmission		**24.4123-1728.3**	**011089**	Ø 23.8 without brake fluid reservoir
2.0 dCi ALL MODE 4x4-i	130	10/16→		for left-hand drive vehicles; 6-Speed Manual Transmission		**24.4123-1728.3**	**011089**	Ø 23.8 without brake fluid reservoir
2.5	124	01/15→		for left-hand drive vehicles; Manual Transmission		**24.4123-1728.3**	**011089**	Ø 23.8 without brake fluid reservoir
Brake Pad Set, disc brake								
1.3 DIG-T 1.6 dCi 1.6 dCi ALL MODE 4x4-i 1.6 DIG-T 2.0 2.0 ALL MODE 4x4-i 2.0 dCi 2.0 dCi ALL MODE 4x4-i	116 - 118 96 96 120 104 - 108 106 - 108 130 130	04/19→ 04/14→ 04/14→ 06/15→ 12/13→ 12/13→ 10/16→ 10/16→	⬅	for vehicles with 3rd seating row		**13.0460-5686.2**	**605686**	AKE + WK

	kW				! #			
NISSAN - X-TRAIL III (T32_, T32R, T32RR) 10/13→								
Brake Pad Set, disc brake								
2.0 Flexfuel 2.0 Flexfuel ALL MODE 4x4-i 2.0 Hybrid 2.0 Hybrid ALL MODE 4x4-i 2.5 2.5 ALL MODE 4x4-i 2.5 Flexfuel ALL MODE 4x4-i	106 106 106 - 138 106 - 138 124 - 126 124 - 126 126	09/14→ 02/14→ 09/14→ 09/14→ 12/13→ 12/13→ 02/14→	←	for vehicles with 3rd seating row		**13.0460-5686.2**	**605686**	AKE + WK
1.7 dCi 1.7 dCi ALL MODE 4x4-i	96 - 120 96 - 120	04/19→ 04/19→	←			**13.0460-5686.2**	**605686**	AKE + WK
NISSAN - X-TRAIL III (T32R) 10/14→								
Brake Master Cylinder								
1.6 dCi	96	12/14→		→ 10/16; for left-hand drive vehicles; Automatic Transmission		**24.4123-1728.3**	**011089**	Ø 23.8 without brake fluid reservoir
				09/16→; for left-hand drive vehicles; 6-Speed Manual Transmission		**24.4123-1728.3**	**011089**	Ø 23.8 without brake fluid reservoir
2.0 2.0 ALL MODE 4x4-i 2.0 Flexfuel ALL MODE 4x4-i 2.5 Flexfuel ALL MODE 4x4-i	106 106 106 126	12/14→ 12/14→ 12/14→ 12/14→		for left-hand drive vehicles; Manual Transmission		**24.4123-1728.3**	**011089**	Ø 23.8 without brake fluid reservoir
Brake Pad Set, disc brake								
1.6 dCi 2.0 2.0 ALL MODE 4x4-i 2.0 Flexfuel ALL MODE 4x4-i 2.5 Flexfuel ALL MODE 4x4-i	96 106 106 106 126	12/14→ 12/14→ 12/14→ 12/14→ 12/14→	←	for vehicles with 3rd seating row		**13.0460-5686.2**	**605686**	AKE + WK
NISSAN - X-TRAIL VAN (T32) 10/13→								
Brake Master Cylinder								
dCi	96	04/14→		→ 10/16; for left-hand drive vehicles; Automatic Transmission		**24.4123-1728.3**	**011089**	Ø 23.8 without brake fluid reservoir
				09/16→; for left-hand drive vehicles; 6-Speed Manual Transmission		**24.4123-1728.3**	**011089**	Ø 23.8 without brake fluid reservoir
dCi 4x4	96	04/14→		for left-hand drive vehicles; Type: T32R/T32RR		**24.4123-1728.3**	**011089**	Ø 23.8 without brake fluid reservoir
Brake Pad Set, disc brake								
dCi dCi 4x4	96 96	04/14→ 04/14→	←	for vehicles with 3rd seating row		**13.0460-5686.2**	**605686**	AKE + WK
OPEL - ADAM (M13) 10/12→02/19								
Accessory Kit, brake shoes								
1.0	66 - 85	07/14→11/18	→	F6000001→; Inner Br. Drum Diam. [in]: 9		**03.0137-9309.2**	**669309**	AP
1.4 LPG 1.4 S	64 110	07/13→11/18 11/14→01/19	→	→ E6999999; Inner Br. Drum Diam. [in]: 9		**03.0137-9309.2**	**669309**	AP
1.2 1.4	51 64 - 74	10/12→02/19 10/12→02/19	→	01/13→; → E6999999; Inner Br. Drum Diam. [in]: 9		**03.0137-9309.2**	**669309**	AP
			→	F6000001→; Inner Br. Drum Diam. [in]: 9		**03.0137-9309.2**	**669309**	AP
OPEL - ASCONA C (J82) 09/81→10/88								
Guide Bolt, brake caliper								
2.0 i GT	95	03/87→08/88		10/87→	2	**11.8171-0008.1**	**990049**	ATE
OPEL - ASCONA C Hatchback (J82) 09/81→08/88								
Guide Bolt, brake caliper								
2.0 i GT	95	03/87→08/88		10/87→	2	**11.8171-0008.1**	**990049**	ATE

© 2022 Continental Aftermarket & Services GmbH

	kW				! #			
OPEL - ASTRA F (T92) 09/91→09/98								
Guide Bolt, brake caliper								
1.4 1.4 i	55 44	09/91→09/93 09/91→09/98	←	10/91→	2	**11.8171-0008.1**	**990049**	ATE
1.4	60	09/92→09/98	←	08/95→	2	**11.8171-0008.1**	**990049**	ATE
			←	→ 07/95	2	**11.8171-0008.1**	**990049**	ATE
1.4 i 16V 1.4 Si	66 60	02/96→09/98 03/92→09/98		for vehicles with reinforced brakes	2	**11.8171-0008.1**	**990049**	ATE
			←	Automatic Transmission; not for vehicles with reinforced brakes	2	**11.8171-0008.1**	**990049**	ATE
			←	Manual Transmission; not for vehicles with reinforced brakes	2	**11.8171-0008.1**	**990049**	ATE
1.6 1.6 i	55 52 - 55	09/95→09/98 03/92→09/98			2	**11.8171-0008.1**	**990049**	ATE
			←	Manual Transmission	2	**11.8171-0008.1**	**990049**	ATE
			←	Automatic Transmission	2	**11.8171-0008.1**	**990049**	ATE
1.6 i 16V 1.8 i	74 66	08/94→09/98 03/92→09/98			2	**11.8171-0008.1**	**990049**	ATE
			←		2	**11.8171-0008.1**	**990049**	ATE
1.6 Si	74	05/92→12/94	←		2	**11.8171-0008.1**	**990049**	ATE
1.7 D	42 - 44	03/92→09/98		for vehicles with reinforced brakes	2	**11.8171-0008.1**	**990049**	ATE
1.7 TD 1.7 TDS	50 60	11/94→09/98 03/92→09/98	←	not for vehicles with reinforced brakes	2	**11.8171-0008.1**	**990049**	ATE
1.8 i 16V 2.0 i 2.0 i 16V	82 - 92 85 100	06/93→09/98 03/92→09/98 02/95→09/98			2	**11.8171-0008.1**	**990049**	ATE
OPEL - ASTRA F CLASSIC Estate (T92) 01/98→01/05								
Guide Bolt, brake caliper								
1.4 i 1.6 i 1.6 i 16V	44 55 74	01/98→01/05 01/98→01/05 01/98→01/05			2	**11.8171-0008.1**	**990049**	ATE
OPEL - ASTRA F CLASSIC Hatchback (T92) 01/98→08/02								
Guide Bolt, brake caliper								
1.4 i 1.6 i 1.6 i 16V	44 55 74	01/98→08/02 01/98→08/02 01/98→08/02			2	**11.8171-0008.1**	**990049**	ATE
OPEL - ASTRA F CLASSIC Saloon (T92) 01/98→08/02								
Guide Bolt, brake caliper								
1.4 i 1.6 i 1.6 i 16V	44 55 74	01/98→08/02 01/98→08/02 01/98→08/02			2	**11.8171-0008.1**	**990049**	ATE
OPEL - ASTRA F Convertible (T92) 03/93→03/01								
Guide Bolt, brake caliper								
1.4 i 16V 1.4 Si	66 60	01/96→03/01 05/93→03/01		→ 09/98; for vehicles with reinforced brakes	2	**11.8171-0008.1**	**990049**	ATE
			←		2	**11.8171-0008.1**	**990049**	ATE
			←	→ 09/98; Manual Transmission; not for vehicles with reinforced brakes	2	**11.8171-0008.1**	**990049**	ATE
			←	→ 09/98; Automatic Transmission; not for vehicles with reinforced brakes	2	**11.8171-0008.1**	**990049**	ATE
1.6 i	52	03/93→08/96	←		2	**11.8171-0008.1**	**990049**	ATE
1.6 i	55	01/96→03/01		→ 09/98	2	**11.8171-0008.1**	**990049**	ATE
			←		2	**11.8171-0008.1**	**990049**	ATE
1.8 i 16V	85	11/94→03/01		→ 09/98	2	**11.8171-0008.1**	**990049**	ATE
					2	**11.8171-0008.1**	**990049**	ATE
2.0 i	85	03/93→10/94			2	**11.8171-0008.1**	**990049**	ATE
OPEL - ASTRA F Estate (T92) 09/91→01/98								
Guide Bolt, brake caliper								
1.4 1.4 i	55 44	09/91→09/93 09/91→01/98	←	10/91→	2	**11.8171-0008.1**	**990049**	ATE
1.4	60	09/92→01/98	←	08/95→	2	**11.8171-0008.1**	**990049**	ATE
			←	→ 07/95	2	**11.8171-0008.1**	**990049**	ATE
1.4 i 16V 1.4 Si	66 60	02/96→01/98 03/92→01/98		for vehicles with reinforced brakes	2	**11.8171-0008.1**	**990049**	ATE
			←	Manual Transmission; not for vehicles with reinforced brakes	2	**11.8171-0008.1**	**990049**	ATE

	kW				! #			
OPEL - ASTRA F Estate (T92) 09/91→01/98								
Guide Bolt, brake caliper								
1.4 i 16V 1.4 Si	66 60	02/96→01/98 03/92→01/98	←	Automatic Transmission; not for vehicles with reinforced brakes	2	**11.8171-0008.1**	**990049**	ATE
1.6 1.6 Si	55 74	09/95→01/98 03/92→12/94			2	**11.8171-0008.1**	**990049**	ATE
			←		2	**11.8171-0008.1**	**990049**	ATE
1.6 i	52	05/93→07/96	←		2	**11.8171-0008.1**	**990049**	ATE
1.6 i 1.8 i	55 66	09/91→01/98 09/91→01/98		10/91→	2	**11.8171-0008.1**	**990049**	ATE
			←	10/91→	2	**11.8171-0008.1**	**990049**	ATE
1.6 i 16V 1.8 i 16V 2.0 i 16V	74 85 - 92 100 - 110	08/94→01/98 06/93→01/98 03/93→01/98			2	**11.8171-0008.1**	**990049**	ATE
1.7 D 1.7 TD 1.7 TDS	42 - 44 50 60	12/91→01/98 11/94→01/98 12/91→01/98		for vehicles with reinforced brakes	2	**11.8171-0008.1**	**990049**	ATE
			←	not for vehicles with reinforced brakes	2	**11.8171-0008.1**	**990049**	ATE
2.0 i	85	09/91→07/94		10/91→	2	**11.8171-0008.1**	**990049**	ATE
OPEL - ASTRA F Estate Van (T92) 10/91→01/99								
Guide Bolt, brake caliper								
1.4 i	44	10/91→01/99	←	→ 09/98	2	**11.8171-0008.1**	**990049**	ATE
1.6 i	52 - 55	10/91→02/98			2	**11.8171-0008.1**	**990049**	ATE
			←		2	**11.8171-0008.1**	**990049**	ATE
1.6 i 16V	74	08/94→03/98			2	**11.8171-0008.1**	**990049**	ATE
1.7 D 1.7 TD	42 60	12/91→09/92 03/95→02/98		for vehicles with reinforced brakes	2	**11.8171-0008.1**	**990049**	ATE
			←	not for vehicles with reinforced brakes	2	**11.8171-0008.1**	**990049**	ATE
1.7 D 1.7 TD	44 50	07/92→01/99 08/94→01/99		→ 09/98; for vehicles with reinforced brakes	2	**11.8171-0008.1**	**990049**	ATE
			←	→ 09/98; not for vehicles with reinforced brakes	2	**11.8171-0008.1**	**990049**	ATE
OPEL - ASTRA F Hatchback (T92) 09/91→02/98								
Guide Bolt, brake caliper								
1.4	55	09/91→09/93	←	10/91→	2	**11.8171-0008.1**	**990049**	ATE
1.4	60	09/92→01/98	←	08/95→	2	**11.8171-0008.1**	**990049**	ATE
			←	→ 07/95	2	**11.8171-0008.1**	**990049**	ATE
1.4 i 1.6 Si	44 74	09/91→01/98 03/92→12/94	←		2	**11.8171-0008.1**	**990049**	ATE
1.4 i 16V 1.4 Si	66 60	09/96→02/98 03/92→01/98		for vehicles with reinforced brakes	2	**11.8171-0008.1**	**990049**	ATE
			←	Manual Transmission; not for vehicles with reinforced brakes	2	**11.8171-0008.1**	**990049**	ATE
			←	Automatic Transmission; not for vehicles with reinforced brakes	2	**11.8171-0008.1**	**990049**	ATE
1.6 1.6 i	55 52	09/95→01/98 05/93→07/96			2	**11.8171-0008.1**	**990049**	ATE
			←	Manual Transmission	2	**11.8171-0008.1**	**990049**	ATE
			←	Automatic Transmission	2	**11.8171-0008.1**	**990049**	ATE
1.6 i	55	09/91→01/98		10/91→	2	**11.8171-0008.1**	**990049**	ATE
			←	10/91→; Manual Transmission	2	**11.8171-0008.1**	**990049**	ATE
			←	10/91→; Automatic Transmission	2	**11.8171-0008.1**	**990049**	ATE
1.6 i 16V	74	08/94→01/98			2	**11.8171-0008.1**	**990049**	ATE
			←		2	**11.8171-0008.1**	**990049**	ATE
1.7 D 1.7 TD 1.7 TDS	42 - 44 50 60	12/91→01/98 11/94→01/98 12/91→01/98		for vehicles with reinforced brakes	2	**11.8171-0008.1**	**990049**	ATE
			←	not for vehicles with reinforced brakes	2	**11.8171-0008.1**	**990049**	ATE
1.8 i	66	09/91→01/98		10/91→	2	**11.8171-0008.1**	**990049**	ATE
			←	10/91→	2	**11.8171-0008.1**	**990049**	ATE
1.8 i 16V 2.0 i 16V	85 - 92 100	06/93→01/98 02/95→01/98			2	**11.8171-0008.1**	**990049**	ATE
2.0 GSI 16V 2.0 i	110 85	09/91→01/98 09/91→01/98		10/91→	2	**11.8171-0008.1**	**990049**	ATE
OPEL - ASTRA G CLASSIC (T98) 03/04→07/09								
Guide Bolt, brake caliper								
1.4 16V 1.6	66 76	05/04→07/09 03/06→06/08	←		2	**11.8171-0008.1**	**990049**	ATE

© 2022 Continental Aftermarket & Services GmbH

	kW				! #			
OPEL - ASTRA G CLASSIC (T98) 03/04→07/09								
Guide Bolt, brake caliper								
1.6 16V 1.7 CDTI	74 59	05/04→02/06 06/04→07/09			2	**11.8171-0008.1**	**990049**	ATE
OPEL - ASTRA G CLASSIC Caravan (F35) 03/04→07/09								
Guide Bolt, brake caliper								
1.4 1.4 16V 1.6 1.7 CDTI	66 66 74 - 76 59	10/07→07/09 07/04→09/07 06/04→07/09 05/04→07/09			2	**11.8171-0008.1**	**990049**	ATE
OPEL - ASTRA G CLASSIC Saloon (T98) 03/04→07/09								
Guide Bolt, brake caliper								
1.4 16V 1.6 16V	66 74	05/04→07/09 03/04→01/08			2	**11.8171-0008.1**	**990049**	ATE
OPEL - ASTRA G Convertible (T98) 03/01→10/05								
Guide Bolt, brake caliper								
1.6 1.6 16V 1.8 16V 2.2 16V 2.2 DTI	76 74 92 108 92	01/03→10/05 03/01→10/05 03/01→10/05 03/01→10/05 09/02→10/05			2	**11.8171-0008.1**	**990049**	ATE
2.0 16V Turbo 2.0 OPC	147 141	11/02→10/05 03/02→10/05			2	**11.8171-0008.1**	**990049**	ATE
OPEL - ASTRA G Coupe (T98) 03/00→05/05								
Guide Bolt, brake caliper								
1.6 16V 1.8 16V 2.0 16V Turbo 2.2 16V 2.2 DTI	74 - 76 85 - 92 140 - 141 108 92	03/00→05/05 03/00→05/05 09/00→05/05 09/00→05/05 09/02→05/05			2	**11.8171-0008.1**	**990049**	ATE
2.0 16V Turbo	147	11/02→05/05			2	**11.8171-0008.1**	**990049**	ATE
OPEL - ASTRA G Estate (T98) 02/98→07/04								
Guide Bolt, brake caliper								
1.2 16V	48	02/98→09/00		04/98→; → 18999999; for vehicles with drum brakes on the rear axle	2	**11.8171-0008.1**	**990049**	ATE
				22000001→	2	**11.8171-0008.1**	**990049**	ATE
1.2 16V	55	09/00→07/04		→ 18999999; for vehicles with drum brakes on the rear axle	2	**11.8171-0008.1**	**990049**	ATE
				22000001→	2	**11.8171-0008.1**	**990049**	ATE
1.4 16V 1.4 LPG 1.6 1.6 CNG 1.6 LPG 1.7 CDTI 1.7 DTI 16V 1.8 16V 2.0 DTI 16V 2.2 16V 2.2 DTI	66 66 62 - 76 71 74 - 76 59 55 92 74 108 86 - 92	06/98→07/04 03/98→07/04 09/00→07/04 03/03→07/04 03/98→07/04 04/03→05/04 02/00→07/04 09/00→07/04 08/99→07/04 03/01→07/04 09/02→07/04			2	**11.8171-0008.1**	**990049**	ATE
1.6 1.6 16V 1.7 TD 1.8 16V 2.0 16V 2.0 DI	55 74 50 85 100 60	02/98→09/00 02/98→07/04 02/98→08/00 02/98→09/00 02/98→07/04 02/98→07/04		04/98→	2	**11.8171-0008.1**	**990049**	ATE
2.0 OPC	141 - 147	09/02→07/04			2	**11.8171-0008.1**	**990049**	ATE
OPEL - ASTRA G Estate Van (F70) 09/98→04/05								
Guide Bolt, brake caliper								
1.2	48	09/98→08/00		→ 18999999; for vehicles with drum brakes on the rear axle	2	**11.8171-0008.1**	**990049**	ATE

	kW				! #			
OPEL - ASTRA G Estate Van (F70) 09/98→04/05								
Guide Bolt, brake caliper								
1.2	48	09/98→08/00	←	22000001→	2	**11.8171-0008.1**	**990049**	ATE
1.4 1.6 1.7 CDTi 1.7 DTI 16V 1.7 TD 2.0 DI 2.0 DTI	66 55 - 76 59 55 50 60 74	09/98→04/05 09/98→04/05 07/03→11/04 02/00→04/05 01/99→04/05 01/99→04/05 09/00→04/05	←		2	**11.8171-0008.1**	**990049**	ATE
OPEL - ASTRA G Hatchback (T98) 02/98→12/09								
Guide Bolt, brake caliper								
1.2 16V	48	02/98→09/00	←	04/98→; → 18999999; for vehicles with drum brakes on the rear axle	2	**11.8171-0008.1**	**990049**	ATE
			←	22000001→	2	**11.8171-0008.1**	**990049**	ATE
1.2 16V	55	09/00→01/05	←	→ 18999999; for vehicles with drum brakes on the rear axle	2	**11.8171-0008.1**	**990049**	ATE
			←	22000001→	2	**11.8171-0008.1**	**990049**	ATE
1.4 1.6 1.6 LPG 1.7 CDTI 1.7 DTI 16V 1.8 1.8 16V 2.0 DTI 16V 2.2 DTI	66 62 - 76 76 59 55 81 92 74 86 - 92	09/07→12/09 09/00→01/05 11/02→06/07 04/03→01/05 02/00→01/05 02/03→01/04 09/00→01/05 08/99→01/05 09/02→01/05	←		2	**11.8171-0008.1**	**990049**	ATE
1.4 16V 1.4 LPG 1.6 1.6 16V 1.6 LPG 1.7 TD 1.8 16V 2.0 16V 2.0 DI	66 66 55 74 74 50 85 100 60	02/98→01/05 02/98→01/05 02/98→09/00 02/98→01/05 03/98→01/05 02/98→08/00 02/98→09/00 02/98→01/05 02/98→01/05	←	04/98→	2	**11.8171-0008.1**	**990049**	ATE
2.0 16V OPC 2.0 OPC	118 141 - 147	11/99→09/02 09/02→01/05			2	**11.8171-0008.1**	**990049**	ATE
2.2 16V	108	06/00→01/05	←	09/00→	2	**11.8171-0008.1**	**990049**	ATE
OPEL - ASTRA G Saloon (T98) 03/98→12/09								
Guide Bolt, brake caliper								
1.2 16V	48 - 55	09/98→01/05	←	→ 18999999; for vehicles with drum brakes on the rear axle	2	**11.8171-0008.1**	**990049**	ATE
			←	22000001→	2	**11.8171-0008.1**	**990049**	ATE
1.4 1.4 16V 1.4 LPG 1.6 1.6 16V 1.6 LPG 1.7 CDTI 1.7 DTI 16V 1.7 TD 1.8 16V 2.0 16V 2.0 DI 2.0 DTI 16V 2.2 16V 2.2 DTI	66 66 66 55 - 76 74 55 - 74 59 55 50 85 - 92 100 60 74 108 86 - 92	09/07→12/09 09/98→01/05 03/98→01/05 09/98→12/09 09/98→01/05 06/02→01/05 04/03→12/09 02/00→01/05 09/98→08/00 09/98→01/05 09/98→01/05 09/98→01/05 08/99→01/05 03/01→01/05 09/02→01/05	←		2	**11.8171-0008.1**	**990049**	ATE
OPEL - ASTRA H (A04) 01/04→05/14								
Spring, brake caliper								
2.0 Turbo	177	03/05→10/10			2	**11.8116-0356.1**	**390586**	ATE
Guide Bolt, brake caliper								
1.2	59	08/05→10/10			2	**11.8171-0008.1**	**990049**	ATE

© 2022 Continental Aftermarket & Services GmbH

	kW				! #			
OPEL - ASTRA H (A04) 01/04→05/14								
Guide Bolt, brake caliper								
1.3 CDTI 1.4 1.4 LPG 1.6 1.6 Turbo 1.7 CDTI 1.8 1.9 CDTI 2.0 Turbo	66 55 - 66 66 77 132 59 - 74 92 - 103 74 - 110 125 - 177	08/05→10/10 03/04→10/10 08/09→10/10 03/04→10/10 02/07→10/10 03/04→10/10 01/04→10/10 09/04→10/10 03/04→10/10			2	**11.8171-0008.1**	**990049**	ATE
1.6	85	12/06→05/14		01/07→ 11/10	2	**11.8171-0008.1**	**990049**	ATE
1.7 CDTI	81 - 92	02/07→05/14		04/07→ 11/10	2	**11.8171-0008.1**	**990049**	ATE
1.9 CDTI 1.9 CDTI 16V	88 88	06/04→10/10 04/04→10/10		09/04→	2	**11.8171-0008.1**	**990049**	ATE
Accessory Kit, brake shoes								
1.2 1.4 1.6 1.7 CDTI	59 66 77 59 - 74	08/05→10/10 03/04→10/10 03/04→10/10 03/04→10/10	➡	08/06→		**03.0137-9309.2**	**669309**	AP
1.4 LPG	66	08/09→10/10	➡			**03.0137-9309.2**	**669309**	AP
OPEL - ASTRA H CLASSIC Estate (A04) 12/06→								
Guide Bolt, brake caliper								
1.4 1.7 CDTi 1.7 CDTI 1.8	66 81 92 103	01/09→ 01/09→ 01/09→ 01/12→05/14	⬅		2	**11.8171-0008.1**	**990049**	ATE
1.6	85	12/06→05/14	⬅	01/07→ 11/10	2	**11.8171-0008.1**	**990049**	ATE
Accessory Kit, brake shoes								
1.4	66	01/09→	➡			**03.0137-9309.2**	**669309**	AP
OPEL - ASTRA H CLASSIC Hatchback (A04) 01/09→								
Guide Bolt, brake caliper								
1.3 CDTI 1.6	66 85	01/09→ 01/09→		→ 11/10	2	**11.8171-0008.1**	**990049**	ATE
1.4 1.7 CDTI 1.8	66 81 - 92 103	01/09→ 01/09→ 02/13→			2	**11.8171-0008.1**	**990049**	ATE
Accessory Kit, brake shoes								
1.4	66	01/09→	➡			**03.0137-9309.2**	**669309**	AP
OPEL - ASTRA H CLASSIC Saloon (A04) 02/07→								
Guide Bolt, brake caliper								
1.6 1.7 CDTi 1.7 CDTI 1.8	85 81 92 103	01/09→05/14 01/09→ 01/09→ 02/07→09/12			2	**11.8171-0008.1**	**990049**	ATE
OPEL - ASTRA H Estate (A04) 08/04→05/14								
Guide Bolt, brake caliper								
1.3 CDTI 1.4 1.4 LPG 1.6 1.6 LPG 1.6 Turbo 1.7 CDTI 1.8 1.9 CDTI 1.9 CDTI 16V 2.0 Turbo	66 55 - 66 66 77 85 132 59 - 74 103 74 - 110 88 125 - 147	08/05→10/10 08/04→10/10 08/09→10/10 08/04→10/10 08/09→10/10 02/07→10/10 08/04→10/10 08/05→05/14 09/04→10/10 08/04→10/10 08/04→10/10	⬅		2	**11.8171-0008.1**	**990049**	ATE
1.6	85	12/06→05/14	⬅	01/07→ 11/10	2	**11.8171-0008.1**	**990049**	ATE

	kW				! #			
OPEL - ASTRA H Estate (A04) 08/04→05/14								
Guide Bolt, brake caliper								
1.7 CDTI	81 - 92	02/07→05/14	←	04/07→ 11/10	2	**11.8171-0008.1**	**990049**	ATE
1.8	92	08/04→10/10	←	09/04→	2	**11.8171-0008.1**	**990049**	ATE
Accessory Kit, brake shoes								
1.4 1.6 1.7 CDTI	55 - 66 77 59 - 74	08/04→10/10 08/04→10/10 08/04→10/10	→	08/06→		**03.0137-9309.2**	**669309**	AP
1.4 LPG	66	08/09→10/10	→			**03.0137-9309.2**	**669309**	AP
OPEL - ASTRA H Estate Van (L70) 02/04→12/13								
Guide Bolt, brake caliper								
1.3 CDTI 1.6 EcoTec 1.9 CDTI 1.9 CDTI 16V	66 76 - 85 88 - 110 88	08/05→10/10 02/04→12/10 09/04→10/10 08/04→10/10	←		2	**11.8171-0008.1**	**990049**	ATE
1.4 EcoTec 1.7 CDTI 1.9 CDTI	66 59 74	12/04→12/12 12/04→07/07 08/05→12/12			2	**11.8171-0008.1**	**990049**	ATE
1.7 CDTI	74	03/04→10/10	←	08/04→	2	**11.8171-0008.1**	**990049**	ATE
1.7 CDTI	81 - 92	02/07→10/10	←	04/07→	2	**11.8171-0008.1**	**990049**	ATE
Accessory Kit, brake shoes								
1.4 EcoTec 1.7 CDTI	66 74	12/04→12/12 03/04→10/10	→	08/06→		**03.0137-9309.2**	**669309**	AP
1.6 EcoTec 1.7 CDTI	76 59	02/04→11/04 12/04→07/07	→			**03.0137-9309.2**	**669309**	AP
OPEL - ASTRA H GTC (A04) 03/05→10/10								
Spring, brake caliper								
2.0 Turbo	177	08/05→10/10			2	**11.8116-0356.1**	**390586**	ATE
Guide Bolt, brake caliper								
1.3 CDTI	66	04/05→10/10		08/05→	2	**11.8171-0008.1**	**990049**	ATE
1.4 1.6 1.6 Turbo 1.7 CDTi 1.7 CDTI 1.8 1.9 CDTi 1.9 CDTI 1.9 CDTi 16V 2.0 Turbo	55 - 66 77 132 74 59 92 - 103 110 74 - 88 88 125 - 177	03/05→10/10 03/05→10/10 02/07→10/10 03/05→10/10 03/05→10/10 03/05→10/10 03/05→10/10 09/05→10/10 03/05→10/10 03/05→10/10			2	**11.8171-0008.1**	**990049**	ATE
1.6	85	12/06→10/10		01/07→	2	**11.8171-0008.1**	**990049**	ATE
1.7 CDTI	81 - 92	02/07→10/10		04/07→	2	**11.8171-0008.1**	**990049**	ATE
Accessory Kit, brake shoes								
1.4 1.6 1.7 CDTi 1.7 CDTI	55 - 66 77 74 59	03/05→10/10 03/05→10/10 03/05→10/10 03/05→10/10	→	08/06→		**03.0137-9309.2**	**669309**	AP
OPEL - ASTRA H Saloon (A04) 02/07→05/14								
Guide Bolt, brake caliper								
1.3 CDTi 1.4 1.6 1.7 CDTi 1.8	66 66 77 74 103	02/07→10/10 02/07→06/10 02/07→06/10 02/07→10/10 02/07→09/12			2	**11.8171-0008.1**	**990049**	ATE
1.6	85	02/07→05/14		→ 11/10	2	**11.8171-0008.1**	**990049**	ATE
1.7 CDTi	81	02/07→05/14		04/07→ 11/10	2	**11.8171-0008.1**	**990049**	ATE

© 2022 Continental Aftermarket & Services GmbH

	kW				! #			
OPEL - ASTRA H Saloon (A04) 02/07→05/14								
Accessory Kit, brake shoes								
1.7 CDTi	74	02/07→10/10	➡			**03.0137-9309.2**	**669309**	AP
OPEL - ASTRA H TwinTop (A04) 09/05→10/10								
Guide Bolt, brake caliper								
1.4 1.6 1.8 1.9 CDTi 2.0 Turbo	66 77 92 - 103 110 125 - 147	10/05→10/10 09/05→10/10 09/05→10/10 09/05→10/10 09/05→10/10		03/06→	2	**11.8171-0008.1**	**990049**	ATE
1.6 1.6 Turbo	85 132	12/06→10/10 02/07→10/10			2	**11.8171-0008.1**	**990049**	ATE
OPEL - ASTRA K (B16) 06/15→								
Guide Bolt, brake caliper								
1.0 Turbo 1.4 1.4 CNG 1.4 Turbo 1.6 BiTurbo 1.6 CDTi 1.6 Turbo	66 - 77 74 81 92 - 110 110 70 - 118 147	06/15→ 06/15→ 10/17→ 06/15→ 08/18→ 06/15→ 11/15→	⬅			**11.8171-0008.1**	**990049**	ATE
Brake Disc								
1.0 Turbo 1.2 Turbo 1.4 1.4 CNG 1.4 Turbo 1.5 CRDI 1.6 BiTurbo 1.6 CDTi 1.6 Turbo	66 - 77 81 - 107 74 81 92 - 110 77 - 90 110 70 - 118 147	06/15→ 08/19→ 06/15→ 10/17→ 06/15→ 08/19→ 08/18→ 06/15→ 11/15→	⬅			**24.0126-0187.1**	**426187**	Ø 276 Brake Disc Thickness [mm] 26 Minimum thickness [mm] 23 Vented + S
OPEL - ASTRA K Estate Van 11/15→								
Guide Bolt, brake caliper								
1.0	77	05/18→	⬅			**11.8171-0008.1**	**990049**	ATE
Brake Disc								
1.0 1.4 1.5 CRDI	77 110 77	05/18→ 06/18→ 08/19→	⬅			**24.0126-0187.1**	**426187**	Ø 276 Brake Disc Thickness [mm] 26 Minimum thickness [mm] 23 Vented + S
OPEL - ASTRA K Hatchback Van 06/15→								
Guide Bolt, brake caliper								
1.6 CDTI	100	04/18→	⬅			**11.8171-0008.1**	**990049**	ATE
Brake Disc								
1.6 CDTI	100	04/18→	⬅			**24.0126-0187.1**	**426187**	Ø 276 Brake Disc Thickness [mm] 26 Minimum thickness [mm] 23 Vented + S
OPEL - ASTRA K Sports Tourer (B16) 11/15→								
Guide Bolt, brake caliper								
1.0 Turbo 1.4 1.4 CNG 1.4 Turbo 1.6 BiTurbo 1.6 CDTi 1.6 Turbo	66 - 77 74 81 92 - 110 110 70 - 118 147	11/15→ 11/15→ 10/17→ 11/15→ 08/18→ 11/15→ 11/15→	⬅			**11.8171-0008.1**	**990049**	ATE

	kW				! #			
OPEL - ASTRA K Sports Tourer (B16) 11/15→								
Brake Disc								
1.0 Turbo	66 - 77	11/15→				**24.0126-0187.1**	**426187**	Ø 276 Brake Disc Thickness [mm] 26 Minimum thickness [mm] 23 Vented + S
1.2 Turbo	81 - 107	08/19→						
1.4	74	11/15→						
1.4 CNG	81	10/17→						
1.4 Turbo	92 - 110	11/15→						
1.5 CRDI	77 - 90	08/19→						
1.6 BiTurbo	110	08/18→						
1.6 CDTi	70 - 118	11/15→						
1.6 Turbo	147	11/15→						
OPEL - CALIBRA A (C89) 08/89→07/97								
Guide Bolt, brake caliper								
2.0 i	85	08/89→12/96			2	**11.8171-0008.1**	**990049**	ATE
2.0 i 16V	100 - 110	06/90→07/97						
2.0 i 16V 4x4	100 - 110	06/90→07/97			2	**11.8171-0008.1**	**990049**	ATE
2.0 i 4x4	85	06/90→07/97						
2.0 i Turbo 4x4	150	08/91→07/97		T1000001→	2	**11.8171-0008.1**	**990049**	ATE
2.5 i V6	125	04/93→07/97		→ S9999999	2	**11.8171-0008.1**	**990049**	ATE
OPEL - COMBO Box Body/MPV 10/01→								
Guide Bolt, brake caliper								
1.3 CDTI 16V	51 - 55	08/05→		43033899, 53000001→; → 10/11; for increased payload	2	**11.8171-0008.1**	**990049**	ATE
1.4 16V	66	08/05→						
1.6	64	10/01→						
1.7 DI 16V	48	10/01→						
1.7 DTI 16V	55	10/01→						
1.6 CNG 16V	69 - 71	04/05→		→ 10/11	2	**11.8171-0008.1**	**990049**	ATE
1.7 CDTI 16V	74	12/04→						
OPEL - COMBO Box Body/MPV (71_) 07/94→10/01								
Guide Bolt, brake caliper								
1.2	33	07/94→10/01		→ 09/00	2	**11.8171-0008.1**	**990049**	ATE
1.4	44 - 60	07/94→10/01						
1.7 D	44	07/94→10/01						
1.4 16V	66	08/99→10/01		43033899, 53000001→; for increased payload	2	**11.8171-0008.1**	**990049**	ATE
OPEL - COMBO Box Body/MPV (K9) 06/18→								
Guide Bolt, brake caliper								
1.2	81 - 96	02/19→				**11.8171-0008.1**	**990049**	ATE
1.5 D	56 - 96	08/18→						
1.5 D 4x4	96	08/18→						
1.6 D	55 - 73	06/18→						
Combo-e	100	07/21→						
Brake Pad Set, disc brake								
1.2	81 - 96	02/19→		for brake disc diameter [mm]: 283		**13.0460-3870.2**	**603870**	BOS 25895 18,5 - WE / - WK + Zub
1.5 D	56 - 96	08/18→				**13.0470-3870.2**	**LD3870**	BOS 25895 18,5 - WE / - WK + Zub Ceramic
1.5 D 4x4	96	08/18→						
1.6 D	55 - 73	06/18→		for brake disc diameter [mm]: 304; →Orga 16246		**13.0460-7339.2**	**607339**	ATE + WE / - WK
Combo-e	100	07/21→		+ eFSB		**13.0460-3871.2**	**603871**	BOS 25839 17,8 - WE / - WK + Zub
						13.0470-3871.2	**LD3871**	BOS 25839 17,8 - WE / - WK + Zub Ceramic
OPEL - COMBO Box Body/MPV (X12) 02/12→								
Accessory Kit, brake shoes								
1.3 CDTI	59	02/12→		03/15→; Inner Br. Drum Diam. [in]: 10; for extended wheelbase		**03.0137-9309.2**	**669309**	AP

© 2022 Continental Aftermarket & Services GmbH

	kW				! #			
OPEL - COMBO Box Body/MPV (X12) 02/12→								
Accessory Kit, brake shoes								
1.3 CDTI 1.6 CDTI	66 - 70 66 - 88	02/12→ 02/12→	➡	Inner Br. Drum Diam. [in]: 10; for extended wheelbase		**03.0137-9309.2**	**669309**	AP
1.4 1.4 CNG 2.0 CDTI	70 - 88 88 99	02/12→ 02/12→ 02/12→	➡	Inner Br. Drum Diam. [in]: 10		**03.0137-9309.2**	**669309**	AP
OPEL - COMBO E Tour / Life (K9) 06/18→								
Guide Bolt, brake caliper								
1.2 1.5 Combo-e	81 - 96 56 - 96 100	06/18→ 06/18→ 06/21→	⬅			**11.8171-0008.1**	**990049**	ATE
Brake Pad Set, disc brake								
1.2 1.5 Combo-e	81 - 96 56 - 96 100	06/18→ 06/18→ 06/21→	⬅	for brake disc diameter [mm]: 283		**13.0460-3870.2** **13.0470-3870.2**	**603870** **LD3870**	BOS 25895 18,5 - WE / - WK + Zub BOS 25895 18,5 - WE / - WK + Zub Ceramic
			⬅	for brake disc diameter [mm]: 304; →Orga 16246		**13.0460-7339.2**	**607339**	ATE + WE / - WK
			➡	+ eFSB		**13.0460-3871.2** **13.0470-3871.2**	**603871** **LD3871**	BOS 25839 17,8 - WE / - WK + Zub BOS 25839 17,8 - WE / - WK + Zub Ceramic
OPEL - COMBO Tour 10/01→12/11								
Guide Bolt, brake caliper								
1.3 CDTI 16V 1.6 1.7 DI 16V 1.7 DTI 16V	51 62 - 64 48 55	06/04→01/11 10/01→09/06 10/01→06/04 10/01→06/04		43033899, 53000001→; for increased payload	2	**11.8171-0008.1**	**990049**	ATE
1.3 CDTI 16V 1.4	55 66	10/05→12/11 10/04→12/11		43033899, 53000001→; → 10/11; for increased payload	2	**11.8171-0008.1**	**990049**	ATE
1.6 CNG 1.7 CDTI 16V	69 74	06/06→12/11 07/04→12/11		→ 10/11	2	**11.8171-0008.1**	**990049**	ATE
1.6 CNG	71	04/05→01/11			2	**11.8171-0008.1**	**990049**	ATE
OPEL - COMBO Tour (X12) 02/12→								
Accessory Kit, brake shoes								
1.3 CDTI 1.6 CDTI	55 - 70 66 - 88	02/12→ 02/12→	➡	Inner Br. Drum Diam. [in]: 10; for extended wheelbase		**03.0137-9309.2**	**669309**	AP
1.4 1.4 CNG 2.0 CDTI	70 - 88 88 99	02/12→ 02/12→ 02/12→	➡	Inner Br. Drum Diam. [in]: 10		**03.0137-9309.2**	**669309**	AP
OPEL - CORSA A Hatchback (S83) 09/82→03/93								
Guide Bolt, brake caliper								
1.0 1.2 i 1.2 N 1.4 i 1.4 S 1.4 Si 1.5 D 1.5 TD 1.6 GSI 1.6 GSI Cat	33 33 38 40 - 44 53 60 37 49 72 74	09/82→03/93 09/89→03/93 01/90→03/93 01/85→03/93 01/90→03/93 09/91→03/93 09/87→03/93 03/88→03/93 09/89→03/93 02/92→03/93	⬅	N4000001→; → 10/92	2	**11.8171-0008.1**	**990049**	ATE
1.2 1.2 S 1.6 GSI	33 - 44 40 55 - 74	09/82→08/90 09/82→02/90 05/88→09/92	⬅	N4000001→	2	**11.8171-0008.1**	**990049**	ATE
OPEL - CORSA A Hatchback Van (S83) 02/86→09/94								
Guide Bolt, brake caliper								
1.0 1.2	33 33 - 44	02/86→04/89 02/86→07/90	⬅	N4000001→	2	**11.8171-0008.1**	**990049**	ATE

	kW				! #			
OPEL - CORSA A Hatchback Van (S83) 02/86→09/94								
Guide Bolt, brake caliper								
1.5 D	37	06/87→04/89	←	N4000001→	2	**11.8171-0008.1**	**990049**	ATE
OPEL - CORSA A TR (S83) 09/82→03/93								
Guide Bolt, brake caliper								
1.0 1.2 N 1.2 S	33 33 43	09/82→09/92 01/85→10/87 09/82→10/87	←	N4000001→	2	**11.8171-0008.1**	**990049**	ATE
1.2 i 1.2 S 1.4 i 1.4 S 1.5 D 1.5 TD	33 40 44 53 37 49	09/89→03/93 09/82→03/93 10/89→03/93 09/89→03/93 10/87→11/92 10/87→03/93	←	N4000001→; → 10/92	2	**11.8171-0008.1**	**990049**	ATE
OPEL - CORSA B (S93) 03/93→12/02								
Guide Bolt, brake caliper								
1.0 i 12V 1.4 i 16V 1.4 Si 1.5 D 1.5 TD 1.6 i 16V 1.7 D	40 66 60 37 49 74 - 78 44	11/96→09/00 09/94→09/00 03/93→09/00 03/93→09/00 03/93→09/00 09/94→09/00 02/96→09/00	←		2	**11.8171-0008.1**	**990049**	ATE
1.2 i	33	03/93→09/00	←	Automatic Transmission; for vehicles without sports package	2	**11.8171-0008.1**	**990049**	ATE
			←	Manual Transmission; for vehicles without sports package	2	**11.8171-0008.1**	**990049**	ATE
1.2 i 16V	48	03/98→09/00	←	04/98→; for vehicles without sports package	2	**11.8171-0008.1**	**990049**	ATE
			←	04/98→; for vehicles with sports package	2	**11.8171-0008.1**	**990049**	ATE
			←	04/98→; Manual Transmission; for vehicles without sports package	2	**11.8171-0008.1**	**990049**	ATE
			←	04/98→; Automatic Transmission; for vehicles without sports package	2	**11.8171-0008.1**	**990049**	ATE
1.4 i 1.4 i 16V	40 - 44 63	03/93→09/00 08/97→09/00	←	for vehicles with sports package	2	**11.8171-0008.1**	**990049**	ATE
			←	Automatic Transmission; for vehicles without sports package	2	**11.8171-0008.1**	**990049**	ATE
			←	Manual Transmission; for vehicles without sports package	2	**11.8171-0008.1**	**990049**	ATE
1.6 GSI 16V	80	03/93→09/00	←	09/93→	2	**11.8171-0008.1**	**990049**	ATE
OPEL - CORSA B Estate (S93) 04/98→12/02								
Guide Bolt, brake caliper								
1.4 i 16V 1.7 D	66 44	01/99→12/02 01/99→12/02	←	→ 09/00	2	**11.8171-0008.1**	**990049**	ATE
OPEL - CORSA B Hatchback Van (S93) 08/94→12/01								
Guide Bolt, brake caliper								
1.4 i 1.7 D	44 44	08/99→09/00 08/99→09/00	←		2	**11.8171-0008.1**	**990049**	ATE
OPEL - CORSA C (X01) 09/00→12/09								
Guide Bolt, brake caliper								
1.7 CDTI	74	06/03→12/09		→ 09/06	2	**11.8171-0008.1**	**990049**	ATE
OPEL - CORSA C Hatchback Van (X01) 09/00→12/12								
Guide Bolt, brake caliper								
1.7 CDTi	74	08/03→12/12		→ 09/06	2	**11.8171-0008.1**	**990049**	ATE
OPEL - CORSA D (S07) 07/06→08/14								
Brake Caliper								
1.4 1.6 Turbo 1.7 CDTI	88 110 - 155 96	07/12→08/14 11/06→08/14 12/09→08/14	→			**24.3367-1717.5**	**241405**	BOS without holder
			→			**24.3367-1718.5**	**241406**	BOS without holder
1.7 CDTI	92	08/06→12/11	→	→ 84039950;		**24.3367-1717.5**	**241405**	BOS without holder
			→	→ 84039950;		**24.3367-1718.5**	**241406**	BOS without holder
Guide Bolt, brake caliper								
1.6 Turbo	110	05/07→08/14		06/07→	2	**11.8171-0008.1**	**990049**	ATE

© 2022 Continental Aftermarket & Services GmbH

	kW				! #			
OPEL - CORSA D (S07) 07/06→08/14								
Guide Bolt, brake caliper								
1.6 Turbo	141	11/06→08/14		03/07→	2	**11.8171-0008.1**	**990049**	ATE
1.6 Turbo	155	06/11→08/14			2	**11.8171-0008.1**	**990049**	ATE
Accessory Kit, brake shoes								
1.0 1.2 1.3 CDTI 1.4 1.4 LPG	44 59 55 - 66 66 66	07/06→12/10 07/06→08/14 07/06→08/14 07/06→08/14 08/06→12/11	➡	10/06→; Number of Doors: 5		**03.0137-9309.2**	**669309**	AP
1.0 1.2 1.2 LPG 1.3 CDTI 1.4 1.4 LPG	48 51 - 63 55 - 63 70 64 - 74 64	12/09→08/14 12/09→08/14 08/06→08/14 06/09→08/14 09/09→08/14 09/09→08/14	➡	Number of Doors: 5		**03.0137-9309.2**	**669309**	AP
OPEL - CORSA D Hatchback Van (S07) 07/06→08/14								
Brake Caliper								
1.4 1.6 1.7 CDTI	88 141 96	07/12→08/14 07/12→08/14 07/12→08/14	➡ ➡	◪ ◪		**24.3367-1717.5** **24.3367-1718.5**	**241405** **241406**	BOS without holder BOS without holder
Guide Bolt, brake caliper								
1.6	141	07/12→08/14			2	**11.8171-0008.1**	**990049**	ATE
Accessory Kit, brake shoes								
1.0 1.3 CDTI	44 55 - 66	08/06→08/14 07/06→08/14	➡	10/06→; Number of Doors: 5		**03.0137-9309.2**	**669309**	AP
1.0 1.2 1.3 CDTI 1.4	48 51 - 63 70 74	01/10→08/14 08/06→08/14 11/09→08/14 07/12→08/14	➡	Number of Doors: 5		**03.0137-9309.2**	**669309**	AP
OPEL - CORSA E (X15) 09/14→								
Spring, brake caliper								
1.0 1.2 1.3 CDTI 1.4 1.4 Turbo	66 - 85 51 55 - 70 55 - 66 74	09/14→ 09/14→ 09/14→ 09/14→ 09/14→06/19	⬅	11/14→; for brake disc diameter [mm]: 284	2	**11.8116-0356.1**	**390586**	ATE
1.4 LPG 1.4 Turbo	64 - 66 110	03/15→ 03/15→	⬅	for brake disc diameter [mm]: 284	2	**11.8116-0356.1**	**390586**	ATE
Guide Bolt, brake caliper								
1.0 1.2 1.3 CDTI 1.4 1.4 Turbo	66 - 85 51 55 - 70 55 - 66 74	09/14→ 09/14→ 09/14→ 09/14→ 09/14→06/19		11/14→; for brake disc diameter [mm]: 308	2	**11.8171-0008.1**	**990049**	ATE
1.4 LPG 1.4 Turbo	64 - 66 110	03/15→ 03/15→		for brake disc diameter [mm]: 308	2	**11.8171-0008.1**	**990049**	ATE
Accessory Kit, brake shoes								
1.0 1.2 1.3 CDTI 1.4 1.4 Turbo	66 - 85 51 55 - 70 55 - 66 74	09/14→ 09/14→ 09/14→ 09/14→ 09/14→06/19	➡	11/14→; Inner Br. Drum Diam. [in]: 9		**03.0137-9309.2**	**669309**	AP
1.4 LPG 1.4 Turbo	64 - 66 110	03/15→ 03/15→	➡	Inner Br. Drum Diam. [in]: 9		**03.0137-9309.2**	**669309**	AP

	kW				! #			
OPEL - CORSA E Hatchback Van (X15) 09/14→								
Spring, brake caliper								
1.2 1.3 CDTI	51 55	01/15→ 01/15→	←	for brake disc diameter [mm]: 284	2	**11.8116-0356.1**	**390586**	ATE
1.3 CDTI 1.4	70 55 - 66	09/14→ 09/14→	←	11/14→; for brake disc diameter [mm]: 284	2	**11.8116-0356.1**	**390586**	ATE
Guide Bolt, brake caliper								
1.2 1.3 CDTI	51 55	01/15→ 01/15→		for brake disc diameter [mm]: 308	2	**11.8171-0008.1**	**990049**	ATE
1.3 CDTI 1.4	70 55 - 66	09/14→ 09/14→		11/14→; for brake disc diameter [mm]: 308	2	**11.8171-0008.1**	**990049**	ATE
Accessory Kit, brake shoes								
1.2 1.3 CDTI	51 55	01/15→ 01/15→	→	Inner Br. Drum Diam. [in]: 9		**03.0137-9309.2**	**669309**	AP
1.3 CDTI 1.4	70 55 - 66	09/14→ 09/14→	→	11/14→; Inner Br. Drum Diam. [in]: 9		**03.0137-9309.2**	**669309**	AP
OPEL - CORSA F 07/19→								
Brake Pad Set, disc brake								
CORSA-e	100	07/19→	→			**13.0460-3871.2** **13.0470-3871.2**	**603871** **LD3871**	BOS 25839 17,8 - WE / - WK + Zub BOS 25839 17,8 - WE / - WK + Zub Ceramic
Brake Disc								
1.2 1.5 CORSA-e	55 - 96 75 100	07/19→ 07/19→ 07/19→	←			**24.0122-0194.1**	**422194**	Ø 266 Brake Disc Thickness [mm] 22 Minimum thickness [mm] 20 Vented + S
Wheel Brake Cylinder								
1.2 1.5	55 - 96 75	07/19→ 07/19→	→		2	**24.3220-1743.3**	**020556**	ALU
OPEL - CORSA F Hatchback Van 07/19→								
Brake Disc								
1.2 1.5	55 75	07/19→ 07/19→	←			**24.0122-0194.1**	**422194**	Ø 266 Brake Disc Thickness [mm] 22 Minimum thickness [mm] 20 Vented + S
Wheel Brake Cylinder								
1.2 1.5	55 75	07/19→ 07/19→	→		2	**24.3220-1743.3**	**020556**	ALU
OPEL - CROSSLAND X / CROSSLAND (P17, P2QO) 03/17→								
Brake Pad Set, disc brake								
1.2 1.2 LPG 1.5 1.5 Turbo D 1.6 Turbo D	60 - 96 60 81 75 - 88 73 - 88	03/17→ 10/17→ 10/20→ 06/18→ 03/17→	←	for brake disc diameter [mm]: 266; Brake Size: 14"		**13.0460-3994.2** **13.0470-3994.2**	**603994** **LD3994**	BOS 23599 19,0 - WE / - WK + Zub BOS 23599 19,0 - WE / - WK + Zub Ceramic
Brake Disc								
1.2 1.2 LPG 1.5 1.5 Turbo D 1.6 Turbo D	60 - 96 60 81 75 - 88 73 - 88	03/17→ 10/17→ 10/20→ 06/18→ 03/17→	←	Brake Size: 14"		**24.0122-0194.1**	**422194**	Ø 266 Brake Disc Thickness [mm] 22 Minimum thickness [mm] 20 Vented + S
OPEL - CROSSLAND X Van 03/17→								
Brake Pad Set, disc brake								
1.2 1.5	61 - 81 75	07/19→ 06/18→	←	for brake disc diameter [mm]: 266; Brake Size: 14"		**13.0460-3994.2**	**603994**	BOS 23599 19,0 - WE / - WK + Zub

© 2022 Continental Aftermarket & Services GmbH

	kW				! #			
OPEL - CROSSLAND X Van 03/17→								
Brake Pad Set, disc brake								
1.2 1.5	61 - 81 75	07/19→ 06/18→	←	for brake disc diameter [mm]: 266; Brake Size: 14"		**13.0470-3994.2**	**LD3994**	BOS 23599 19,0 - WE / - WK + Zub Ceramic
Brake Disc								
1.2 1.5	61 - 81 75	07/19→ 06/18→	←	Brake Size: 14"		**24.0122-0194.1**	**422194**	Ø 266 Brake Disc Thickness [mm] 22 Minimum thickness [mm] 20 Vented + S
OPEL - FRONTERA A (U92) 03/92→10/98								
Brake Pad Set, disc brake								
2.2 i 2.3 TD 2.4 i 2.5 TDS 2.8 TD	100 74 92 85 83	03/95→10/98 03/92→10/98 03/92→10/98 09/96→10/98 03/95→08/98	→	SV720103→		**13.0460-5927.2**	**605927**	AKE 21875 16,0 + WK
Brake Disc								
2.2 i 2.3 TD 2.4 i 2.5 TDS 2.8 TD	100 74 92 85 83	03/95→10/98 03/92→10/98 03/92→10/98 09/96→10/98 03/95→08/98	→	SV720103→		**24.0118-0122.1**	**418122**	Ø 313.5 Brake Disc Thickness [mm] 18 Minimum thickness [mm] 16.6 Vented
OPEL - FRONTERA A Sport (U92) 03/92→10/98								
Brake Pad Set, disc brake								
2.0 i 2.5 TDS 2.8 TD	85 85 83	03/92→10/98 09/96→10/98 03/95→08/96	→	SV720103→		**13.0460-5927.2**	**605927**	AKE 21875 16,0 + WK
Brake Disc								
2.0 i 2.5 TDS 2.8 TD	85 85 83	03/92→10/98 09/96→10/98 03/95→08/96	→	SV720103→		**24.0118-0122.1**	**418122**	Ø 313.5 Brake Disc Thickness [mm] 18 Minimum thickness [mm] 16.6 Vented
OPEL - FRONTERA B (U99) 09/98→07/04								
Brake Pad Set, disc brake								
2.2 DTI 2.2 i 3.2 i	88 100 151	09/02→07/04 10/98→07/04 10/98→07/04	→	→ 02/04		**13.0460-5927.2**	**605927**	AKE 21875 16,0 + WK
2.2 DTI	85	09/98→12/03	→			**13.0460-5927.2**	**605927**	AKE 21875 16,0 + WK
Brake Disc								
2.2 DTI 2.2 i 3.2 i	88 100 151	09/02→07/04 10/98→07/04 10/98→07/04	→	→ 02/04		**24.0118-0122.1**	**418122**	Ø 313.5 Brake Disc Thickness [mm] 18 Minimum thickness [mm] 16.6 Vented
2.2 DTI	85	09/98→12/03	→			**24.0118-0122.1**	**418122**	Ø 313.5 Brake Disc Thickness [mm] 18 Minimum thickness [mm] 16.6 Vented
OPEL - GRANDLAND / GRANDLAND X (A18, P1UO) 06/17→								
Guide Bolt, brake caliper								
1.2 1.5 Turbo D 1.6 Turbo 1.6 Turbo D 1.6 Turbo Hybrid 1.6 Turbo Hybrid4 2.0 D	96 75 - 96 110 - 133 88 133 - 165 147 - 221 130	06/17→ 04/18→ 09/18→ 06/17→ 12/19→ 06/19→ 11/17→	←	for brake disc diameter [mm]: 304; →Orga 16246		**11.8171-0008.1**	**990049**	ATE
Brake Pad Set, disc brake								
1.2 1.5 Turbo D	96 75 -	06/17→ 04/18→	←	for brake disc diameter [mm]: 304; →Orga 16246		**13.0460-7339.2**	**607339**	ATE + WE / - WK
1.6 Turbo 1.6 Turbo D	96 110 - 133 88	 09/18→ 06/17→	→	for brake disc diameter [mm]: 268; +POC 1F*		**13.0460-3871.2**	**603871**	BOS 25839 17,8 - WE / - WK + Zub

	kW				! #			
OPEL - GRANDLAND / GRANDLAND X (A18, P1UO) 06/17→								
Brake Pad Set, disc brake								
2.0 D	130	11/17→	➡	for brake disc diameter [mm]: 268; +POC 1F*		**13.0470-3871.2**	**LD3871**	BOS 25839 17,8 - WE / - WK + Zub Ceramic
1.6 Turbo Hybrid	133 - 165	12/19→	⬅	for brake disc diameter [mm]: 304; →Orga 16246		**13.0460-7339.2**	**607339**	ATE + WE / - WK
1.6 Turbo Hybrid4	147 - 221	06/19→	➡	for brake disc diameter [mm]: 268		**13.0460-3871.2** **13.0470-3871.2**	**603871** **LD3871**	BOS 25839 17,8 - WE / - WK + Zub BOS 25839 17,8 - WE / - WK + Zub Ceramic
OPEL - GRANDLAND X Van 06/17→								
Guide Bolt, brake caliper								
1.2 1.5 2.0 CDTI	96 96 130	04/18→ 04/18→ 11/17→	⬅	for brake disc diameter [mm]: 304; →Orga 16246		**11.8171-0008.1**	**990049**	ATE
Brake Pad Set, disc brake								
1.2 1.5 2.0 CDTI	96 96 130	04/18→ 04/18→ 11/17→	⬅	for brake disc diameter [mm]: 304; →Orga 16246		**13.0460-7339.2**	**607339**	ATE + WE / - WK
			➡	for brake disc diameter [mm]: 268; +POC 1F*		**13.0460-3871.2** **13.0470-3871.2**	**603871** **LD3871**	BOS 25839 17,8 - WE / - WK + Zub BOS 25839 17,8 - WE / - WK + Zub Ceramic
OPEL - INSIGNIA B Country Tourer (Z18) 06/17→								
Brake Pad Set, disc brake								
1.5 1.6 Turbo 2.0 4x4 2.0 CDTi 2.0 CDTi 4x4	121 147 191 125 125 - 154	06/17→ 06/18→ 06/17→ 06/17→ 06/17→	⬅	+POC J17/J61; Brake Size: 17"		**13.0460-5512.2** **13.0470-5512.2**	**605512** **LD5512**	TRW + WK + Zub TRW + WK + Zub Ceramic
			⬅	+POC J60; Brake Size: 16"		**13.0470-5511.2**	**LD5511**	TRW + WK + Zub Ceramic
OPEL - INSIGNIA B Grand Sport (Z18) 03/17→								
Brake Pad Set, disc brake								
1.4 Turbo 1.5	107 103 - 121	04/20→ 03/17→	⬅	+POC J17/J61; Brake Size: 17"		**13.0460-5512.2** **13.0470-5512.2**	**605512** **LD5512**	TRW + WK + Zub TRW + WK + Zub Ceramic
1.5 CDTi 1.6 CDTi 1.6 Turbo 2.0 2.0 4x4 2.0 CDTi 2.0 CDTi 4x4 2.0 GSi 4x4 2.0 Turbo	90 81 - 100 147 147 191 125 - 128 125 - 154 169 125 - 147	02/20→ 03/17→ 06/18→ 04/20→ 03/17→ 03/17→ 03/17→ 04/20→ 11/20→	⬅	+POC J60; Brake Size: 16"		**13.0470-5511.2**	**LD5511**	TRW + WK + Zub Ceramic
OPEL - INSIGNIA B Sports Tourer (Z18) 03/17→								
Brake Pad Set, disc brake								
1.5	103 - 121	03/17→	⬅	+POC J17/J61; Brake Size: 17"		**13.0460-5512.2** **13.0470-5512.2**	**605512** **LD5512**	TRW + WK + Zub TRW + WK + Zub Ceramic
1.5 CDTi 1.6 CDTi 1.6 Turbo 2.0 2.0 4x4 2.0 CDTi 2.0 CDTi 4x4	90 81 - 100 147 147 169 - 191 125 - 128 125 - 154	02/20→ 03/17→ 06/18→ 04/20→ 03/17→ 03/17→ 03/17→	⬅	+POC J60; Brake Size: 16"		**13.0470-5511.2**	**LD5511**	TRW + WK + Zub Ceramic
OPEL - INSIGNIA B Sports Tourer Combi Van (Z18) 03/17→								
Brake Pad Set, disc brake								
CDTi ECOTEC	100	03/17→	⬅	+POC J17/J61; Brake Size: 17"		**13.0460-5512.2** **13.0470-5512.2**	**605512** **LD5512**	TRW + WK + Zub TRW + WK + Zub Ceramic
			⬅	+POC J60; Brake Size: 16"		**13.0470-5511.2**	**LD5511**	TRW + WK + Zub Ceramic

© 2022 Continental Aftermarket & Services GmbH

	kW				! #			
OPEL - KADETT E (T85) 09/84→12/93								
Guide Bolt, brake caliper								
1.8 1.8 i 2.0 i 2.0 i Cat	84 66 - 85 85 85	09/87→08/90 09/84→05/92 09/87→05/92 03/87→05/92		for brake disc thickness [mm]: 24	2	**11.8171-0008.1**	**990049**	ATE
OPEL - KADETT E Convertible (T85) 10/86→02/93								
Guide Bolt, brake caliper								
2.0 2.0 GSi 2.0 i 2.0 i Cat	110 115 85 85	09/90→05/92 09/90→05/92 10/86→02/93 10/86→02/93		→ 09/91; for brake disc thickness [mm]: 24	2	**11.8171-0008.1**	**990049**	ATE
OPEL - KADETT E Estate (T85) 09/84→08/91								
Guide Bolt, brake caliper								
1.8 E 1.8 i 2.0 i 2.0 i Cat	74 66 - 85 85 85	10/85→08/86 09/84→08/91 09/87→08/91 09/87→08/91		for brake disc thickness [mm]: 24	2	**11.8171-0008.1**	**990049**	ATE
OPEL - KADETT E Estate Van (T85) 08/84→09/93								
Guide Bolt, brake caliper								
1.8 i	66	08/84→09/92		→ 09/91; for brake disc thickness [mm]: 24	2	**11.8171-0008.1**	**990049**	ATE
OPEL - KADETT E Hatchback (T85) 09/84→08/91								
Guide Bolt, brake caliper								
1.8 E 1.8 GSI 1.8 i 2.0 GSI 16V 2.0 GSI 16V Cat	74 85 66 110 - 115 110	10/85→08/86 09/84→08/86 06/85→08/91 12/87→08/91 03/88→08/91		for brake disc thickness [mm]: 24	2	**11.8171-0008.1**	**990049**	ATE
2.0 GSI 2.0 GSI Cat	85 - 95 85	09/86→08/91 09/86→08/91		08/87→; for brake disc thickness [mm]: 24	2	**11.8171-0008.1**	**990049**	ATE
OPEL - KARL (C16) 01/15→03/19								
Wheel Brake Cylinder								
1.0 1.0 LPG	54 - 55 54	01/15→03/19 02/15→03/18	➡		2	**24.3220-1759.3**	**020609**	ALU
OPEL - MERIVA A MPV (X03) 05/03→05/10								
Guide Bolt, brake caliper								
1.3 CDTI 1.6 1.6 16V 1.7 CDTI 1.7 DTI 1.8	51 - 55 77 74 74 - 92 55 92	09/03→05/10 01/06→05/10 05/03→01/06 09/03→05/10 09/03→05/10 05/03→05/10			2	**11.8171-0008.1**	**990049**	ATE
1.4 16V Twinport 1.4 16V Twinport LPG	66 66	07/04→05/10 07/04→05/10		Rim Hole Number: 5	2	**11.8171-0008.1**	**990049**	ATE
OPEL - MERIVA B MPV (S10) 06/10→03/17								
Guide Bolt, brake caliper								
1.3 CDTI 1.4 1.4 LPG 1.6 CDTi 1.6 CDTI 1.7 CDTI	55 - 70 74 - 103 88 100 81 74 - 96	06/10→11/14 06/10→03/17 06/11→03/17 08/13→01/17 03/14→03/17 06/10→01/17			2	**11.8171-0008.1**	**990049**	ATE
1.6 CDTI	70	01/14→01/17		03/14→	2	**11.8171-0008.1**	**990049**	ATE
OPEL - MERIVA B VAN (S10) 06/10→03/17								
Guide Bolt, brake caliper								
1.3 CDTi 1.4 ECOTEC 1.6 CDTi	70 74 81	01/13→11/14 01/13→03/17 03/14→03/17			2	**11.8171-0008.1**	**990049**	ATE

	kW				! #			
OPEL - MERIVA B VAN (S10) 06/10→03/17								
Guide Bolt, brake caliper								
1.7 CDTi	74 - 96	01/13→01/17			2	**11.8171-0008.1**	**990049**	ATE
1.6 CDTi	70	01/14→01/17		03/14→	2	**11.8171-0008.1**	**990049**	ATE
OPEL - MOKKA 06/20→								
Brake Pad Set, disc brake								
MOKKA-e	100	06/20→	➡	+ eFSB		**13.0460-3871.2** **13.0470-3871.2**	**603871** **LD3871**	BOS 25839 17,8 - WE / - WK + Zub BOS 25839 17,8 - WE / - WK + Zub Ceramic
OPEL - MONTEREY A (M92) 08/91→07/98								
Brake Pad Set, disc brake								
3.1 TD 3.2	84 130	09/91→07/98 08/91→03/94	➡			**13.0460-5927.2**	**605927**	AKE 21875 16,0 + WK
Brake Disc								
3.1 TD 3.2	84 130	09/91→07/98 08/91→03/94	➡			**24.0118-0122.1**	**418122**	Ø 313.5 Brake Disc Thickness [mm] 18 Minimum thickness [mm] 16.6 Vented
OPEL - MONTEREY B (M98) 07/98→08/99								
Brake Pad Set, disc brake								
3.0 DTI 3.5 V6 24V	117 158	07/98→08/99 07/98→08/99	➡			**13.0460-5927.2**	**605927**	AKE 21875 16,0 + WK
Brake Disc								
3.0 DTI 3.5 V6 24V	117 158	07/98→08/99 07/98→08/99	➡			**24.0118-0122.1**	**418122**	Ø 313.5 Brake Disc Thickness [mm] 18 Minimum thickness [mm] 16.6 Vented
OPEL - MONZA A (22_) 02/78→08/86								
Guide Bolt, brake caliper								
2.0 E	85	03/83→10/84		E1019586→; for vehicles with air conditioning	2	**11.8171-0008.1**	**990049**	ATE
2.2 E	85	11/84→08/86			2	**11.8171-0008.1**	**990049**	ATE
2.5 E 3.0 GSE	100 - 103 115 - 132	05/81→08/86 02/78→08/86		E1019586→	2	**11.8171-0008.1**	**990049**	ATE
OPEL - OMEGA A (V87) 09/86→05/94								
Guide Bolt, brake caliper								
1.8 1.8 S 2.3 D 2.3 TD Interc.	65 - 85 66 54 74	09/86→03/94 09/86→03/94 10/86→03/94 08/88→03/94	⬅	L1019855→; → 08/93	2	**11.8171-0008.1**	**990049**	ATE
1.8 N 2.3 TD	60 - 63 66	09/86→09/88 10/86→08/88	⬅	L1019855→	2	**11.8171-0008.1**	**990049**	ATE
2.0	73 - 90	09/86→03/94		→ K1000098	2	**11.8171-0008.1**	**990049**	ATE
2.0 i	85	09/86→03/94	⬅	K1000099→; → 08/93	2	**11.8171-0008.1**	**990049**	ATE
2.4 i	92	09/88→03/94	⬅	K1000099→; → 08/93	2	**11.8171-0008.1**	**990049**	ATE
3.0) 3.0) Cat	115 - 130 130	03/87→09/90 03/88→03/94	⬅	→ M1000000	2	**11.8171-0008.1**	**990049**	ATE
OPEL - OMEGA A Estate (V87) 09/86→05/94								
Guide Bolt, brake caliper								
1.8 1.8 S 2.3 D 2.3 TD Interc.	65 - 85 66 54 74	09/86→03/94 09/86→03/94 09/86→03/94 09/88→03/94	⬅	L1019855→; → 08/93	2	**11.8171-0008.1**	**990049**	ATE
1.8 N 2.3 TD	60 - 63 66	09/86→09/88 09/86→08/88	⬅	L1019855→	2	**11.8171-0008.1**	**990049**	ATE
2.0	74 - 90	09/86→04/94		→ K1000098	2	**11.8171-0008.1**	**990049**	ATE
			⬅	K1000099→; → 08/93	2	**11.8171-0008.1**	**990049**	ATE

© 2022 Continental Aftermarket & Services GmbH

	kW				! #			
OPEL - OMEGA A Estate (V87) 09/86→05/94								
Guide Bolt, brake caliper								
2.0 i	73 - 85	09/86→04/94		→ K1000098	2	**11.8171-0008.1**	**990049**	ATE
			←	K1000099→; → 08/93	2	**11.8171-0008.1**	**990049**	ATE
2.4 i	92	09/88→03/94	←	K1000099→; → 08/93	2	**11.8171-0008.1**	**990049**	ATE
3.0	115 - 130	03/87→03/94	←	→ M1000000	2	**11.8171-0008.1**	**990049**	ATE
3.0 Cat	130	03/87→03/94						
OPEL - OMEGA B (V94) 03/94→12/05								
Guide Bolt, brake caliper								
2.0	85	03/94→12/00	←	→ V1999999; not for special-purpose vehicles / not for police vehicles	2	**11.8171-0008.1**	**990049**	ATE
2.0 16V	100	03/94→09/99						
OPEL - OMEGA B Estate (V94) 03/94→07/03								
Guide Bolt, brake caliper								
2.0	85	03/94→09/99	←	→ V1999999; not for special-purpose vehicles / not for police vehicles	2	**11.8171-0008.1**	**990049**	ATE
2.0 16V	100	03/94→09/99						
OPEL - ROCKS-E 10/21→								
Brake Pad Set, disc brake								
Electric	6	10/21→	←			**13.0460-3994.2**	**603994**	BOS 23599 19,0 - WE / - WK + Zub
						13.0470-3994.2	**LD3994**	BOS 23599 19,0 - WE / - WK + Zub Ceramic
Brake Disc								
Electric	6	10/21→	←			**24.0122-0194.1**	**422194**	Ø 266 Brake Disc Thickness [mm] 22 Minimum thickness [mm] 20 Vented + S
Wheel Brake Cylinder								
Electric	6	10/21→	→		2	**24.3220-1743.3**	**020556**	ALU
OPEL - SENATOR A (29_) 02/78→08/87								
Guide Bolt, brake caliper								
2.0 E	85	03/83→10/84		E1019586→; for vehicles with air conditioning	2	**11.8171-0008.1**	**990049**	ATE
2.2 E	85	11/84→08/87			2	**11.8171-0008.1**	**990049**	ATE
2.2 TD	63	11/84→08/87						
2.5	85	05/78→12/80		E1019586→	2	**11.8171-0008.1**	**990049**	ATE
2.5 E	100 - 103	01/83→08/87						
3.0	110 - 115	04/78→08/87						
3.0 E	132	02/78→12/86						
OPEL - SENATOR B (V88) 09/87→09/93								
Guide Bolt, brake caliper								
2.5 i	103	09/90→09/93	←	→ L1999999	2	**11.8171-0008.1**	**990049**	ATE
2.6 i	110	09/90→09/93						
3.0	115 - 130	09/87→09/93						
3.0 i Cat	130	01/88→09/93						
OPEL - SIGNUM Hatchback (Z03) 05/03→12/08								
Spring, brake caliper								
1.8	90	05/03→07/05	←	for vehicles without sports suspension; GG	2	**11.8116-0356.1**	**390586**	ATE
1.9 CDTI	88 - 110	04/04→02/08						
2.2 DTI	92	05/03→04/04	←	51066207→; for vehicles with sports suspension	2	**11.8116-0356.1**	**390586**	ATE
1.8	103	09/05→12/08	←	→ 05/08	2	**11.8116-0356.1**	**390586**	ATE
1.9 CDTI	74	08/05→02/08	←		2	**11.8116-0356.1**	**390586**	ATE
2.0 DTI	74	05/03→04/04	←	for vehicles without sports suspension; GG	2	**11.8116-0356.1**	**390586**	ATE
2.0 Turbo	129	05/03→12/08	←	51066207→; → 05/08	2	**11.8116-0356.1**	**390586**	ATE
2.2 direct	114	05/03→09/08	←	51066207→; → 05/08; for vehicles with sports suspension	2	**11.8116-0356.1**	**390586**	ATE

	kW				! #			
OPEL - SIGNUM Hatchback (Z03) 05/03→12/08								
Spring, brake caliper								
2.2 direct	114	05/03→09/08	←	→ 05/08; for vehicles without sports suspension; GG	2	**11.8116-0356.1**	**390586**	ATE
Guide Bolt, brake caliper								
1.8 1.9 CDTI 2.2 DTI	90 88 - 110 92	05/03→07/05 04/04→02/08 05/03→04/04		41085481→	2	**11.8171-0008.1**	**990049**	ATE
				→ 51066206; for vehicles with sports suspension	2	**11.8171-0008.1**	**990049**	ATE
				→ 41085480	2	**11.8171-0008.1**	**990049**	ATE
				51066207→; for vehicles with sports suspension	2	**11.8171-0008.1**	**990049**	ATE
				for vehicles without sports suspension	2	**11.8171-0008.1**	**990049**	ATE
1.8 2.8 V6 Turbo 3.0 V6 CDTI	103 169 135	09/05→12/08 09/05→12/08 09/05→12/08		→ 05/08	2	**11.8171-0008.1**	**990049**	ATE
1.9 CDTI	74	08/05→02/08			2	**11.8171-0008.1**	**990049**	ATE
2.0 DTI	74	05/03→04/04		41085481→	2	**11.8171-0008.1**	**990049**	ATE
				→ 41085480	2	**11.8171-0008.1**	**990049**	ATE
				for vehicles without sports suspension	2	**11.8171-0008.1**	**990049**	ATE
2.0 Turbo	129	05/03→12/08		41085481→; → 05/08	2	**11.8171-0008.1**	**990049**	ATE
				51066207→; → 05/08	2	**11.8171-0008.1**	**990049**	ATE
				→ 41085480	2	**11.8171-0008.1**	**990049**	ATE
				→ 51066206	2	**11.8171-0008.1**	**990049**	ATE
2.2 direct	114	05/03→09/08		41085481→; → 05/08	2	**11.8171-0008.1**	**990049**	ATE
				→ 51066206; for vehicles with sports suspension	2	**11.8171-0008.1**	**990049**	ATE
				→ 05/08; for vehicles without sports suspension	2	**11.8171-0008.1**	**990049**	ATE
				51066207→; → 05/08; for vehicles with sports suspension	2	**11.8171-0008.1**	**990049**	ATE
				→ 41085480	2	**11.8171-0008.1**	**990049**	ATE
2.8 V6 Turbo	184	01/06→12/08		03/06→ 05/08	2	**11.8171-0008.1**	**990049**	ATE
3.0 V6 CDTI 3.2 V6	130 155	05/03→07/05 05/03→07/05		→ 41085480	2	**11.8171-0008.1**	**990049**	ATE
				41085481→	2	**11.8171-0008.1**	**990049**	ATE
				31068239→ 51999999	2	**11.8171-0008.1**	**990049**	ATE
				→ 31068238	2	**11.8171-0008.1**	**990049**	ATE
OPEL - TIGRA (S93) 07/94→12/00								
Guide Bolt, brake caliper								
1.4 16V 1.6 16V	63 - 66 74 - 78	07/94→12/00 07/94→08/98	←		2	**11.8171-0008.1**	**990049**	ATE
OPEL - VECTRA A (J89) 08/88→12/95								
Guide Bolt, brake caliper								
1.4 S 1.6	55 51 - 60	09/88→06/92 09/88→07/93	←	N1038530→	2	**11.8171-0008.1**	**990049**	ATE
			←	N5000001→	2	**11.8171-0008.1**	**990049**	ATE
1.6 i	52 - 55	09/88→11/95	←	N1038530→; → 08/95	2	**11.8171-0008.1**	**990049**	ATE
			←	N5000001→; → 08/95	2	**11.8171-0008.1**	**990049**	ATE
1.7 D 1.8 S	42 65 - 66	10/88→09/92 09/88→10/90		S1000001→	2	**11.8171-0008.1**	**990049**	ATE
				S5000001→	2	**11.8171-0008.1**	**990049**	ATE
			←	N1038530→ R1999999	2	**11.8171-0008.1**	**990049**	ATE
			←	N5000001→ R5999999	2	**11.8171-0008.1**	**990049**	ATE
1.7 D 1.8 i Cat	44 66	07/92→11/95 03/90→11/95		S1000001→; → 08/95	2	**11.8171-0008.1**	**990049**	ATE
				S5000001→; → 08/95	2	**11.8171-0008.1**	**990049**	ATE
			←	N1038530→ R1999999	2	**11.8171-0008.1**	**990049**	ATE
			←	N5000001→ R5999999	2	**11.8171-0008.1**	**990049**	ATE
1.7 TD	60	03/90→11/95		S1000001→; → 08/95	2	**11.8171-0008.1**	**990049**	ATE
			←	N1038530→ R1999999	2	**11.8171-0008.1**	**990049**	ATE
			←	N5000001→ R5999999	2	**11.8171-0008.1**	**990049**	ATE
1.8 S 4x4 2.0 i 4x4	65 85 - 95	01/89→07/89 01/89→07/92	←		2	**11.8171-0008.1**	**990049**	ATE
2.0	74	09/88→09/89			2	**11.8171-0008.1**	**990049**	ATE

© 2022 Continental Aftermarket & Services GmbH

	kW				! #			
OPEL - VECTRA A (J89) 08/88→12/95								
Guide Bolt, brake caliper								
2.0 i 2.0 i 16V 2000/GT 16V	85 - 95 100 110	09/88→09/92 08/92→08/95 01/89→06/94			2	**11.8171-0008.1**	**990049**	ATE
2.0 i 16V 4x4	100	06/94→11/95		→ 08/95	2	**11.8171-0008.1**	**990049**	ATE
			←	→ 08/95	2	**11.8171-0008.1**	**990049**	ATE
2.0 i Cat 2000/GT 16V Cat	85 110	09/88→11/95 02/90→11/95		→ 08/95	2	**11.8171-0008.1**	**990049**	ATE
2.0 i Cat 4x4 2.0 i Turbo 4x4 2.5 V6 2000/GT 16V Cat 4x4	85 150 125 110	01/89→11/95 06/94→11/95 02/93→11/95 02/90→11/95	←	→ 08/95	2	**11.8171-0008.1**	**990049**	ATE
2000 16V 4x4	110	01/89→10/90			2	**11.8171-0008.1**	**990049**	ATE
			←		2	**11.8171-0008.1**	**990049**	ATE
OPEL - VECTRA A Hatchback (J89) 04/88→12/95								
Guide Bolt, brake caliper								
1.4 S 1.6 1.6 S	55 51 60	04/88→06/92 08/92→07/93 09/88→05/93	←	N1038530→	2	**11.8171-0008.1**	**990049**	ATE
			←	N5000001→	2	**11.8171-0008.1**	**990049**	ATE
1.6 i 1.6 i Cat	52 - 55 55	09/93→11/95 09/88→11/95	←	N1038530→; → 08/95	2	**11.8171-0008.1**	**990049**	ATE
			←	N5000001→; → 08/95	2	**11.8171-0008.1**	**990049**	ATE
1.7 D 1.8 i 1.8 S	42 66 65	09/88→09/92 09/88→10/90 09/88→07/89		S1000001→	2	**11.8171-0008.1**	**990049**	ATE
				S5000001→	2	**11.8171-0008.1**	**990049**	ATE
			←	N1038530→ R1999999	2	**11.8171-0008.1**	**990049**	ATE
			←	N5000001→ R5999999	2	**11.8171-0008.1**	**990049**	ATE
1.7 D 1.8 i Cat	44 66	07/92→11/95 03/90→11/95		S1000001→; → 08/95	2	**11.8171-0008.1**	**990049**	ATE
				S5000001→; → 08/95	2	**11.8171-0008.1**	**990049**	ATE
			←	N1038530→ R1999999	2	**11.8171-0008.1**	**990049**	ATE
			←	N5000001→ R5999999	2	**11.8171-0008.1**	**990049**	ATE
1.7 TD	60	03/90→11/95		S1000001→; → 08/95	2	**11.8171-0008.1**	**990049**	ATE
			←	N1038530→ R1999999	2	**11.8171-0008.1**	**990049**	ATE
			←	N5000001→ R5999999	2	**11.8171-0008.1**	**990049**	ATE
2.0	74	04/88→09/89		09/88→	2	**11.8171-0008.1**	**990049**	ATE
2.0 i 2.0 i 16V	85 100 - 110	09/88→10/90 02/89→08/95			2	**11.8171-0008.1**	**990049**	ATE
2.0 i 16V Cat 2.0 i Cat 2.0 i GT	110 85 95	02/90→11/95 09/88→11/95 09/88→11/95		→ 08/95	2	**11.8171-0008.1**	**990049**	ATE
2.5 V6	125	02/93→11/95	←	→ 08/95	2	**11.8171-0008.1**	**990049**	ATE
OPEL - VECTRA B (J96) 09/95→07/04								
Guide Bolt, brake caliper								
1.6 GL	60	09/95→08/96		→ W7999999	2	**11.8171-0008.1**	**990049**	ATE
1.6 i 1.6 i 16V 1.8 i 16V 2.0 DI 16V 2.0 DTI 16V	55 74 85 - 92 60 74	10/95→04/02 10/95→04/02 10/95→04/02 11/96→04/02 06/97→04/02	←	X1000001→	2	**11.8171-0008.1**	**990049**	ATE
1.7 TD	60	10/95→12/98		→ 11/96	2	**11.8171-0008.1**	**990049**	ATE
2.0 i 2.0 i 16V 2.2 DTI 16V 2.2 i 16V 2.5 i V6 2.6 i V6 i 500 2.5	82 100 88 - 92 102 - 108 125 125 143	10/95→04/02 09/95→06/00 09/00→04/02 07/00→07/02 10/95→09/00 09/00→04/02 05/98→09/00	←		2	**11.8171-0008.1**	**990049**	ATE
OPEL - VECTRA B Estate (J96) 11/96→07/03								
Guide Bolt, brake caliper								
1.6 i 1.8 i 16V 2.0 DI 16V	55 85 60	11/96→06/00 11/96→09/00 11/96→06/00		→ W7999999	2	**11.8171-0008.1**	**990049**	ATE
			←	X1000001→	2	**11.8171-0008.1**	**990049**	ATE
1.6 i 16V 1.8 i 16V 2.0 DTI 16V	74 92 74	11/96→07/02 09/00→07/03 06/97→07/03		→ W7999999	2	**11.8171-0008.1**	**990049**	ATE
			←	X1000001→; → 04/02	2	**11.8171-0008.1**	**990049**	ATE
1.7 TD	60	11/96→12/97		→ 11/96	2	**11.8171-0008.1**	**990049**	ATE

© 2022 Continental Aftermarket & Services GmbH

	kW				! #			
OPEL - VECTRA B Estate (J96) 11/96→07/03								
Guide Bolt, brake caliper								
2.0 i 2.0 i 16V 2.2 DTI 16V 2.5 i V6 i 500 2.5	82 85 - 100 88 125 143	11/96→02/02 11/96→07/03 09/00→04/02 11/96→09/00 05/98→09/00	←		2	**11.8171-0008.1**	**990049**	ATE
2.2 DTI 16V 2.2 i 16V 2.6 i V6	92 102 - 108 125	09/00→07/03 07/00→07/03 09/00→07/03	←	→ 04/02	2	**11.8171-0008.1**	**990049**	ATE
OPEL - VECTRA B Hatchback (J96) 09/95→07/03								
Guide Bolt, brake caliper								
1.6 i 1.6 i 16V 1.8 i 16V 2.0 DTI 16V	55 74 92 74	10/95→07/03 10/95→07/02 09/00→07/03 06/97→07/03		→ W7999999	2	**11.8171-0008.1**	**990049**	ATE
			←	X1000001→; → 04/02	2	**11.8171-0008.1**	**990049**	ATE
1.7 TD	60	10/95→12/98		→ 11/96	2	**11.8171-0008.1**	**990049**	ATE
1.8 FlexFuel 1.8 i 16V 2.0 DI 16V	85 85 60	01/99→09/00 10/95→09/00 11/96→06/00		→ W7999999	2	**11.8171-0008.1**	**990049**	ATE
			←	X1000001→	2	**11.8171-0008.1**	**990049**	ATE
2.0 i 2.0 i 16V 2.2 DTI 16V 2.5 2.5 i V6	82 85 - 100 88 144 125	10/95→02/02 09/95→07/03 09/00→04/02 10/99→06/00 10/95→09/00	←		2	**11.8171-0008.1**	**990049**	ATE
2.2 DTI 16V 2.2 i 16V 2.6 i V6	92 102 - 108 125	09/00→07/03 07/00→07/03 09/00→07/03	←	→ 04/02	2	**11.8171-0008.1**	**990049**	ATE
OPEL - VECTRA C (Z02) 04/02→01/09								
Spring, brake caliper								
1.6 1.6 16V 1.9 CDTI 2.0 DTI 16V	77 74 110 74	08/05→08/08 07/04→10/05 04/04→08/08 04/02→08/06	←	GG	2	**11.8116-0356.1**	**390586**	ATE
1.8 1.8 16V 2.2 DGi 2.2 DTI 16V	81 90 114 86 - 92	04/02→07/08 04/02→09/08 10/03→08/08 04/02→12/04	←	for vehicles without sports suspension; GG	2	**11.8116-0356.1**	**390586**	ATE
1.8	103	08/05→08/08	←	for vehicles with sports suspension; GG	2	**11.8116-0356.1**	**390586**	ATE
			←	for vehicles with sports suspension; for police vehicles	2	**11.8116-0356.1**	**390586**	ATE
1.9 CDTI	74	10/05→08/08	←	61000001→	2	**11.8116-0356.1**	**390586**	ATE
1.9 CDTI	88	04/04→01/09	←	→ 10/08; GG	2	**11.8116-0356.1**	**390586**	ATE
2.2 16V	108	04/02→12/08	←	for vehicles without sports suspension; → 10/08; GG	2	**11.8116-0356.1**	**390586**	ATE
Guide Bolt, brake caliper								
1.6	77	08/05→08/08			2	**11.8171-0008.1**	**990049**	ATE
					2	**11.8171-0008.1**	**990049**	ATE
				Internally Vented	2	**11.8171-0008.1**	**990049**	ATE
1.6 16V 1.8 1.8 16V 1.9 CDTI 2.0 16V Turbo 2.0 DTI 16V 2.2 DGi 2.2 DTI 16V	74 81 90 110 129 74 114 86 - 92	07/04→10/05 04/02→07/08 04/02→09/08 04/04→08/08 03/03→08/08 04/02→08/06 10/03→08/08 04/02→12/04			2	**11.8171-0008.1**	**990049**	ATE
					2	**11.8171-0008.1**	**990049**	ATE
				Vented	2	**11.8171-0008.1**	**990049**	ATE
1.8	103	08/05→08/08			2	**11.8171-0008.1**	**990049**	ATE
				Internally Vented	2	**11.8171-0008.1**	**990049**	ATE
				for vehicles with sports suspension	2	**11.8171-0008.1**	**990049**	ATE
				for vehicles with sports suspension; for police vehicles	2	**11.8171-0008.1**	**990049**	ATE
1.9 CDTI 3.0 CDTi	74 135	10/05→08/08 08/05→08/08			2	**11.8171-0008.1**	**990049**	ATE
				Internally Vented	2	**11.8171-0008.1**	**990049**	ATE
				61000001→	2	**11.8171-0008.1**	**990049**	ATE
1.9 CDTI 2.2 16V	88 108	04/04→01/09 04/02→12/08		→ 10/08	2	**11.8171-0008.1**	**990049**	ATE
				→ 10/08	2	**11.8171-0008.1**	**990049**	ATE

© 2022 Continental Aftermarket & Services GmbH

	kW				! #			
OPEL - VECTRA C (Z02) 04/02→01/09								
Guide Bolt, brake caliper								
1.9 CDTI 2.2 16V	88 108	04/04→01/09 04/02→12/08		Vented; → 10/08	2	**11.8171-0008.1**	**990049**	ATE
2.8 V6 Turbo	169 - 184	08/05→08/08			2	**11.8171-0008.1**	**990049**	ATE
				Internally Vented	2	**11.8171-0008.1**	**990049**	ATE
				61000001→; - OPC / -VXR	2	**11.8171-0008.1**	**990049**	ATE
				61000001→; + OPC / +VXR	2	**11.8171-0008.1**	**990049**	ATE
2.8 V6 Turbo 2.8 V6 Turbo OPC	188 206	08/05→09/06 09/06→08/08			2	**11.8171-0008.1**	**990049**	ATE
				61000001→	2	**11.8171-0008.1**	**990049**	ATE
3.0 CDTI 3.2 V6	130 155	02/03→07/05 08/02→07/06			2	**11.8171-0008.1**	**990049**	ATE
				Vented	2	**11.8171-0008.1**	**990049**	ATE
				→ 31070293	2	**11.8171-0008.1**	**990049**	ATE
				31070294→	2	**11.8171-0008.1**	**990049**	ATE
OPEL - VECTRA C Estate (Z02) 10/03→01/09								
Spring, brake caliper								
1.6	77	12/05→08/08	←	06/06→; GG	2	**11.8116-0356.1**	**390586**	ATE
1.6 16V 1.9 CDTI 2.0 DTI	74 110 74	06/04→09/05 04/04→08/08 10/03→08/05	←	GG	2	**11.8116-0356.1**	**390586**	ATE
1.8 2.2 direct 2.2 DTI	90 114 92	10/03→09/06 10/03→08/08 10/03→12/05	←	for vehicles without sports suspension; GG	2	**11.8116-0356.1**	**390586**	ATE
1.8	103	08/05→08/08		for vehicles with sports suspension; for police vehicles	2	**11.8116-0356.1**	**390586**	ATE
			←	for vehicles with sports suspension; not for police vehicles; GG	2	**11.8116-0356.1**	**390586**	ATE
1.9 CDTI	74	06/05→08/08		for vehicles with sports suspension; for police vehicles	2	**11.8116-0356.1**	**390586**	ATE
			←	61000001→; for vehicles without sports suspension; not for police vehicles; GG	2	**11.8116-0356.1**	**390586**	ATE
1.9 CDTI	88	04/04→01/09		→ 10/08; for vehicles with sports suspension; for police vehicles	2	**11.8116-0356.1**	**390586**	ATE
			←	→ 10/08; for vehicles without sports suspension; not for police vehicles; GG	2	**11.8116-0356.1**	**390586**	ATE
Guide Bolt, brake caliper								
1.6	77	12/05→08/08		41085481→	2	**11.8171-0008.1**	**990049**	ATE
				06/06→	2	**11.8171-0008.1**	**990049**	ATE
				06/06→; → 41085480	2	**11.8171-0008.1**	**990049**	ATE
				06/06→; → 41085480; Internally Vented	2	**11.8171-0008.1**	**990049**	ATE
1.6 16V 1.8 1.9 CDTI 2.0 DTI 2.0 Turbo 2.2 direct 2.2 DTI	74 90 110 74 129 114 92	06/04→09/05 10/03→09/06 04/04→08/08 10/03→08/05 10/03→08/08 10/03→08/08 10/03→12/05		41085481→	2	**11.8171-0008.1**	**990049**	ATE
					2	**11.8171-0008.1**	**990049**	ATE
				→ 41085480	2	**11.8171-0008.1**	**990049**	ATE
				Vented; → 41085480	2	**11.8171-0008.1**	**990049**	ATE
1.8	103	08/05→08/08		→ 41085480	2	**11.8171-0008.1**	**990049**	ATE
				41085481→	2	**11.8171-0008.1**	**990049**	ATE
				→ 41085480; Internally Vented	2	**11.8171-0008.1**	**990049**	ATE
				for vehicles with sports suspension; for police vehicles	2	**11.8171-0008.1**	**990049**	ATE
				for vehicles with sports suspension; not for police vehicles	2	**11.8171-0008.1**	**990049**	ATE
1.9 CDTI	74	06/05→08/08		61000001→; for vehicles without sports suspension; not for police vehicles	2	**11.8171-0008.1**	**990049**	ATE
				41085481→	2	**11.8171-0008.1**	**990049**	ATE
				→ 41085480	2	**11.8171-0008.1**	**990049**	ATE
				for vehicles with sports suspension; for police vehicles	2	**11.8171-0008.1**	**990049**	ATE
				→ 41085480; Internally Vented	2	**11.8171-0008.1**	**990049**	ATE
1.9 CDTI	88	04/04→01/09		Vented; → 41085480	2	**11.8171-0008.1**	**990049**	ATE
				41085481→; → 10/08	2	**11.8171-0008.1**	**990049**	ATE
				→ 41085480	2	**11.8171-0008.1**	**990049**	ATE
				→ 10/08; for vehicles without sports suspension; not for police vehicles	2	**11.8171-0008.1**	**990049**	ATE

	kW				! #			
OPEL - VECTRA C Estate (Z02) 10/03→01/09								
Guide Bolt, brake caliper								
1.9 CDTI	88	04/04→01/09		→ 10/08; for vehicles with sports suspension; for police vehicles	2	**11.8171-0008.1**	**990049**	ATE
2.8 V6 Turbo	169	08/05→10/08		41085481→	2	**11.8171-0008.1**	**990049**	ATE
				61000001→	2	**11.8171-0008.1**	**990049**	ATE
2.8 V6 Turbo	184	08/05→08/08			2	**11.8171-0008.1**	**990049**	ATE
				41085481→	2	**11.8171-0008.1**	**990049**	ATE
2.8 V6 Turbo	188	08/05→09/08			2	**11.8171-0008.1**	**990049**	ATE
				61000001→	2	**11.8171-0008.1**	**990049**	ATE
2.8 V6 Turbo	206	07/06→08/08			2	**11.8171-0008.1**	**990049**	ATE
3.0 V6 CDTI 3.2 V6	130 155	10/03→07/05 10/03→07/05		31070294→	2	**11.8171-0008.1**	**990049**	ATE
				41085481→	2	**11.8171-0008.1**	**990049**	ATE
				→ 41085480	2	**11.8171-0008.1**	**990049**	ATE
				→ 31070293	2	**11.8171-0008.1**	**990049**	ATE
				Vented; → 41085480	2	**11.8171-0008.1**	**990049**	ATE
3.0 V6 CDTI	135	08/05→08/08		41085481→	2	**11.8171-0008.1**	**990049**	ATE
					2	**11.8171-0008.1**	**990049**	ATE
				→ 41085480; Internally Vented	2	**11.8171-0008.1**	**990049**	ATE
				→ 41085480	2	**11.8171-0008.1**	**990049**	ATE
OPEL - VECTRA C GTS (Z02) 08/02→01/09								
Spring, brake caliper								
1.6 1.9 CDTI 2.0 DTI 16V	74 - 77 110 74	08/05→08/08 04/04→08/08 08/02→08/05	←	GG	2	**11.8116-0356.1**	**390586**	ATE
1.8	103	08/05→08/08	←	for vehicles with sports suspension; GG	2	**11.8116-0356.1**	**390586**	ATE
			←	for vehicles with sports suspension; for police vehicles	2	**11.8116-0356.1**	**390586**	ATE
1.8 16V 2.2 16V 2.2 DGi 2.2 DTI 16V	81 - 90 108 114 86 - 92	08/02→09/08 08/02→08/08 10/03→08/08 08/02→06/08	←	for vehicles without sports suspension; GG	2	**11.8116-0356.1**	**390586**	ATE
1.9 CDTI	74	06/05→08/08	←	61000001→	2	**11.8116-0356.1**	**390586**	ATE
1.9 CDTI	88	04/04→01/09	←	→ 10/08; GG	2	**11.8116-0356.1**	**390586**	ATE
Guide Bolt, brake caliper								
1.6	74 - 77	08/05→08/08			2	**11.8171-0008.1**	**990049**	ATE
					2	**11.8171-0008.1**	**990049**	ATE
				Internally Vented	2	**11.8171-0008.1**	**990049**	ATE
1.8	103	08/05→08/08			2	**11.8171-0008.1**	**990049**	ATE
				Internally Vented	2	**11.8171-0008.1**	**990049**	ATE
				for vehicles with sports suspension	2	**11.8171-0008.1**	**990049**	ATE
				for vehicles with sports suspension; for police vehicles	2	**11.8171-0008.1**	**990049**	ATE
1.8 16V	81 - 90	08/02→09/08			2	**11.8171-0008.1**	**990049**	ATE
1.9 CDTI 2.0 16V Turbo 2.0 DTI 16V 2.2 16V 2.2 DGi 2.2 DTI 16V	110 129 74 108 114 86 - 92	04/04→08/08 03/03→08/08 08/02→08/05 08/02→08/08 10/03→08/08 08/02→06/08			2	**11.8171-0008.1**	**990049**	ATE
				Vented	2	**11.8171-0008.1**	**990049**	ATE
1.9 CDTI 3.0 CDTi	74 135	06/05→08/08 08/05→08/08			2	**11.8171-0008.1**	**990049**	ATE
				Internally Vented	2	**11.8171-0008.1**	**990049**	ATE
				61000001→	2	**11.8171-0008.1**	**990049**	ATE
1.9 CDTI	88	04/04→01/09		→ 10/08	2	**11.8171-0008.1**	**990049**	ATE
				→ 10/08	2	**11.8171-0008.1**	**990049**	ATE
				Vented; → 10/08	2	**11.8171-0008.1**	**990049**	ATE
2.8 V6 Turbo	169 - 184	08/05→08/08			2	**11.8171-0008.1**	**990049**	ATE
				Internally Vented	2	**11.8171-0008.1**	**990049**	ATE
				61000001→; - OPC / -VXR	2	**11.8171-0008.1**	**990049**	ATE
				61000001→; + OPC / +VXR	2	**11.8171-0008.1**	**990049**	ATE
2.8 V6 Turbo	188 - 206	08/05→09/08			2	**11.8171-0008.1**	**990049**	ATE
				61000001→	2	**11.8171-0008.1**	**990049**	ATE

© 2022 Continental Aftermarket & Services GmbH

	kW				! #			
OPEL - VECTRA C GTS (Z02) 08/02→01/09								
Guide Bolt, brake caliper								
3.0 CDTI	130	06/03→07/05			2	**11.8171-0008.1**	**990049**	ATE
3.2 V6	155	08/02→07/06		Vented	2	**11.8171-0008.1**	**990049**	ATE
				→ 31070293	2	**11.8171-0008.1**	**990049**	ATE
				31070294→	2	**11.8171-0008.1**	**990049**	ATE
OPEL - ZAFIRA / ZAFIRA FAMILY B (A05) 07/05→05/19								
Spring, brake caliper								
2.0	177	01/06→12/10	←		2	**11.8116-0356.1**	**390586**	ATE
Guide Bolt, brake caliper								
1.6	77 - 85	07/05→04/15			2	**11.8171-0008.1**	**990049**	ATE
1.6 CNG	69	07/05→04/15						
1.6 CNG Turbo	110	04/10→04/15						
1.6 FlexFuel	85	08/08→12/12						
1.9 CDTI	74 - 110	07/05→04/15						
2.0	147 - 177	07/05→12/10						
2.2	110	07/05→12/12						
1.7 CDTI	81 - 92	03/07→04/15		for brake disc diameter [mm]: 280	2	**11.8171-0008.1**	**990049**	ATE
1.8	88 - 103	07/05→04/15		for brake disc diameter [mm]: 308	2	**11.8171-0008.1**	**990049**	ATE
1.8 LPG	103	07/09→04/15						
OPEL - ZAFIRA A MPV (T98) 04/99→06/05								
Guide Bolt, brake caliper								
1.6	76	10/03→06/05	←		2	**11.8171-0008.1**	**990049**	ATE
1.6 16V	74	04/99→06/05						
1.6 CNG	71	09/01→06/05						
1.6 LPG	74 - 76	04/99→06/05						
1.8 16V	85 - 92	04/99→06/05						
2.0 DTI 16V	74	09/00→06/05						
2.0 OPC	141 - 147	09/01→06/05						
2.2 16V	108	09/00→06/05						
2.2 DTI 16V	86 - 92	01/02→06/05						
2.0 DI 16V	60	07/99→06/05	←	10/99→	2	**11.8171-0008.1**	**990049**	ATE
OPEL - ZAFIRA B Box Body/MPV (A05) 07/05→04/15								
Guide Bolt, brake caliper								
1.6 CNG Turbo VAN	110	02/09→04/15			2	**11.8171-0008.1**	**990049**	ATE
1.6 CNG VAN	69	07/05→04/15		for brake disc diameter [mm]: 308	2	**11.8171-0008.1**	**990049**	ATE
1.7 CDTI VAN	81 - 92	01/08→04/15		for brake disc diameter [mm]: 280	2	**11.8171-0008.1**	**990049**	ATE
1.8 VAN	103	07/05→04/15						
1.9 CDTI VAN	88 - 110	07/05→04/15						
2.0 VAN	147	07/05→12/10						
2.2 DGi VAN	110	07/05→12/11						
OPEL - ZAFIRA TOURER C (P12) 10/11→								
Brake Hose								
1.4	88 - 103	10/11→	←	Rim Size [in]: 16;		**24.5176-0415.3**	**331618**	L= 415
1.4 LPG	103	10/11→	←	Rim Size [in]: 17;		**24.5176-0444.3**	**331619**	L= 445
1.6	100 - 125	12/12→						
1.6 CDTI	88 - 100	02/13→						
1.6 CNG	110	10/11→						
1.6 SIDI	147	07/13→						
1.8	85 - 103	10/11→						
2.0 BiTurbo CDTI	143	01/13→						
2.0 CDTi	81 - 125	10/11→						
OPEL - ZAFIRA TOURER C VAN (P12) 10/11→								
Brake Hose								
2.0 CDTi	81 - 121	01/12→	←	Rim Size [in]: 16;		**24.5176-0415.3**	**331618**	L= 415

	kW				! #			
OPEL - ZAFIRA TOURER C VAN (P12) 10/11→								
Brake Hose								
2.0 CDTi	81 - 121	01/12→	←	Rim Size [in]: 17;		**24.5176-0444.3**	**331619**	L= 445
PEUGEOT - 106 I (1A, 1C) 08/91→04/96								
Guide Bolt, brake caliper								
1.3 1.6	72 76	10/93→04/96 11/94→04/96		S 51132347→	2	**11.8171-0008.1**	**990049**	ATE
1.4 1.4 D 1.5 D 1.6	51 - 55 37 40 - 43 65	08/91→04/96 09/92→04/96 06/94→04/96 06/93→04/96		S 51132347→; + ABS	2	**11.8171-0008.1**	**990049**	ATE
PEUGEOT - 106 II (1A_, 1C_) 04/96→05/05								
Guide Bolt, brake caliper								
1.6 i 1.6 S16	74 88	05/96→01/01 04/98→09/01			2	**11.8171-0008.1**	**990049**	ATE
1.6 S16	87	05/96→07/04		→ 03/04	2	**11.8171-0008.1**	**990049**	ATE
PEUGEOT - 106 Van I Hatchback Van (1S_) 08/91→03/96								
Guide Bolt, brake caliper								
1.4 D	37	08/91→03/96		S 51132347→; + ABS	2	**11.8171-0008.1**	**990049**	ATE
PEUGEOT - 108 05/14→								
Brake Master Cylinder								
1.0 VTi 1.0 VTi 72 1.2	51 53 60	05/14→ 05/18→ 05/14→		for left-hand drive vehicles; - ESP		**24.4120-1712.3**	**011092**	Ø 20.6 without brake fluid reservoir
PEUGEOT - 205 I Convertible (741B, 20D) 03/86→11/95								
Guide Bolt, brake caliper								
1.9 CTi	92	08/90→07/92		09/90→	2	**11.8171-0008.1**	**990049**	ATE
PEUGEOT - 205 II (20A/C) 01/87→12/00								
Guide Bolt, brake caliper								
1.8 TD	57	01/90→09/98		06/93→	2	**11.8171-0008.1**	**990049**	ATE
1.8 XDT	58	08/90→05/97			2	**11.8171-0008.1**	**990049**	ATE
1.9 GTI	88 - 94	10/87→09/98		09/90→	2	**11.8171-0008.1**	**990049**	ATE
PEUGEOT - 206 CC (2D) 09/00→12/08								
Brake Pad Set, disc brake								
1.6 1.6 16V	81 80	09/01→12/08 09/00→12/07	←	09079→ 10949		**13.0460-3994.2** **13.0470-3994.2**	**603994** **LD3994**	BOS 23599 19,0 - WE / - WK + Zub BOS 23599 19,0 - WE / - WK + Zub Ceramic
1.6 HDi 110	80	04/05→02/07	←	→ 01/07		**13.0460-3994.2** **13.0470-3994.2**	**603994** **LD3994**	BOS 23599 19,0 - WE / - WK + Zub BOS 23599 19,0 - WE / - WK + Zub Ceramic
2.0 S16	100	09/00→12/07	←	Orga 09079→; → 01/07		**13.0460-3994.2** **13.0470-3994.2**	**603994** **LD3994**	BOS 23599 19,0 - WE / - WK + Zub BOS 23599 19,0 - WE / - WK + Zub Ceramic
Brake Disc								
1.6 1.6 16V 2.0 S16	81 80 100	09/01→12/08 09/00→12/07 09/00→12/07	←	Orga 09079→; → 01/07		**24.0122-0194.1**	**422194**	Ø 266 Brake Disc Thickness [mm] 22 Minimum thickness [mm] 20 Vented + S
1.6 HDi 110	80	04/05→02/07	←	→ 01/07		**24.0122-0194.1**	**422194**	Ø 266 Brake Disc Thickness [mm] 22 Minimum thickness [mm] 20 Vented + S
PEUGEOT - 206 Hatchback (2A/C) 08/98→12/12								
Brake Pad Set, disc brake								
1.4 16V 1.6 HDi 110	65 80	10/03→02/08 05/04→02/07	←			**13.0460-3994.2**	**603994**	BOS 23599 19,0 - WE / - WK + Zub

© 2022 Continental Aftermarket & Services GmbH

	kW				! #			
PEUGEOT - 206 Hatchback (2A/C) 08/98→12/12								
Brake Pad Set, disc brake								
1.4 16V 1.6 HDi 110	65 80	10/03→02/08 05/04→02/07				**13.0470-3994.2**	**LD3994**	BOS 23599 19,0 - WE / - WK + Zub Ceramic
1.6 1.6 16V 1.6 Flex 2.0 S16	81 79 83 100	05/05→07/08 06/01→04/09 05/05→07/08 06/99→12/07		Orga 09079→		**13.0460-3994.2** **13.0470-3994.2**	**603994** **LD3994**	BOS 23599 19,0 - WE / - WK + Zub BOS 23599 19,0 - WE / - WK + Zub Ceramic
1.6 16V 1.6 BiFuel 2.0 HDI 90	80 80 66	07/00→04/09 07/00→04/09 12/99→09/09		Orga 09079→; → 02/09		**13.0460-3994.2** **13.0470-3994.2**	**603994** **LD3994**	BOS 23599 19,0 - WE / - WK + Zub BOS 23599 19,0 - WE / - WK + Zub Ceramic
Brake Disc								
1.4 16V 1.6 HDi 110	65 80	10/03→02/08 05/04→02/07				**24.0122-0194.1**	**422194**	Ø 266 Brake Disc Thickness [mm] 22 Minimum thickness [mm] 20 Vented + S
1.6 1.6 16V 1.6 Flex 2.0 S16	81 79 83 100	05/05→07/08 06/01→04/09 05/05→07/08 06/99→12/07		Orga 09079→		**24.0122-0194.1**	**422194**	Ø 266 Brake Disc Thickness [mm] 22 Minimum thickness [mm] 20 Vented + S
1.6 16V 1.6 BiFuel 2.0 HDI 90	80 80 66	07/00→04/09 07/00→04/09 12/99→09/09		Orga 09079→; → 02/09		**24.0122-0194.1**	**422194**	Ø 266 Brake Disc Thickness [mm] 22 Minimum thickness [mm] 20 Vented + S
PEUGEOT - 206 Saloon 03/07→								
Brake Pad Set, disc brake								
1.6 16V	80	03/07→		Orga 09079→; → 02/09		**13.0460-3994.2** **13.0470-3994.2**	**603994** **LD3994**	BOS 23599 19,0 - WE / - WK + Zub BOS 23599 19,0 - WE / - WK + Zub Ceramic
Brake Disc								
1.6 16V	80	03/07→		Orga 09079→; → 02/09		**24.0122-0194.1**	**422194**	Ø 266 Brake Disc Thickness [mm] 22 Minimum thickness [mm] 20 Vented + S
PEUGEOT - 206 SW (2E/K) 07/02→								
Brake Pad Set, disc brake								
1.4 16V 1.6 HDi 110	65 80	10/03→ 05/04→		→ 05/07		**13.0460-3994.2** **13.0470-3994.2**	**603994** **LD3994**	BOS 23599 19,0 - WE / - WK + Zub BOS 23599 19,0 - WE / - WK + Zub Ceramic
1.6 1.6 16V 1.6 Flex 1.6 LPG 2.0 HDi	81 80 81 - 83 80 66	05/05→07/08 07/02→ 05/05→07/08 07/02→02/07 07/02→02/07		→Orga 10808		**13.0460-3994.2** **13.0470-3994.2**	**603994** **LD3994**	BOS 23599 19,0 - WE / - WK + Zub BOS 23599 19,0 - WE / - WK + Zub Ceramic
2.0 16V	100	07/02→02/07				**13.0460-3994.2** **13.0470-3994.2**	**603994** **LD3994**	BOS 23599 19,0 - WE / - WK + Zub BOS 23599 19,0 - WE / - WK + Zub Ceramic
Brake Disc								
1.4 16V 1.6 1.6 16V 1.6 HDi 110	65 81 80 80	10/03→ 05/05→07/08 07/02→ 05/04→		→ 05/07		**24.0122-0194.1**	**422194**	Ø 266 Brake Disc Thickness [mm] 22 Minimum thickness [mm] 20 Vented + S
1.6 Flex 1.6 LPG 2.0 16V 2.0 HDi	81 - 83 80 100 66	05/05→07/08 07/02→02/07 07/02→02/07 07/02→02/07				**24.0122-0194.1**	**422194**	Ø 266 Brake Disc Thickness [mm] 22 Minimum thickness [mm] 20 Vented + S
PEUGEOT - 207 (WA_, WC_) 02/06→12/15								
Guide Bolt, brake caliper								
1.6 16V RC	128	02/07→12/12		→ 06/12	2	**11.8171-0008.1**	**990049**	ATE
Brake Pad Set, disc brake								
1.4	53 - 55	02/06→12/15		→ 06/12		**13.0460-3994.2**	**603994**	BOS 23599 19,0 - WE / - WK + Zub

	kW				! #			
PEUGEOT - 207 (WA_, WC_) 02/06→12/15								
Brake Pad Set, disc brake								
1.4 16V 1.4 Bioflex 1.4 HDi 1.6 HDi	65 60 50 - 52 68	02/06→10/13 08/08→12/14 02/06→12/15 11/09→12/12	←	→ 06/12		**13.0470-3994.2**	**LD3994**	BOS 23599 19,0 - WE / - WK + Zub Ceramic
1.4 BiFuel 2.0 HDi	54 66	08/07→12/13 10/08→12/12	←			**13.0460-3994.2** **13.0470-3994.2**	**603994** **LD3994**	BOS 23599 19,0 - WE / - WK + Zub BOS 23599 19,0 - WE / - WK + Zub Ceramic
1.6 HDi	66	02/06→10/13	←	for brake disc diameter [mm]: 266; → 06/12		**13.0460-3994.2** **13.0470-3994.2**	**603994** **LD3994**	BOS 23599 19,0 - WE / - WK + Zub BOS 23599 19,0 - WE / - WK + Zub Ceramic
Brake Disc								
1.4 1.4 16V 1.4 Bioflex 1.4 HDi 1.6 HDi	53 - 55 65 60 50 - 52 66 - 68	02/06→12/15 02/06→10/13 08/08→12/14 02/06→12/15 02/06→10/13	←	→ 06/12		**24.0122-0194.1**	**422194**	Ø 266 Brake Disc Thickness [mm] 22 Minimum thickness [mm] 20 Vented + S
1.4 BiFuel 2.0 HDi	54 66	08/07→12/13 10/08→12/12	←			**24.0122-0194.1**	**422194**	Ø 266 Brake Disc Thickness [mm] 22 Minimum thickness [mm] 20 Vented + S
Accessory Kit, brake shoes								
1.4 1.4 16V 1.4 Bioflex 1.4 HDi 1.6 HDi	53 - 55 65 - 72 60 50 - 52 66 - 68	02/06→12/15 02/06→10/13 08/08→12/14 02/06→12/15 02/06→10/13	→	→ 06/12		**03.0137-9228.2**	**669228**	BDX
1.4 16V	70	06/07→10/13	→	08/07→ 06/12		**03.0137-9228.2**	**669228**	BDX
1.4 BiFuel	54	08/07→12/13	→			**03.0137-9228.2**	**669228**	BDX
PEUGEOT - 207 Hatchback Van (WA_, WC_) 04/06→								
Brake Pad Set, disc brake								
1.4	54	06/07→10/08	←			**13.0460-3994.2** **13.0470-3994.2**	**603994** **LD3994**	BOS 23599 19,0 - WE / - WK + Zub BOS 23599 19,0 - WE / - WK + Zub Ceramic
1.4 HDi	50	04/07→	←	→ 06/12		**13.0460-3994.2** **13.0470-3994.2**	**603994** **LD3994**	BOS 23599 19,0 - WE / - WK + Zub BOS 23599 19,0 - WE / - WK + Zub Ceramic
1.6 HDi	66 - 68	04/07→03/13	←	for brake disc diameter [mm]: 266; → 06/12		**13.0460-3994.2** **13.0470-3994.2**	**603994** **LD3994**	BOS 23599 19,0 - WE / - WK + Zub BOS 23599 19,0 - WE / - WK + Zub Ceramic
Brake Disc								
1.4	54	06/07→10/08	←			**24.0122-0194.1**	**422194**	Ø 266 Brake Disc Thickness [mm] 22 Minimum thickness [mm] 20 Vented + S
1.4 HDi 1.6 HDi	50 66 - 68	04/07→ 04/07→03/13	←	→ 06/12		**24.0122-0194.1**	**422194**	Ø 266 Brake Disc Thickness [mm] 22 Minimum thickness [mm] 20 Vented + S
Accessory Kit, brake shoes								
1.4	54	06/07→10/08	→			**03.0137-9228.2**	**669228**	BDX
1.4 HDi 1.6 HDi	50 66 - 68	04/07→ 04/07→03/13	→	→ 06/12		**03.0137-9228.2**	**669228**	BDX

© 2022 Continental Aftermarket & Services GmbH

	kW				! #			
PEUGEOT - 207 Saloon 12/07→12/14								
Brake Pad Set, disc brake								
1.4 1.4 Flex	54 - 55 60	12/07→12/12 11/08→12/14	←	→ 06/12		**13.0460-3994.2** **13.0470-3994.2**	**603994** **LD3994**	BOS 23599 19,0 - WE / - WK + Zub BOS 23599 19,0 - WE / - WK + Zub Ceramic
2.0 HDi	66	12/07→12/12	←			**13.0460-3994.2** **13.0470-3994.2**	**603994** **LD3994**	BOS 23599 19,0 - WE / - WK + Zub BOS 23599 19,0 - WE / - WK + Zub Ceramic
Brake Disc								
1.4 1.4 Flex	54 - 55 60	12/07→12/12 11/08→12/14	←	→ 06/12		**24.0122-0194.1**	**422194**	Ø 266 Brake Disc Thickness [mm] 22 Minimum thickness [mm] 20 Vented + S
2.0 HDi	66	12/07→12/12	←			**24.0122-0194.1**	**422194**	Ø 266 Brake Disc Thickness [mm] 22 Minimum thickness [mm] 20 Vented + S
Accessory Kit, brake shoes								
1.4 1.4 Flex	54 - 55 60	12/07→12/12 11/08→12/14	→	→ 06/12		**03.0137-9228.2**	**669228**	BDX
PEUGEOT - 207 SW (WK_) 02/07→12/13								
Guide Bolt, brake caliper								
1.6 16V RC	128	02/07→12/12		11/07→	2	**11.8171-0008.1**	**990049**	ATE
Brake Pad Set, disc brake								
1.4 1.4 Flex 1.4 LPG 2.0 HDi	54 59 54 66	06/07→12/12 08/08→01/13 08/07→12/12 10/08→12/12	←			**13.0460-3994.2** **13.0470-3994.2**	**603994** **LD3994**	BOS 23599 19,0 - WE / - WK + Zub BOS 23599 19,0 - WE / - WK + Zub Ceramic
1.6 HDi	66	06/07→12/12	←	for brake disc diameter [mm]: 266		**13.0460-3994.2** **13.0470-3994.2**	**603994** **LD3994**	BOS 23599 19,0 - WE / - WK + Zub BOS 23599 19,0 - WE / - WK + Zub Ceramic
Brake Disc								
1.4 1.4 Flex 1.4 LPG 1.6 HDi 2.0 HDi	54 59 54 66 66	06/07→12/12 08/08→01/13 08/07→12/12 06/07→12/12 10/08→12/12	←			**24.0122-0194.1**	**422194**	Ø 266 Brake Disc Thickness [mm] 22 Minimum thickness [mm] 20 Vented + S
Accessory Kit, brake shoes								
1.4 1.4 16V 1.4 Flex 1.4 LPG 1.6 HDi	54 72 59 54 66 - 68	06/07→12/12 11/09→12/12 08/08→01/13 08/07→12/12 06/07→12/12	→			**03.0137-9228.2**	**669228**	BDX
1.4 16V	70	06/07→10/13	→	→ 07/13		**03.0137-9228.2**	**669228**	BDX
PEUGEOT - 207 SW Estate Van (WK_) 08/07→12/12								
Accessory Kit, brake shoes								
1.6 HDi	66	08/07→12/12	→			**03.0137-9228.2**	**669228**	BDX
PEUGEOT - 208 I (CA_, CC_) 03/12→								
Spring, brake caliper								
1.0 1.2 GPL 1.2 THP 110 1.2 VTI 82 1.4 GPL 1.4 HDi 1.4 VTi 1.6 1.6 BlueHDi 100 1.6 BlueHDi 120 1.6 e-HDi 1.6 HDi	50 60 81 60 70 50 70 85 - 115 73 88 82 68 - 85	03/12→ 06/15→ 01/13→ 03/12→ 10/13→ 03/12→ 03/12→ 03/12→ 01/15→ 11/13→ 07/15→ 03/12→	←	for brake disc diameter [mm]: 302	2	**11.8116-0356.1**	**390586**	ATE

	kW				! #			
PEUGEOT - 208 I (CA_, CC_) 03/12→								
Spring, brake caliper								
1.6 HDi / BlueHDi 75 1.6 THP 165	55 121	01/13→ 03/15→	←	for brake disc diameter [mm]: 302	2	**11.8116-0356.1**	**390586**	ATE
1.6 GTi	147	08/12→	←	03/13→; for brake disc diameter [mm]: 302	2	**11.8116-0356.1**	**390586**	ATE
1.6 GTi	153	10/14→	←	Orga 14084→; for brake disc diameter [mm]: 302	2	**11.8116-0356.1**	**390586**	ATE
Guide Bolt, brake caliper								
1.0 1.2 GPL 1.2 THP 110 1.2 VTI 82 1.4 GPL 1.4 HDi 1.4 VTi 1.6 1.6 BlueHDi 100 1.6 BlueHDi 120 1.6 e-HDi 1.6 HDi 1.6 HDi / BlueHDi 75 1.6 THP 165	50 60 81 60 70 50 70 85 - 115 73 88 82 68 - 85 55 121	03/12→ 06/15→ 01/13→ 03/12→ 10/13→ 03/12→ 03/12→ 03/12→ 01/15→ 11/13→ 07/15→ 03/12→ 01/13→ 03/15→	←	for brake disc diameter [mm]: 302	2	**11.8171-0008.1**	**990049**	ATE
1.6 GTi	147	08/12→	←	03/13→; for brake disc diameter [mm]: 302	2	**11.8171-0008.1**	**990049**	ATE
1.6 GTi	153	10/14→	←	Orga 14084→; for brake disc diameter [mm]: 302	2	**11.8171-0008.1**	**990049**	ATE
Brake Pad Set, disc brake								
1.0 1.2 GPL 1.2 PureTech 82 1.2 THP 110 1.2 VTi 68 / PureTech 68 1.2 VTI 82 1.4 GPL 1.4 HDi 1.4 VTi 1.5 BlueHDI 100 1.6 1.6 BlueHDi 100 1.6 BlueHDi 120 1.6 e-HDi 1.6 HDi 1.6 HDi / BlueHDi 75 1.6 THP 165	50 60 61 81 50 60 70 50 70 75 85 - 115 73 88 82 68 - 85 55 121	03/12→ 06/15→ 03/18→ 01/13→ 08/16→ 03/12→ 10/13→ 03/12→ 03/12→ 05/18→ 03/12→ 01/15→ 11/13→ 07/15→ 03/12→ 01/13→ 03/15→	←	for brake disc diameter [mm]: 266		**13.0460-3994.2** **13.0470-3994.2**	**603994** **LD3994**	BOS 23599 19,0 - WE / - WK + Zub BOS 23599 19,0 - WE / - WK + Zub Ceramic
Brake Disc								
1.0 1.2 GPL 1.2 PureTech 82 1.2 THP 110 1.2 VTi 68 / PureTech 68 1.2 VTI 82 1.4 GPL 1.4 HDi 1.4 VTi 1.5 BlueHDI 100 1.6 1.6 BlueHDi 100 1.6 BlueHDi 120 1.6 e-HDi 1.6 HDi 1.6 HDi / BlueHDi 75 1.6 THP 165	50 60 61 81 50 60 70 50 70 75 85 - 115 73 88 82 68 - 85 55 121	03/12→ 06/15→ 03/18→ 01/13→ 08/16→ 03/12→ 10/13→ 03/12→ 03/12→ 05/18→ 03/12→ 01/15→ 11/13→ 07/15→ 03/12→ 01/13→ 03/15→	←			**24.0122-0194.1**	**422194**	Ø 266 Brake Disc Thickness [mm] 22 Minimum thickness [mm] 20 Vented + S
Wheel Brake Cylinder								
1.0 1.2 GPL 1.2 PureTech 82 1.2 THP 110 1.2 VTi 68 / PureTech 68 1.2 VTI 82 1.4 GPL 1.4 HDi 1.4 VTi 1.5 BlueHDI 100	50 60 61 81 50 60 70 50 70 75	03/12→ 06/15→ 03/18→ 01/13→ 08/16→ 03/12→ 10/13→ 03/12→ 03/12→ 05/18→	→	Inner Br. Drum Diam. [in]: 8	2	**24.3220-1743.3**	**020556**	ALU

© 2022 Continental Aftermarket & Services GmbH

	kW				! #			
PEUGEOT - 208 I (CA_, CC_) 03/12→								
Wheel Brake Cylinder								
1.6	85 - 115	03/12→		Inner Br. Drum Diam. [in]: 8	2	**24.3220-1743.3**	**020556**	ALU
1.6 BlueHDi 100	73	01/15→						
1.6 BlueHDi 120	88	11/13→						
1.6 e-HDi	82	07/15→						
1.6 HDi	68 - 85	03/12→						
1.6 HDi / BlueHDi 75	55	01/13→						
1.6 THP 165	121	03/15→						
Accessory Kit, brake shoes								
1.0	50	03/12→		Inner Br. Drum Diam. [in]: 9		**03.0137-9228.2**	**669228**	BDX
1.2 GPL	60	06/15→						
1.2 PureTech 82	61	03/18→						
1.2 THP 110	81	01/13→						
1.2 VTi 68 / PureTech 68	50	08/16→						
1.2 VTI 82	60	03/12→						
1.4 GPL	70	10/13→						
1.4 HDi	50	03/12→						
1.4 VTi	70	03/12→						
1.5 BlueHDI 100	75	05/18→						
1.6	85 - 115	03/12→						
1.6 BlueHDi 100	73	01/15→						
1.6 BlueHDi 120	88	11/13→						
1.6 e-HDi	82	07/15→						
1.6 HDi	68 - 85	03/12→						
1.6 HDi / BlueHDi 75	55	01/13→						
1.6 THP 165	121	03/15→						
PEUGEOT - 208 II (UB_, UP_, UW_, UJ_) 06/19→								
Spring, brake caliper								
1.2 PureTech 100	74	06/19→		for brake disc diameter [mm]: 302; → for DAM number up to: 1624676	2	**11.8116-0356.1**	**390586**	ATE
1.2 PureTech 130	96	06/19→						
1.2 PureTech 75	55	06/19→						
1.2 VTi 82	60	06/19→						
1.5 BlueHDI 100	75	06/19→						
1.5 BlueHDI 130	96	09/19→						
1.6 HDI 90	68	10/19→						
1.6 VTi 115	85	11/19→						
e-208	100	06/19→						
Brake Pad Set, disc brake								
1.2 PureTech 100	74	06/19→		for brake disc diameter [mm]: 266		**13.0460-3994.2**	**603994**	BOS 23599 19,0 - WE / - WK + Zub
1.2 PureTech 130	96	06/19→						
1.2 PureTech 75	55	06/19→				**13.0470-3994.2**	**LD3994**	BOS 23599 19,0 - WE / - WK + Zub Ceramic
1.2 VTi 82	60	06/19→						
1.5 BlueHDI 100	75	06/19→						
1.5 BlueHDI 130	96	09/19→						
1.6 HDI 90	68	10/19→						
1.6 VTi 115	85	11/19→						
e-208	100	06/19→		for brake disc diameter [mm]: 266		**13.0460-3994.2**	**603994**	BOS 23599 19,0 - WE / - WK + Zub
						13.0470-3994.2	**LD3994**	BOS 23599 19,0 - WE / - WK + Zub Ceramic
						13.0460-3871.2	**603871**	BOS 25839 17,8 - WE / - WK + Zub
						13.0470-3871.2	**LD3871**	BOS 25839 17,8 - WE / - WK + Zub Ceramic
Brake Disc								
1.2 PureTech 100	74	06/19→				**24.0122-0194.1**	**422194**	Ø 266 Brake Disc Thickness [mm] 22 Minimum thickness [mm] 20 Vented + S
1.2 PureTech 130	96	06/19→						
1.2 PureTech 75	55	06/19→						
1.2 VTi 82	60	06/19→						
1.5 BlueHDI 100	75	06/19→						
1.5 BlueHDI 130	96	09/19→						
1.6 HDI 90	68	10/19→						
1.6 VTi 115	85	11/19→						
e-208	100	06/19→						
Wheel Brake Cylinder								
1.2 PureTech 100	74	06/19→			2	**24.3220-1743.3**	**020556**	ALU
1.2 PureTech 130	96	06/19→						
1.2 PureTech 75	55	06/19→						
1.2 VTi 82	60	06/19→						
1.5 BlueHDI 100	75	06/19→						
1.5 BlueHDI 130	96	09/19→						
1.6 HDI 90	68	10/19→						

	kW				! #			
PEUGEOT - 208 II (UB_, UP_, UW_, UJ_) 06/19→								
Wheel Brake Cylinder								
1.6 VTi 115	85	11/19→	➡		2	**24.3220-1743.3**	**020556**	ALU
PEUGEOT - 208 Hatchback Van (CR_) 10/12→								
Spring, brake caliper								
1.2 VTI 82 / PureTech 82 1.4 HDi 68 1.6 Blue HDi 100 1.6 BlueHDi 75 1.6 HDi 92	60 50 73 55 68	06/15→ 10/12→ 06/15→ 04/15→ 03/14→	⬅	for brake disc diameter [mm]: 302	2	**11.8116-0356.1**	**390586**	ATE
Guide Bolt, brake caliper								
1.2 VTI 82 / PureTech 82 1.4 HDi 68 1.6 Blue HDi 100 1.6 BlueHDi 75 1.6 HDi 92	60 50 73 55 68	06/15→ 10/12→ 06/15→ 04/15→ 03/14→	⬅	for brake disc diameter [mm]: 302	2	**11.8171-0008.1**	**990049**	ATE
Brake Pad Set, disc brake								
1.2 VTI 68 / PureTech 68 1.2 VTI 82 / PureTech 82 1.4 HDi 68 1.5 BlueHDi 100 1.6 Blue HDi 100 1.6 BlueHDi 75 1.6 HDi 92	50 60 50 75 73 55 68	06/15→ 06/15→ 10/12→ 05/18→ 06/15→ 04/15→ 03/14→	⬅	for brake disc diameter [mm]: 266		**13.0460-3994.2** **13.0470-3994.2**	**603994** **LD3994**	BOS 23599 19,0 - WE / - WK + Zub BOS 23599 19,0 - WE / - WK + Zub Ceramic
Brake Disc								
1.2 VTI 68 / PureTech 68 1.2 VTI 82 / PureTech 82 1.4 HDi 68 1.5 BlueHDi 100 1.6 Blue HDi 100 1.6 BlueHDi 75 1.6 HDi 92	50 60 50 75 73 55 68	06/15→ 06/15→ 10/12→ 05/18→ 06/15→ 04/15→ 03/14→	⬅			**24.0122-0194.1**	**422194**	Ø 266 Brake Disc Thickness [mm] 22 Minimum thickness [mm] 20 Vented + S
Wheel Brake Cylinder								
1.2 VTI 68 / PureTech 68 1.5 BlueHDi 100	50 75	06/15→ 05/18→	➡	Inner Br. Drum Diam. [in]: 8	2	**24.3220-1743.3**	**020556**	ALU
1.2 VTI 82 / PureTech 82 1.4 HDi 68 1.6 Blue HDi 100 1.6 BlueHDi 75 1.6 HDi 92	60 50 73 55 68	06/15→ 10/12→ 06/15→ 04/15→ 03/14→	➡	Inner Br. Drum Diam. [in]: 8		**24.3220-1743.3**	**020556**	ALU
Accessory Kit, brake shoes								
1.2 VTI 68 / PureTech 68 1.2 VTI 82 / PureTech 82 1.4 HDi 68 1.5 BlueHDi 100 1.6 Blue HDi 100 1.6 BlueHDi 75 1.6 HDi 92	50 60 50 75 73 55 68	06/15→ 06/15→ 10/12→ 05/18→ 06/15→ 04/15→ 03/14→	➡	Inner Br. Drum Diam. [in]: 9		**03.0137-9228.2**	**669228**	BDX
PEUGEOT - 301 11/12→								
Brake Pad Set, disc brake								
1.2 PureTech 82 1.2 VTi 72 1.2 VTi 82 1.5 BlueHDI 100 1.6 BlueHDi 100 1.6 HDI 90 1.6 LPG 1.6 VTi 115	61 53 60 75 73 68 85 85	02/18→ 11/12→ 12/14→ 05/18→ 04/14→ 11/12→ 07/14→ 11/12→10/17	⬅	Vented		**13.0460-3994.2** **13.0470-3994.2**	**603994** **LD3994**	BOS 23599 19,0 - WE / - WK + Zub BOS 23599 19,0 - WE / - WK + Zub Ceramic
Brake Disc								
1.2 PureTech 82 1.2 VTi 72 1.2 VTi 82 1.5 BlueHDI 100 1.6 BlueHDi 100 1.6 HDI 90 1.6 LPG 1.6 VTi 115	61 53 60 75 73 68 85 85	02/18→ 11/12→ 12/14→ 05/18→ 04/14→ 11/12→ 07/14→ 11/12→10/17	⬅			**24.0122-0194.1**	**422194**	Ø 266 Brake Disc Thickness [mm] 22 Minimum thickness [mm] 20 Vented + S
Wheel Brake Cylinder								
1.2 PureTech 82 1.5 BlueHDI 100	61 75	02/18→ 05/18→	➡	Inner Br. Drum Diam. [in]: 8	2	**24.3220-1743.3**	**020556**	ALU

© 2022 Continental Aftermarket & Services GmbH

	kW				! #			
PEUGEOT - 301 11/12→								
Wheel Brake Cylinder								
1.2 VTi 72 1.2 VTi 82 1.6 BlueHDi 100 1.6 HDI 90 1.6 LPG 1.6 VTi 115	53 60 73 68 85 85	11/12→ 12/14→ 04/14→ 11/12→ 07/14→ 11/12→10/17	➡	Orga 14693→; Inner Br. Drum Diam. [in]: 8	2	**24.3220-1743.3**	**020556**	ALU
			➡	→Orga 14692; + ABS	2	**24.3220-1743.3**	**020556**	ALU
Accessory Kit, brake shoes								
1.2 PureTech 82 1.2 VTi 72 1.2 VTi 82 1.5 BlueHDI 100 1.6 BlueHDi 100 1.6 HDI 90 1.6 LPG 1.6 VTi 115	61 53 60 75 73 68 85 85	02/18→ 11/12→ 12/14→ 05/18→ 04/14→ 11/12→ 07/14→ 11/12→10/17	➡	Inner Br. Drum Diam. [in]: 9		**03.0137-9228.2**	**669228**	BDX
PEUGEOT - 306 (7B, N3, N5) 04/93→10/03								
Guide Bolt, brake caliper								
1.1	44	06/94→05/01		→ 04/97; + ABS	2	**11.8171-0008.1**	**990049**	ATE
1.4 SL	55	06/94→05/01		10/94→; →Orga 08575; + ABS	2	**11.8171-0008.1**	**990049**	ATE
1.6	66	07/00→05/01		→Orga 08575	2	**11.8171-0008.1**	**990049**	ATE
1.8 1.8 ST 1.9 D	74 74 51	06/94→05/01 06/94→05/01 09/98→05/01		Orga 08576→; - ABS	2	**11.8171-0008.1**	**990049**	ATE
1.6	72	10/00→05/01		- ABS	2	**11.8171-0008.1**	**990049**	ATE
1.6 SR	65	06/94→10/00		10/94→; →Orga 08575	2	**11.8171-0008.1**	**990049**	ATE
				Orga 08576→; - ABS	2	**11.8171-0008.1**	**990049**	ATE
1.9 D	68	02/94→12/97		10/94→	2	**11.8171-0008.1**	**990049**	ATE
					2	**11.8171-0008.1**	**990049**	ATE
1.9 SLD 1.9 SRDT	47 - 50 66	06/94→05/01 06/94→05/01		10/94→	2	**11.8171-0008.1**	**990049**	ATE
1.9 STD	51	02/94→10/95		Orga 08576→; - ABS	2	**11.8171-0008.1**	**990049**	ATE
Accessory Kit, brake shoes								
1.1	44	06/94→05/01	➡	→ 04/97; + ABS		**03.0137-9228.2**	**669228**	BDX
1.4 SL 1.6 SR 1.9 SLD 1.9 SRDT	55 65 50 66	06/94→05/01 06/94→10/00 06/94→05/01 06/94→05/01	➡	10/94→; + ABS		**03.0137-9228.2**	**669228**	BDX
1.8 1.8 ST 1.9 D 1.9 SLD 1.9 STD	74 74 51 - 55 47 51	06/94→05/01 06/94→05/01 03/98→05/01 06/94→05/01 02/94→10/95	➡	+ ABS		**03.0137-9228.2**	**669228**	BDX
1.9 D	68	02/94→12/97	➡	+ ABS; for vehicles without heavy duty suspen-sion		**03.0137-9228.2**	**669228**	BDX
			➡	- ABS; for vehicles with heavy duty suspension; Number of Doors: 3		**03.0137-9228.2**	**669228**	BDX
			➡	10/94→; + ABS		**03.0137-9228.2**	**669228**	BDX
PEUGEOT - 306 Break (7E, N3, N5) 06/94→12/02								
Guide Bolt, brake caliper								
1.4 1.6 1.9 D	55 72 50 - 55	03/97→04/02 10/00→04/02 03/97→04/02		→ 03/02; - ABS	2	**11.8171-0008.1**	**990049**	ATE
1.6 1.8 D 1.9 D	65 44 51	03/97→10/00 05/97→06/00 05/97→05/99		- ABS	2	**11.8171-0008.1**	**990049**	ATE
Accessory Kit, brake shoes								
1.4 1.6 1.8 1.9 D	55 72 74 50 - 55	03/97→04/02 10/00→04/02 03/97→04/02 03/97→04/02	➡	→ 03/02		**03.0137-9228.2**	**669228**	BDX
1.6 1.8 D 1.9 D	65 44 51	03/97→10/00 05/97→06/00 05/97→05/99	➡			**03.0137-9228.2**	**669228**	BDX
1.9 Td	52	07/95→08/00	➡	03/97→		**03.0137-9228.2**	**669228**	BDX

	kW				! #			
PEUGEOT - 306 Break (7E, N3, N5) 06/94→12/02								
Accessory Kit, brake shoes								
1.9 TD	66	02/97→04/02	➡	03/97→ 03/02		**03.0137-9228.2**	**669228**	BDX
PEUGEOT - 306 Convertible (7D, N3, N5) 01/94→04/02								
Guide Bolt, brake caliper								
1.6	65	04/96→10/00		→Orga 08575	2	**11.8171-0008.1**	**990049**	ATE
				05/00→; - ABS	2	**11.8171-0008.1**	**990049**	ATE
1.8	74	03/94→04/02		→Orga 08575	2	**11.8171-0008.1**	**990049**	ATE
				05/00→ 10/00; - ABS	2	**11.8171-0008.1**	**990049**	ATE
1.8	74	05/97→04/99		→Orga 08575	2	**11.8171-0008.1**	**990049**	ATE
Accessory Kit, brake shoes								
1.6	65	04/96→10/00	➡	→ 05/00; + ABS		**03.0137-9228.2**	**669228**	BDX
1.8	74	03/94→04/02	➡	→ 10/00; + ABS		**03.0137-9228.2**	**669228**	BDX
1.8	74	05/97→04/99	➡	+ ABS		**03.0137-9228.2**	**669228**	BDX
PEUGEOT - 306 Estate Van (N_, 7_) 07/93→08/02								
Guide Bolt, brake caliper								
1.4	55	03/96→07/01		→Orga 08575; + ABS	2	**11.8171-0008.1**	**990049**	ATE
1.8 D 1.9 D	44 50	05/97→06/00 05/97→05/99		- ABS	2	**11.8171-0008.1**	**990049**	ATE
1.9 D	51	02/99→08/02		→ 03/02; - ABS	2	**11.8171-0008.1**	**990049**	ATE
1.9 D	68	02/94→04/99			2	**11.8171-0008.1**	**990049**	ATE
1.9 STD	51	02/94→05/99		09/98→; →Orga 08575	2	**11.8171-0008.1**	**990049**	ATE
				Orga 08576→; - ABS	2	**11.8171-0008.1**	**990049**	ATE
Accessory Kit, brake shoes								
1.4	55	03/96→07/01	➡	→ 04/97; + ABS; for vehicles without heavy duty suspen-sion		**03.0137-9228.2**	**669228**	BDX
			➡	→ 04/97; - ABS; for vehicles with heavy duty suspension; Number of Doors: 3		**03.0137-9228.2**	**669228**	BDX
1.8 D 1.9 D	44 50	05/97→06/00 05/97→05/99	➡			**03.0137-9228.2**	**669228**	BDX
1.9 D	51	02/99→08/02	➡	→ 03/02		**03.0137-9228.2**	**669228**	BDX
1.9 D	68	02/94→04/99	➡	+ ABS; for vehicles without heavy duty suspen-sion		**03.0137-9228.2**	**669228**	BDX
			➡	- ABS; for vehicles with heavy duty suspension; Number of Doors: 3		**03.0137-9228.2**	**669228**	BDX
PEUGEOT - 306 Hatchback (7A, 7C, N3, N5) 01/93→10/03								
Guide Bolt, brake caliper								
1.1	44	05/93→05/01		03/94→ 04/97; + ABS	2	**11.8171-0008.1**	**990049**	ATE
1.4	55	04/93→07/01		→Orga 08575; + ABS	2	**11.8171-0008.1**	**990049**	ATE
					2	**11.8171-0008.1**	**990049**	ATE
1.6	65 - 66	05/93→05/01		→Orga 08575	2	**11.8171-0008.1**	**990049**	ATE
1.8	74	05/93→05/01		Orga 08576→; - ABS	2	**11.8171-0008.1**	**990049**	ATE
1.6	72	10/00→05/01		- ABS	2	**11.8171-0008.1**	**990049**	ATE
1.8 D 1.9 Td	43 - 44 52	04/93→05/01 07/95→08/00			2	**11.8171-0008.1**	**990049**	ATE
1.9 D	47 - 55	05/93→05/01			2	**11.8171-0008.1**	**990049**	ATE
				09/98→; + ABS; → 10/00	2	**11.8171-0008.1**	**990049**	ATE
1.9 D	51	04/93→05/99		09/98→; →Orga 08575	2	**11.8171-0008.1**	**990049**	ATE
				Orga 08576→; - ABS	2	**11.8171-0008.1**	**990049**	ATE
1.9 D	51	09/98→05/01		→Orga 08575	2	**11.8171-0008.1**	**990049**	ATE
				+ ABS; → 10/00	2	**11.8171-0008.1**	**990049**	ATE
				Orga 08576→; - ABS	2	**11.8171-0008.1**	**990049**	ATE
1.9 D	52	01/99→08/03		→Orga 08575	2	**11.8171-0008.1**	**990049**	ATE
				Orga 08576→; → 05/01; - ABS	2	**11.8171-0008.1**	**990049**	ATE
1.9 D	68	01/93→12/97		10/93→	2	**11.8171-0008.1**	**990049**	ATE
				10/94→	2	**11.8171-0008.1**	**990049**	ATE
1.9 DT	66	05/93→05/01		10/93→	2	**11.8171-0008.1**	**990049**	ATE

© 2022 Continental Aftermarket & Services GmbH

	kW				! #			
PEUGEOT - 306 Hatchback (7A, 7C, N3, N5) 01/93→10/03								
Accessory Kit, brake shoes								
1.1	44	05/93→05/01	➡	03/94→ 04/97; + ABS		**03.0137-9228.2**	**669228**	BDX
1.4 1.8 D 1.9 D	55 43 47 - 50	04/93→07/01 05/93→05/01 05/93→05/01	➡	→ 04/97; + ABS; for vehicles without heavy duty suspen-sion		**03.0137-9228.2**	**669228**	BDX
			➡	→ 04/97; - ABS; for vehicles with heavy duty suspension; Number of Doors: 3		**03.0137-9228.2**	**669228**	BDX
			➡	05/97→		**03.0137-9228.2**	**669228**	BDX
1.8 D	44	04/93→05/99	➡	→ 04/97; + ABS; for vehicles without heavy duty suspen-sion		**03.0137-9228.2**	**669228**	BDX
			➡	→ 04/97; - ABS; for vehicles with heavy duty suspension; Number of Doors: 3		**03.0137-9228.2**	**669228**	BDX
1.9 D	51 - 55	03/98→05/01	➡			**03.0137-9228.2**	**669228**	BDX
1.9 D	68	01/93→12/97	➡	10/93→; + ABS; for vehicles without heavy duty suspen-sion		**03.0137-9228.2**	**669228**	BDX
			➡	10/93→; - ABS; for vehicles with heavy duty suspension; Number of Doors: 3		**03.0137-9228.2**	**669228**	BDX
			➡	10/94→; + ABS		**03.0137-9228.2**	**669228**	BDX
1.9 DT	66	05/93→05/01	➡	10/93→; + ABS; for vehicles without heavy duty suspen-sion		**03.0137-9228.2**	**669228**	BDX
			➡	10/93→; - ABS; for vehicles with heavy duty suspension; Number of Doors: 3		**03.0137-9228.2**	**669228**	BDX
1.9 Td	52	07/95→08/00	➡	+ ABS; for vehicles without heavy duty suspen-sion		**03.0137-9228.2**	**669228**	BDX
			➡	- ABS; for vehicles with heavy duty suspension; Number of Doors: 3		**03.0137-9228.2**	**669228**	BDX
PEUGEOT - 306 Hatchback Van 04/93→08/01								
Guide Bolt, brake caliper								
1.1	44	07/93→12/94		03/94→; + ABS	2	**11.8171-0008.1**	**990049**	ATE
1.4	55	03/96→07/01		→Orga 08575; + ABS	2	**11.8171-0008.1**	**990049**	ATE
1.8 D 1.9 D	44 50	04/93→05/99 05/97→05/99			2	**11.8171-0008.1**	**990049**	ATE
1.9 D	51	02/99→08/01		→Orga 08575	2	**11.8171-0008.1**	**990049**	ATE
				Orga 08576→; → 05/01; - ABS	2	**11.8171-0008.1**	**990049**	ATE
1.9 STD	51	02/94→10/95		06/94→	2	**11.8171-0008.1**	**990049**	ATE
Accessory Kit, brake shoes								
1.1	44	07/93→12/94	➡	03/94→; + ABS		**03.0137-9228.2**	**669228**	BDX
1.4 1.8 D	55 44	03/96→07/01 04/93→05/99	➡	→ 04/97; + ABS; for vehicles without heavy duty suspen-sion		**03.0137-9228.2**	**669228**	BDX
			➡	→ 04/97; - ABS; for vehicles with heavy duty suspension; Number of Doors: 3		**03.0137-9228.2**	**669228**	BDX
1.9 D 1.9 STD	50 - 51 51	05/97→08/01 02/94→10/95	➡	+ ABS		**03.0137-9228.2**	**669228**	BDX
PEUGEOT - 307 (3A/C) 08/00→12/12								
Guide Bolt, brake caliper								
2.0 16V 2.0 HDi 135	130 100	06/05→11/07 10/03→11/07		Orga 10488→; → 07/07	2	**11.8171-0008.1**	**990049**	ATE
				→Orga 10487	2	**11.8171-0008.1**	**990049**	ATE
Brake Pad Set, disc brake								
1.4 1.4 HDi	55 50	08/00→09/03 10/01→06/05	⬅			**13.0460-3994.2** **13.0470-3994.2**	**603994** **LD3994**	BOS 23599 19,0 - WE / - WK + Zub BOS 23599 19,0 - WE / - WK + Zub Ceramic
1.4 16V	65	11/03→07/07	⬅	- ESP		**13.0460-3994.2** **13.0470-3994.2**	**603994** **LD3994**	BOS 23599 19,0 - WE / - WK + Zub BOS 23599 19,0 - WE / - WK + Zub Ceramic

	kW				! #			
PEUGEOT - 307 (3A/C) 08/00→12/12								
Brake Pad Set, disc brake								
1.4 16V	65	11/03→07/07		Orga 10551→; + ESP		**13.0460-3994.2**	**603994**	BOS 23599 19,0 - WE / - WK + Zub
						13.0470-3994.2	**LD3994**	BOS 23599 19,0 - WE / - WK + Zub Ceramic
1.6	81	07/06→04/12		→ 07/07; + ESP; Manual Transmission		**13.0460-3994.2**	**603994**	BOS 23599 19,0 - WE / - WK + Zub
						13.0470-3994.2	**LD3994**	BOS 23599 19,0 - WE / - WK + Zub Ceramic
1.6 16V	80	08/00→11/07		→ 07/07; Manual Transmission; - ESP		**13.0460-3994.2**	**603994**	BOS 23599 19,0 - WE / - WK + Zub
						13.0470-3994.2	**LD3994**	BOS 23599 19,0 - WE / - WK + Zub Ceramic
				Orga 10551→; → 07/07; + ESP; Manual Transmission		**13.0460-3994.2**	**603994**	BOS 23599 19,0 - WE / - WK + Zub
						13.0470-3994.2	**LD3994**	BOS 23599 19,0 - WE / - WK + Zub Ceramic
1.6 Flex	83	07/06→12/12		+ ESP; Manual Transmission		**13.0460-3994.2**	**603994**	BOS 23599 19,0 - WE / - WK + Zub
						13.0470-3994.2	**LD3994**	BOS 23599 19,0 - WE / - WK + Zub Ceramic
1.6 HDi	66	04/05→03/09		→ 07/07; - ESP		**13.0460-3994.2**	**603994**	BOS 23599 19,0 - WE / - WK + Zub
						13.0470-3994.2	**LD3994**	BOS 23599 19,0 - WE / - WK + Zub Ceramic
				Orga 10551→; → 07/07; + ESP		**13.0460-3994.2**	**603994**	BOS 23599 19,0 - WE / - WK + Zub
						13.0470-3994.2	**LD3994**	BOS 23599 19,0 - WE / - WK + Zub Ceramic
2.0 HDi 90	66	08/00→03/07		Orga 09520→; - ESP		**13.0460-3994.2**	**603994**	BOS 23599 19,0 - WE / - WK + Zub
						13.0470-3994.2	**LD3994**	BOS 23599 19,0 - WE / - WK + Zub Ceramic
Brake Disc								
1.4 1.4 HDi	55 50	08/00→09/03 10/01→06/05				**24.0122-0194.1**	**422194**	Ø 266 Brake Disc Thickness [mm] 22 Minimum thickness [mm] 20 Vented + S
1.4 16V	65	11/03→07/07		- ESP		**24.0122-0194.1**	**422194**	Ø 266 Brake Disc Thickness [mm] 22 Minimum thickness [mm] 20 Vented + S
				Orga 10551→; + ESP		**24.0122-0194.1**	**422194**	Ø 266 Brake Disc Thickness [mm] 22 Minimum thickness [mm] 20 Vented + S
1.6	81	07/06→04/12		→ 07/07; + ESP; Manual Transmission		**24.0122-0194.1**	**422194**	Ø 266 Brake Disc Thickness [mm] 22 Minimum thickness [mm] 20 Vented + S
1.6 16V	80	08/00→11/07		→ 07/07; Manual Transmission; - ESP		**24.0122-0194.1**	**422194**	Ø 266 Brake Disc Thickness [mm] 22 Minimum thickness [mm] 20 Vented + S
				Orga 10551→; + ESP; → 07/07; Manual Transmission		**24.0122-0194.1**	**422194**	Ø 266 Brake Disc Thickness [mm] 22 Minimum thickness [mm] 20 Vented + S
1.6 Flex	83	07/06→12/12		+ ESP; Manual Transmission		**24.0122-0194.1**	**422194**	Ø 266 Brake Disc Thickness [mm] 22 Minimum thickness [mm] 20 Vented + S
1.6 HDi	66	04/05→03/09		→ 07/07; - ESP		**24.0122-0194.1**	**422194**	Ø 266 Brake Disc Thickness [mm] 22 Minimum thickness [mm] 20 Vented + S
				Orga 10551→; → 07/07; + ESP		**24.0122-0194.1**	**422194**	Ø 266 Brake Disc Thickness [mm] 22 Minimum thickness [mm] 20 Vented + S
2.0 HDi 90	66	08/00→03/07		Orga 09520→; - ESP		**24.0122-0194.1**	**422194**	Ø 266 Brake Disc Thickness [mm] 22 Minimum thickness [mm] 20 Vented + S

© 2022 Continental Aftermarket & Services GmbH

	kW				! #			
PEUGEOT - 307 Break (3E) 03/02→12/09								
Guide Bolt, brake caliper								
2.0 16V 2.0 HDi 135	130 100	06/05→04/08 02/04→04/08		Orga 10488→ →Orga 10487	2 2	**11.8171-0008.1** **11.8171-0008.1**	**990049** **990049**	ATE ATE
Brake Pad Set, disc brake								
1.4	55	04/02→09/03	←	Orga 10551→		**13.0460-3994.2** **13.0470-3994.2**	**603994** **LD3994**	BOS 23599 19,0 - WE / - WK + Zub BOS 23599 19,0 - WE / - WK + Zub Ceramic
			←	- ESP		**13.0460-3994.2** **13.0470-3994.2**	**603994** **LD3994**	BOS 23599 19,0 - WE / - WK + Zub BOS 23599 19,0 - WE / - WK + Zub Ceramic
1.4 16V	65	11/03→07/07	←	- ESP		**13.0460-3994.2** **13.0470-3994.2**	**603994** **LD3994**	BOS 23599 19,0 - WE / - WK + Zub BOS 23599 19,0 - WE / - WK + Zub Ceramic
			←	Orga 10551→; + ESP		**13.0460-3994.2** **13.0470-3994.2**	**603994** **LD3994**	BOS 23599 19,0 - WE / - WK + Zub BOS 23599 19,0 - WE / - WK + Zub Ceramic
1.4 HDi	50	03/02→06/05	←			**13.0460-3994.2** **13.0470-3994.2**	**603994** **LD3994**	BOS 23599 19,0 - WE / - WK + Zub BOS 23599 19,0 - WE / - WK + Zub Ceramic
Brake Disc								
1.4 1.4 16V	55 65	04/02→09/03 11/03→07/07	←	- ESP		**24.0122-0194.1**	**422194**	Ø 266 Brake Disc Thickness [mm] 22 Minimum thickness [mm] 20 Vented + S
			←	Orga 10551→; + ESP		**24.0122-0194.1**	**422194**	Ø 266 Brake Disc Thickness [mm] 22 Minimum thickness [mm] 20 Vented + S
1.4 HDi	50	03/02→06/05	←			**24.0122-0194.1**	**422194**	Ø 266 Brake Disc Thickness [mm] 22 Minimum thickness [mm] 20 Vented + S
PEUGEOT - 307 CC (3B) 03/03→06/09								
Guide Bolt, brake caliper								
2.0 16V 2.0 HDi 135	130 100	10/03→04/09 06/05→04/09		Orga 10488→; → 02/09 →Orga 10487	2 2	**11.8171-0008.1** **11.8171-0008.1**	**990049** **990049**	ATE ATE
PEUGEOT - 307 Saloon 01/01→12/12								
Brake Pad Set, disc brake								
1.6	81	08/06→12/12	←	+ ESP; Manual Transmission		**13.0460-3994.2** **13.0470-3994.2**	**603994** **LD3994**	BOS 23599 19,0 - WE / - WK + Zub BOS 23599 19,0 - WE / - WK + Zub Ceramic
Brake Disc								
1.6	81	08/06→12/12	←	+ ESP; Manual Transmission		**24.0122-0194.1**	**422194**	Ø 266 Brake Disc Thickness [mm] 22 Minimum thickness [mm] 20 Vented + S
PEUGEOT - 307 SW (3H) 03/02→12/09								
Guide Bolt, brake caliper								
2.0 HDi 135	100	02/04→04/08		Orga 10488→ →Orga 10487	2 2	**11.8171-0008.1** **11.8171-0008.1**	**990049** **990049**	ATE ATE
Brake Pad Set, disc brake								
1.4 1.4 16V	55 65	04/02→09/03 11/03→07/07	←	- ESP		**13.0460-3994.2** **13.0470-3994.2**	**603994** **LD3994**	BOS 23599 19,0 - WE / - WK + Zub BOS 23599 19,0 - WE / - WK + Zub Ceramic
			←	Orga 10551→; + ESP		**13.0460-3994.2**	**603994**	BOS 23599 19,0 - WE / - WK + Zub

	kW				! #			
PEUGEOT - 307 SW (3H) 03/02→12/09								
Brake Pad Set, disc brake								
1.4 1.4 16V	55 65	04/02→09/03 11/03→07/07		Orga 10551→; + ESP		**13.0470-3994.2**	**LD3994**	BOS 23599 19,0 - WE / - WK + Zub Ceramic
Brake Disc								
1.4 1.4 16V	55 65	04/02→09/03 11/03→07/07		- ESP		**24.0122-0194.1**	**422194**	Ø 266 Brake Disc Thickness [mm] 22 Minimum thickness [mm] 20 Vented + S
				Orga 10551→; + ESP		**24.0122-0194.1**	**422194**	Ø 266 Brake Disc Thickness [mm] 22 Minimum thickness [mm] 20 Vented + S
PEUGEOT - 307 SW Estate Van (3E_, 3H_) 04/02→12/09								
Guide Bolt, brake caliper								
2.0 HDi	100	04/04→11/07		Orga 10488→	2	**11.8171-0008.1**	**990049**	ATE
				→Orga 10487	2	**11.8171-0008.1**	**990049**	ATE
Brake Pad Set, disc brake								
1.4 HDi	51	04/02→06/05				**13.0460-3994.2** **13.0470-3994.2**	**603994** **LD3994**	BOS 23599 19,0 - WE / - WK + Zub BOS 23599 19,0 - WE / - WK + Zub Ceramic
Brake Disc								
1.4 HDi	51	04/02→06/05				**24.0122-0194.1**	**422194**	Ø 266 Brake Disc Thickness [mm] 22 Minimum thickness [mm] 20 Vented + S
PEUGEOT - 308 I (4A_, 4C_) 09/07→12/16								
Spring, brake caliper								
1.6 16V	128	03/08→10/14		Orga 11578→; → 07/13	2	**11.8116-0356.1**	**390586**	ATE
1.6 THP 16V 2.0 HDi	115 120	10/09→10/14 04/12→10/14		→ 07/13	2	**11.8116-0356.1**	**390586**	ATE
2.0 HDi	100	09/07→10/14		11578→ 11678	2	**11.8116-0356.1**	**390586**	ATE
Guide Bolt, brake caliper								
1.6 16V 2.0 HDi	128 100	03/08→10/14 09/07→10/14		→Orga 11577	2	**11.8171-0008.1**	**990049**	ATE
1.6 GTi	147	07/10→10/14		→ 07/13	2	**11.8171-0008.1**	**990049**	ATE
PEUGEOT - 308 II (LB_, LP_, LW_, LH_, L3_) 09/13→06/21								
Guide Bolt, brake caliper								
1.2 THP 110 1.2 THP 130	81 96	11/13→06/21 11/13→06/21		for brake disc diameter [mm]: 304	2	**11.8171-0008.1**	**990049**	ATE
1.2 VTi 72 1.6 BlueHDi 120	60 88	09/13→06/21 11/13→06/21		for brake disc diameter [mm]: 268; - eFSB	2	**11.8171-0008.1**	**990049**	ATE
1.6 GT 205 1.6 GTi 1.6 HDi 1.6 HDi / BlueHDi 115 1.6 HDi 100 1.6 THP 1.6 THP 125 1.6 THP 150 1.6 THP 163 1.6 VTi 115 2.0 BlueHDi 150 2.0 GT BlueHDi 180	151 184 - 200 68 85 73 115 92 110 120 85 110 133	06/14→06/21 06/15→06/21 09/13→06/21 09/13→06/21 04/14→06/21 09/13→06/21 09/13→06/21 03/14→06/21 06/14→06/21 05/15→06/21 11/13→06/21 06/14→06/21		for brake disc diameter [mm]: 249	2	**11.8171-0008.1**	**990049**	ATE
1.5 BlueHDI 100 1.5 BlueHDi 130	75 96	05/18→06/21 06/17→06/21		for brake disc diameter [mm]: 304	2	**11.8171-0008.1**	**990049**	ATE
1.6 GTi PureTech 263 1.6 PureTech 225 1.6 THP 2.0 GT BlueHDi 180	193 165 112 130 - 132	07/18→06/21 01/18→06/21 09/13→06/21 06/17→06/21		for brake disc diameter [mm]: 249 / 268; - eFSB	2	**11.8171-0008.1**	**990049**	ATE
Brake Pad Set, disc brake								
1.2 THP 110 1.2 THP 130 1.2 VTi 72 1.5 BlueHDI 100 1.5 BlueHDi 130	81 96 60 75 96	11/13→06/21 11/13→06/21 09/13→06/21 05/18→06/21 06/17→06/21		for brake disc diameter [mm]: 283		**13.0460-3870.2** **13.0470-3870.2**	**603870** **LD3870**	BOS 25895 18,5 - WE / - WK + Zub BOS 25895 18,5 - WE / - WK + Zub Ceramic

© 2022 Continental Aftermarket & Services GmbH

	kW				! #			
PEUGEOT - 308 II (LB_, LP_, LW_, LH_, L3_) 09/13→06/21								
Brake Pad Set, disc brake								
1.6 BlueHDi 120 1.6 GT 205 1.6 GTi 1.6 GTi PureTech 263 1.6 HDi 1.6 HDi / BlueHDi 115 1.6 HDi 100 1.6 PureTech 225 1.6 THP 1.6 THP 125 1.6 THP 150 1.6 THP 163 1.6 VTi 115 2.0 BlueHDi 150 2.0 GT BlueHDi 180	88 151 184 - 200 193 68 85 73 165 112 - 115 92 110 120 85 110 130 - 133	11/13→06/21 06/14→06/21 06/15→06/21 07/18→06/21 09/13→06/21 09/13→06/21 04/14→06/21 01/18→06/21 09/13→06/21 09/13→06/21 03/14→06/21 06/14→06/21 05/15→06/21 11/13→06/21 06/14→06/21	➡	for brake disc diameter [mm]: 268; + eFSB		**13.0460-3871.2** **13.0470-3871.2**	**603871** **LD3871**	BOS 25839 17,8 - WE / - WK + Zub BOS 25839 17,8 - WE / - WK + Zub Ceramic
PEUGEOT - 308 III (FB_, FH_, FP_, F3_) 07/21→								
Brake Pad Set, disc brake								
BlueHDi 130 Hybrid 180 Hybrid 225 PureTech 110 PureTech 130	96 110 - 133 132 - 165 81 96	07/21→ 07/21→ 07/21→ 07/21→ 07/21→	⬅	for brake disc diameter [mm]: 283		**13.0460-3870.2** **13.0470-3870.2**	**603870** **LD3870**	BOS 25895 18,5 - WE / - WK + Zub BOS 25895 18,5 - WE / - WK + Zub Ceramic
PEUGEOT - 308 CC (4B_) 02/09→12/15								
Spring, brake caliper								
1.6 16V 2.0 CVVT 2.0 HDi	103 - 110 103 100 - 120	06/09→12/14 07/09→12/14 04/09→12/14			2	**11.8116-0356.1**	**390586**	ATE
1.6 16V	115	06/09→12/14		09/09→	2	**11.8116-0356.1**	**390586**	ATE
Guide Bolt, brake caliper								
1.6 16V 1.6 THP 2.0 CVVT 2.0 HDi	103 - 110 147 103 100 - 120	06/09→12/14 10/10→12/14 07/09→12/14 04/09→12/14			2	**11.8171-0008.1**	**990049**	ATE
1.6 16V	115	06/09→12/14		09/09→	2	**11.8171-0008.1**	**990049**	ATE
PEUGEOT - 308 Hatchback Van (LB_) 03/15→								
Guide Bolt, brake caliper								
1.5 BlueHDi 130	96	06/17→06/21	⬅	for brake disc diameter [mm]: 304	2	**11.8171-0008.1**	**990049**	ATE
			➡	for brake disc diameter [mm]: 249 / 268; - eFSB	2	**11.8171-0008.1**	**990049**	ATE
1.6 BlueHDi 120 1.6 e-HDi 115	88 85	03/15→06/21 03/15→06/21	⬅	for brake disc diameter [mm]: 304	2	**11.8171-0008.1**	**990049**	ATE
			➡	for brake disc diameter [mm]: 268; - eFSB	2	**11.8171-0008.1**	**990049**	ATE
			➡	for brake disc diameter [mm]: 249	2	**11.8171-0008.1**	**990049**	ATE
Brake Pad Set, disc brake								
1.5 BlueHDi 130 1.6 BlueHDi 120 1.6 e-HDi 115	96 88 85	06/17→06/21 03/15→06/21 03/15→06/21	⬅	for brake disc diameter [mm]: 283		**13.0460-3870.2** **13.0470-3870.2**	**603870** **LD3870**	BOS 25895 18,5 - WE / - WK + Zub BOS 25895 18,5 - WE / - WK + Zub Ceramic
			➡	for brake disc diameter [mm]: 268; + eFSB		**13.0460-3871.2** **13.0470-3871.2**	**603871** **LD3871**	BOS 25839 17,8 - WE / - WK + Zub BOS 25839 17,8 - WE / - WK + Zub Ceramic
PEUGEOT - 308 SW I (4E_, 4H_) 09/07→10/14								
Spring, brake caliper								
1.6 16V	103 - 128	09/07→10/14		Orga 11578→; → 04/14	2	**11.8116-0356.1**	**390586**	ATE
1.6 THP 16V 2.0 HDi	115 110 - 120	10/09→10/14 06/09→10/14		→ 04/14	2	**11.8116-0356.1**	**390586**	ATE
2.0 Bioflex	103	01/08→12/11		11578→ 11678	2	**11.8116-0356.1**	**390586**	ATE

	kW				! #			
PEUGEOT - 308 SW I (4E_, 4H_) 09/07→10/14								
Spring, brake caliper								
2.0 HDi	100	09/07→12/12		Orga 11578→	2	**11.8116-0356.1**	**390586**	ATE
2.0 HDi	103	09/07→10/14		12/08→ 04/14	2	**11.8116-0356.1**	**390586**	ATE
Guide Bolt, brake caliper								
1.6 16V	103 - 128	09/07→10/14		Orga 11578→; → 04/14	2	**11.8171-0008.1**	**990049**	ATE
				05/08→; →Orga 11577	2	**11.8171-0008.1**	**990049**	ATE
1.6 THP 16V 2.0 HDi	115 110 - 120	10/09→10/14 06/09→10/14		→ 04/14	2	**11.8171-0008.1**	**990049**	ATE
2.0 Bioflex	103	01/08→12/11		05/08→; →Orga 11577	2	**11.8171-0008.1**	**990049**	ATE
				11578→ 11678	2	**11.8171-0008.1**	**990049**	ATE
2.0 HDi	100	09/07→12/12		Orga 11578→	2	**11.8171-0008.1**	**990049**	ATE
				05/08→; →Orga 11577	2	**11.8171-0008.1**	**990049**	ATE
2.0 HDi	103	09/07→10/14		12/08→ 04/14	2	**11.8171-0008.1**	**990049**	ATE
PEUGEOT - 308 SW I Estate Van (4E_) 01/08→12/12								
Spring, brake caliper								
2.0 HDi	100	01/08→12/11		Orga 11578→	2	**11.8116-0356.1**	**390586**	ATE
Guide Bolt, brake caliper								
2.0 HDi	100	01/08→12/11		Orga 11578→	2	**11.8171-0008.1**	**990049**	ATE
				→Orga 11577	2	**11.8171-0008.1**	**990049**	ATE
PEUGEOT - 308 SW II (LC_, LJ_, LR_, LX_, L4_) 03/14→06/21								
Guide Bolt, brake caliper								
1.2 THP 110	81	03/14→06/21	←	08/14→; for brake disc diameter [mm]: 304	2	**11.8171-0008.1**	**990049**	ATE
			→	08/14→; for brake disc diameter [mm]: 249	2	**11.8171-0008.1**	**990049**	ATE
			→	08/14→; for brake disc diameter [mm]: 268; - eFSB	2	**11.8171-0008.1**	**990049**	ATE
1.2 THP 130 1.6 BlueHDi 100 1.6 BlueHDi 120 1.6 GT 205 1.6 HDi / BlueHDi 115 1.6 HDi 92 1.6 THP 125 1.6 THP 150 1.6 THP 155 1.6 VTi 2.0 BlueHDi 150 2.0 GT BlueHDi 180	96 73 88 151 85 68 92 110 115 85 110 132	03/14→06/21 04/14→06/21 03/14→06/21 02/15→06/21 03/14→06/21 03/14→06/21 03/14→06/21 03/14→06/21 03/14→06/21 03/14→06/21 03/14→06/21 06/17→06/21	←	for brake disc diameter [mm]: 304	2	**11.8171-0008.1**	**990049**	ATE
			→	for brake disc diameter [mm]: 268; - eFSB	2	**11.8171-0008.1**	**990049**	ATE
			→	for brake disc diameter [mm]: 249	2	**11.8171-0008.1**	**990049**	ATE
1.5 BlueHDi 100 1.5 BlueHDi 130 1.6 PureTech 225 2.0 GT BlueHDi 180	75 96 165 130	04/18→06/21 06/17→06/21 01/18→06/21 06/17→06/21	←	for brake disc diameter [mm]: 304	2	**11.8171-0008.1**	**990049**	ATE
			→	for brake disc diameter [mm]: 249 / 268; - eFSB	2	**11.8171-0008.1**	**990049**	ATE
2.0 GT HDi 180 / BlueHDi 180	133	06/14→06/21	←	for brake disc diameter [mm]: 268; - eFSB	2	**11.8171-0008.1**	**990049**	ATE
			←	for brake disc diameter [mm]: 304	2	**11.8171-0008.1**	**990049**	ATE
			→	for brake disc diameter [mm]: 249	2	**11.8171-0008.1**	**990049**	ATE
Brake Pad Set, disc brake								
1.2 THP 110	81	03/14→06/21	←	08/14→; for brake disc diameter [mm]: 283		**13.0460-3870.2** **13.0470-3870.2**	**603870** **LD3870**	BOS 25895 18,5 - WE / - WK + Zub BOS 25895 18,5 - WE / - WK + Zub Ceramic
			→	08/14→; for brake disc diameter [mm]: 268; + eFSB		**13.0460-3871.2** **13.0470-3871.2**	**603871** **LD3871**	BOS 25839 17,8 - WE / - WK + Zub BOS 25839 17,8 - WE / - WK + Zub Ceramic
1.2 THP 130 1.5 BlueHDi 100 1.5 BlueHDi 130 1.6 BlueHDi 100 1.6 BlueHDi 120 1.6 GT 205 1.6 HDi / BlueHDi 115 1.6 HDi 92 1.6 PureTech 225 1.6 THP 125 1.6 THP 150	96 75 96 73 88 151 85 68 165 92 110	03/14→06/21 04/18→06/21 06/17→06/21 04/14→06/21 03/14→06/21 02/15→06/21 03/14→06/21 03/14→06/21 01/18→06/21 03/14→06/21 03/14→06/21	←	for brake disc diameter [mm]: 283		**13.0460-3870.2** **13.0470-3870.2**	**603870** **LD3870**	BOS 25895 18,5 - WE / - WK + Zub BOS 25895 18,5 - WE / - WK + Zub Ceramic
			→	for brake disc diameter [mm]: 268; + eFSB		**13.0460-3871.2** **13.0470-3871.2**	**603871** **LD3871**	BOS 25839 17,8 - WE / - WK + Zub BOS 25839 17,8 - WE / - WK + Zub Ceramic

© 2022 Continental Aftermarket & Services GmbH

	kW				! #			
PEUGEOT - 308 SW II (LC_, LJ_, LR_, LX_, L4_) 03/14→06/21								
Brake Pad Set, disc brake								
1.6 THP 155 1.6 VTi 2.0 BlueHDi 150 2.0 GT BlueHDi 180	115 85 110 130 - 132	03/14→06/21 03/14→06/21 03/14→06/21 06/17→06/21	←	for brake disc diameter [mm]: 283		**13.0460-3870.2** **13.0470-3870.2**	**603870** **LD3870**	BOS 25895 18,5 - WE / - WK + Zub BOS 25895 18,5 - WE / - WK + Zub Ceramic
2.0 GT HDi 180 / BlueHDi 180	133	06/14→06/21	→	for brake disc diameter [mm]: 268; + eFSB		**13.0460-3871.2** **13.0470-3871.2**	**603871** **LD3871**	BOS 25839 17,8 - WE / - WK + Zub BOS 25839 17,8 - WE / - WK + Zub Ceramic
PEUGEOT - 308 SW II Estate Van (LC_) 04/14→								
Guide Bolt, brake caliper								
1.5 BlueHDi 130	96	06/17→06/21	←	for brake disc diameter [mm]: 304	2	**11.8171-0008.1**	**990049**	ATE
			→	for brake disc diameter [mm]: 249 / 268; - eFSB	2	**11.8171-0008.1**	**990049**	ATE
1.6 BlueHDi	73	04/14→06/21	←	for brake disc diameter [mm]: 304	2	**11.8171-0008.1**	**990049**	ATE
			→	for brake disc diameter [mm]: 268; - eFSB	2	**11.8171-0008.1**	**990049**	ATE
			→	for brake disc diameter [mm]: 249	2	**11.8171-0008.1**	**990049**	ATE
Brake Pad Set, disc brake								
1.5 BlueHDi 130 1.6 BlueHDi	96 73	06/17→06/21 04/14→06/21	←	for brake disc diameter [mm]: 283		**13.0460-3870.2** **13.0470-3870.2**	**603870** **LD3870**	BOS 25895 18,5 - WE / - WK + Zub BOS 25895 18,5 - WE / - WK + Zub Ceramic
			→	for brake disc diameter [mm]: 268; + eFSB		**13.0460-3871.2** **13.0470-3871.2**	**603871** **LD3871**	BOS 25839 17,8 - WE / - WK + Zub BOS 25839 17,8 - WE / - WK + Zub Ceramic
PEUGEOT - 308 SW III (FC_, FJ_, FR_, F4_) 07/21→								
Brake Pad Set, disc brake								
BlueHDi 130 Hybrid 180 Hybrid 225 PureTech 110 PureTech 130	96 110 - 133 132 - 165 81 96	07/21→ 07/21→ 07/21→ 07/21→ 07/21→	←	for brake disc diameter [mm]: 283		**13.0460-3870.2** **13.0470-3870.2**	**603870** **LD3870**	BOS 25895 18,5 - WE / - WK + Zub BOS 25895 18,5 - WE / - WK + Zub Ceramic
PEUGEOT - 405 II (4B) 01/92→12/99								
Accessory Kit, brake shoes								
1.4 1.6 1.8 1.9 D	55 - 58 65 74 47 - 51	08/92→10/95 08/92→10/95 08/92→10/95 08/92→10/95	→	S 71407667→; - ABS		**03.0137-9228.2**	**669228**	BDX
PEUGEOT - 406 (8B) 08/95→01/05								
Accessory Kit, brake shoes								
1.6 1.8 1.9 D 1.9 TD	65 66 55 66 - 68	11/95→05/04 05/97→05/04 10/96→05/04 01/96→05/04	→	→ 04/04		**03.0137-9228.2**	**669228**	BDX
1.8 1.8 16V 1.9 TD	74 81 69	10/96→03/99 11/95→10/00 10/95→10/97	→			**03.0137-9228.2**	**669228**	BDX
1.8 Bifuel	81	04/99→05/03	→	→ 10/00		**03.0137-9228.2**	**669228**	BDX
Accessory Kit, parking brake shoes								
1.8 16V 1.8 BiFuel 2.0 2.0 16V 3.0 24V	85 85 104 99 143	10/00→05/04 09/00→05/04 11/96→03/99 01/99→08/00 01/98→06/99				**03.0137-9700.2**	**669700**	
2.0 16V 2.0 16V HPi 2.0 HDi 110 2.0 HDI 90 2.0 Turbo 2.1 TD 12V 2.2	97 - 100 103 79 66 108 80 116	11/95→06/04 05/01→05/04 08/01→05/04 02/99→05/04 04/96→05/04 01/96→05/04 07/00→05/04		→ 04/04		**03.0137-9700.2**	**669700**	

	kW				! #			
PEUGEOT - 406 (8B) 08/95→01/05								
Accessory Kit, parking brake shoes								
2.2 HDi 3.0 24V 3.0 V6	98 140 152	03/00→05/04 10/96→05/04 03/00→05/04		→ 04/04		**03.0137-9700.2**	**669700**	
2.0 HDI 110	80	06/98→08/01		02/99→		**03.0137-9700.2**	**669700**	
PEUGEOT - 406 Break (8E/F) 10/96→10/04								
Accessory Kit, brake shoes								
1.8 1.9 D 1.9 TD	66 55 66	05/97→10/04 10/96→10/04 10/96→10/04	➡	→ 04/04		**03.0137-9228.2**	**669228**	BDX
1.8 1.8 16V	74 81	10/96→03/99 10/96→10/00	➡			**03.0137-9228.2**	**669228**	BDX
Accessory Kit, parking brake shoes								
1.8 16V 2.0 16V 2.0 16V HPi 2.0 HDi 110 2.0 HDI 90 2.0 Turbo 2.1 TD 12V 2.2 2.2 HDi 3.0 24V 3.0 V6	85 97 - 100 103 79 66 108 80 116 98 140 152	10/00→10/04 10/96→10/04 05/01→10/04 08/01→10/04 02/99→10/04 10/96→10/04 10/96→10/04 07/00→10/04 03/00→10/04 10/96→10/04 03/00→10/04		→ 04/04		**03.0137-9700.2**	**669700**	
1.8 BiFuel 2.0 2.0 16V	85 104 99	10/00→02/04 11/96→03/99 01/99→10/00				**03.0137-9700.2**	**669700**	
2.0 HDI 110	80	02/99→04/04		→ 08/01		**03.0137-9700.2**	**669700**	
PEUGEOT - 406 Coupe (8C) 03/97→02/05								
Accessory Kit, parking brake shoes								
2.0 16V 2.2 2.2 HDI 3.0 24V 3.0 V6 3.0 V6 24V	97 - 100 116 98 143 152 140	03/97→12/04 03/02→12/04 03/00→12/04 05/97→06/99 03/00→12/04 03/97→12/04				**03.0137-9700.2**	**669700**	
2.0 16V	99	04/99→09/04		→ 10/00		**03.0137-9700.2**	**669700**	
3.0 V6	154	03/99→06/01		03/00→		**03.0137-9700.2**	**669700**	
PEUGEOT - 407 (6D_) 02/04→12/11								
Spring, brake caliper								
2.0 HDi	103 - 120	06/09→12/10			2	**11.8116-0356.1**	**390586**	ATE
2.0 HDi 2.0 HDi 135	93 100	11/04→10/07 05/04→10/10		Orga 11683→	2	**11.8116-0356.1**	**390586**	ATE
PEUGEOT - 407 Coupe (6C_) 10/05→								
Spring, brake caliper								
2.0 HDi	120	06/09→		→ 12/11	2	**11.8116-0356.1**	**390586**	ATE
PEUGEOT - 407 SW (6E_) 05/04→12/11								
Spring, brake caliper								
2.0 HDi 2.0 HDi 135	93 100	11/04→10/07 07/04→12/10		Orga 11683→	2	**11.8116-0356.1**	**390586**	ATE
2.0 HDi	103 - 120	08/08→12/10			2	**11.8116-0356.1**	**390586**	ATE
PEUGEOT - 407 SW Estate Van (6E_) 08/04→12/10								
Spring, brake caliper								
2.0 HDi	103 - 120	06/09→12/10			2	**11.8116-0356.1**	**390586**	ATE
PEUGEOT - 508 I (8D_) 11/10→12/18								
Spring, brake caliper								
1.6 BlueHDi 120 1.6 HDi	88 82 -	03/14→12/18 11/10→12/18	⬅	for brake disc diameter [mm]: 304; for brake disc thickness [mm]: 28	2	**11.8116-0356.1**	**390586**	ATE
1.6 THP 1.6 VTi	85 110 - 121 85 - 88	11/10→12/18 11/10→12/18	⬅	for brake disc diameter [mm]: 283; for brake disc thickness [mm]: 26	2	**11.8116-0356.1**	**390586**	ATE

© 2022 Continental Aftermarket & Services GmbH

	kW				! #			
PEUGEOT - 508 I (8D_) 11/10→12/18								
Spring, brake caliper								
2.0 BlueHDi 150 2.0 BlueHDi 180 2.0 HDi 2.0 HDi Hybrid4 AWC 2.2 HDi	110 133 100 - 120 120 150	04/14→12/18 04/14→12/18 11/10→12/18 11/10→12/18 11/10→12/18	←	for brake disc diameter [mm]: 304; for brake disc thickness [mm]: 28	2	**11.8116-0356.1**	**390586**	ATE
			←	for brake disc diameter [mm]: 283; for brake disc thickness [mm]: 26	2	**11.8116-0356.1**	**390586**	ATE
2.0 HDi Hybrid4 AWC	147	11/10→12/18	←	06/12→; for brake disc thickness [mm]: 28; for brake disc diameter [mm]: 304	2	**11.8116-0356.1**	**390586**	ATE
			←	06/12→; for brake disc thickness [mm]: 26; for brake disc diameter [mm]: 283	2	**11.8116-0356.1**	**390586**	ATE
Guide Bolt, brake caliper								
1.6 BlueHDi 120 1.6 HDi 1.6 THP 1.6 VTi 2.0 BlueHDi 150 2.0 BlueHDi 180 2.0 HDi 2.0 HDi Hybrid4 AWC 2.2 HDi	88 82 - 85 110 - 121 85 - 88 110 133 100 - 120 120 150	03/14→12/18 11/10→12/18 11/10→12/18 11/10→12/18 04/14→12/18 04/14→12/18 11/10→12/18 11/10→12/18 11/10→12/18		for brake disc diameter [mm]: 340; for brake disc thickness [mm]: 30	2	**11.8171-0008.1**	**990049**	ATE
2.0 HDi Hybrid4 AWC	147	11/10→12/18		06/12→; for brake disc diameter [mm]: 340; for brake disc thickness [mm]: 30	2	**11.8171-0008.1**	**990049**	ATE
PEUGEOT - 508 II (FB_, FH_, F3_) 09/18→								
Guide Bolt, brake caliper								
1.5 BlueHDI 130 1.6 PureTech 180 1.6 PureTech 225 1.6 THP 150 1.6 THP 165 2.0 BlueHDI 160 2.0 BlueHDI 180 Hybrid 225 PureTech 130	96 133 165 110 121 120 130 133 - 165 96	10/18→ 10/18→ 10/18→ 09/18→ 09/18→ 10/18→ 10/18→ 08/19→ 06/20→	←	for brake disc diameter [mm]: 304; →Orga 16246		**11.8171-0008.1**	**990049**	ATE
Brake Pad Set, disc brake								
1.5 BlueHDI 130 1.6 PureTech 180 1.6 PureTech 225 1.6 THP 150 1.6 THP 165 2.0 BlueHDI 160 2.0 BlueHDI 180 PureTech 130	96 133 165 110 121 120 130 96	10/18→ 10/18→ 10/18→ 09/18→ 09/18→ 10/18→ 10/18→ 06/20→	←	for brake disc diameter [mm]: 304; →Orga 16246		**13.0460-7339.2**	**607339**	ATE + WE / - WK
			→	for brake disc diameter [mm]: 268		**13.0460-3871.2** **13.0470-3871.2**	**603871** **LD3871**	BOS 25839 17,8 - WE / - WK + Zub BOS 25839 17,8 - WE / - WK + Zub Ceramic
Hybrid 225	133 - 165	08/19→	←	for brake disc diameter [mm]: 304; →Orga 16246		**13.0460-7339.2**	**607339**	ATE + WE / - WK
PEUGEOT - 508 SW I (8E_) 11/10→12/18								
Spring, brake caliper								
1.6 1.6 BlueHDi 120 1.6 HDi 1.6 THP 1.6 VTi 2.0 BlueHDi 150 2.0 BlueHDi 180 2.0 HDi 2.0 HDi 180 RXH 2.0 HDi RXH Hybrid4 2.2 HDi	121 88 82 - 85 110 - 115 85 - 88 110 133 100 - 120 133 120 150	02/12→12/18 03/14→12/18 11/10→12/18 11/10→12/18 11/10→12/18 04/14→12/18 04/14→12/18 11/10→12/18 10/14→12/18 11/10→12/18 11/10→12/18	←	for brake disc diameter [mm]: 304; for brake disc thickness [mm]: 28	2	**11.8116-0356.1**	**390586**	ATE
			←	for brake disc diameter [mm]: 283; for brake disc thickness [mm]: 26	2	**11.8116-0356.1**	**390586**	ATE
Guide Bolt, brake caliper								
1.6 1.6 BlueHDi 120 1.6 HDi 1.6 THP	121 88 82 - 85 110 - 115	02/12→12/18 03/14→12/18 11/10→12/18 11/10→12/18		for brake disc diameter [mm]: 340; for brake disc thickness [mm]: 30	2	**11.8171-0008.1**	**990049**	ATE

	kW				! #			
PEUGEOT - 508 SW I (8E_) 11/10→12/18								
Guide Bolt, brake caliper								
1.6 VTi	85 - 88	11/10→12/18		for brake disc diameter [mm]: 340; for brake disc thickness [mm]: 30	2	**11.8171-0008.1**	**990049**	ATE
2.0 BlueHDi 150	110	04/14→12/18						
2.0 BlueHDi 180	133	04/14→12/18						
2.0 HDi	100 - 120	11/10→12/18						
2.0 HDi 180 RXH	133	10/14→12/18						
2.0 HDi RXH Hybrid4	120	11/10→12/18						
2.2 HDi	150	11/10→12/18						
PEUGEOT - 508 SW II (FC_, FJ_, F4_) 09/18→								
Guide Bolt, brake caliper								
1.5 BlueHDi 130	96	09/18→	←	for brake disc diameter [mm]: 304; →Orga 16246		**11.8171-0008.1**	**990049**	ATE
1.6 PureTech 180	133	09/18→						
1.6 PureTech 225	165	09/18→						
1.6 THP 165	121	09/18→						
2.0 BlueHDi 160	120	09/18→						
2.0 BlueHDi 180	130	09/18→						
Hybrid 224	133 - 165	08/19→						
PureTech 130	96	06/20→						
Brake Pad Set, disc brake								
1.5 BlueHDi 130	96	09/18→	←	for brake disc diameter [mm]: 304; →Orga 16246		**13.0460-7339.2**	**607339**	ATE + WE / - WK
1.6 PureTech 180	133	09/18→						
1.6 PureTech 225	165	09/18→	→	for brake disc diameter [mm]: 268		**13.0460-3871.2**	**603871**	BOS 25839 17,8 - WE / - WK + Zub
1.6 THP 165	121	09/18→						
2.0 BlueHDi 160	120	09/18→						
2.0 BlueHDi 180	130	09/18→				**13.0470-3871.2**	**LD3871**	BOS 25839 17,8 - WE / - WK + Zub Ceramic
PureTech 130	96	06/20→						
Hybrid 224	133 - 165	08/19→	←	for brake disc diameter [mm]: 304; →Orga 16246		**13.0460-7339.2**	**607339**	ATE + WE / - WK
PEUGEOT - 508 SW Estate Van (8E_) 11/11→								
Spring, brake caliper								
1.6 HDi	84	03/13→12/18	←	for brake disc diameter [mm]: 304; for brake disc thickness [mm]: 28	2	**11.8116-0356.1**	**390586**	ATE
2.0 HDi	103 - 120	03/13→12/18						
2.2 HDi	150	11/11→	←	for brake disc diameter [mm]: 283; for brake disc thickness [mm]: 26	2	**11.8116-0356.1**	**390586**	ATE
Guide Bolt, brake caliper								
1.6 HDi	84	03/13→12/18		for brake disc diameter [mm]: 340; for brake disc thickness [mm]: 30	2	**11.8171-0008.1**	**990049**	ATE
2.0 HDi	103 - 120	03/13→12/18						
2.2 HDi	150	11/11→						
PEUGEOT - 605 (6B) 06/89→09/99								
Guide Bolt, brake caliper								
3.0	147	08/89→06/94	←	S 90807684→	2	**11.8171-0008.1**	**990049**	ATE
3.0 SV 24	147	08/89→09/99						
3.0 V6	140	04/97→09/99	←		2	**11.8171-0008.1**	**990049**	ATE
PEUGEOT - 607 (9D, 9U) 01/00→								
Accessory Kit, parking brake shoes								
2.0	100	02/00→08/05		→ 11/04		**03.0137-9700.2**	**669700**	
2.0 HDI	80	05/00→09/05						
2.2 16V	116	02/00→08/05						
2.2 HDi	98	02/00→02/06						
2.0 HDi	79	03/01→09/04		→ 07/04		**03.0137-9700.2**	**669700**	
3.0 V6 24V	152	02/00→07/04				**03.0137-9700.2**	**669700**	
PEUGEOT - 806 (221) 06/94→08/02								
Accessory Kit, parking brake shoes								
1.8	73	07/95→08/02		10/96→ 06/02		**03.0137-9700.2**	**669700**	
1.9 TD	66 - 68	07/95→08/02		→ 06/02		**03.0137-9700.2**	**669700**	
2.0 16V	100	09/00→08/02						
2.0 HDI	80	08/99→08/02						
2.0 HDI 16V	80	08/99→08/02						
2.0	89	06/94→08/02		08/94→ 06/02		**03.0137-9700.2**	**669700**	
2.0 Turbo	108	06/94→08/02						
2.0 16V	97	05/98→09/00		10/98→		**03.0137-9700.2**	**669700**	
2.1 td 12V	80	06/96→08/99				**03.0137-9700.2**	**669700**	

© 2022 Continental Aftermarket & Services GmbH

	kW				! #			
PEUGEOT - 1007 (KM_) 04/05→								
Brake Pad Set, disc brake								
1.4 1.4 16V 1.4 HDi 1.6 16V	54 65 50 80	04/05→ 10/05→ 04/05→ 04/05→		→ 02/11		**13.0460-3994.2** **13.0470-3994.2**	**603994** **LD3994**	BOS 23599 19,0 - WE / - WK + Zub BOS 23599 19,0 - WE / - WK + Zub Ceramic
Brake Disc								
1.4 1.4 16V 1.4 HDi 1.6 16V	54 65 50 80	04/05→ 10/05→ 04/05→ 04/05→		→ 02/11		**24.0122-0194.1**	**422194**	Ø 266 Brake Disc Thickness [mm] 22 Minimum thickness [mm] 20 Vented + S
PEUGEOT - 2008 I (CU_) 03/13→								
Brake Pad Set, disc brake								
1.2 PureTech 82 1.2 THP 110 / PureTech 110 1.2 THP 130 / PureTech 130 1.2 VTi 1.4 HDi 1.5 BlueHDI 100 1.5 BlueHDI 120 1.6 BlueHDi 1.6 BlueHDi 100 1.6 BlueHDi 120 1.6 BlueHDi 75 1.6 HDi 1.6 THP 165 1.6 VTi	61 81 96 60 50 75 88 85 73 88 55 68 - 84 121 85 - 88	01/18→12/19 01/15→ 01/15→ 03/13→12/18 06/13→ 05/18→ 05/18→ 07/14→ 01/15→ 07/14→ 01/15→ 03/13→ 02/16→ 03/13→		for brake disc diameter [mm]: 266		**13.0460-3994.2** **13.0470-3994.2**	**603994** **LD3994**	BOS 23599 19,0 - WE / - WK + Zub BOS 23599 19,0 - WE / - WK + Zub Ceramic
Brake Disc								
1.2 PureTech 82 1.2 THP 110 / PureTech 110 1.2 THP 130 / PureTech 130 1.2 VTi 1.4 HDi 1.5 BlueHDI 100 1.5 BlueHDI 120 1.6 BlueHDi 1.6 BlueHDi 100 1.6 BlueHDi 120 1.6 BlueHDi 75 1.6 HDi 1.6 THP 165 1.6 VTi	61 81 96 60 50 75 88 85 73 88 55 68 - 84 121 85 - 88	01/18→12/19 01/15→ 01/15→ 03/13→12/18 06/13→ 05/18→ 05/18→ 07/14→ 01/15→ 07/14→ 01/15→ 03/13→ 02/16→ 03/13→				**24.0122-0194.1**	**422194**	Ø 266 Brake Disc Thickness [mm] 22 Minimum thickness [mm] 20 Vented + S
PEUGEOT - 2008 I Van (CU_) 03/13→								
Brake Pad Set, disc brake								
BlueHDi 100 BlueHDi 120 PureTech 130	75 88 96	05/18→ 05/18→ 01/18→		for brake disc diameter [mm]: 266		**13.0460-3994.2** **13.0470-3994.2**	**603994** **LD3994**	BOS 23599 19,0 - WE / - WK + Zub BOS 23599 19,0 - WE / - WK + Zub Ceramic
Brake Disc								
BlueHDi 100 BlueHDi 120 PureTech 130	75 88 96	05/18→ 05/18→ 01/18→				**24.0122-0194.1**	**422194**	Ø 266 Brake Disc Thickness [mm] 22 Minimum thickness [mm] 20 Vented + S
PEUGEOT - 2008 II (UD_, US_, UY_, UK_) 08/19→								
Spring, brake caliper								
1.2 PureTech 100 1.2 PureTech 130 1.2 THP / PureTech 155 1.5 BlueHDI 100 1.5 BlueHDI 110 1.5 BlueHDI 130 e-2008	74 96 114 75 81 96 100	11/19→ 08/19→ 11/19→ 08/19→ 01/21→ 08/19→ 09/19→		for brake disc diameter [mm]: 302; →Orga 16246		**11.8116-0356.1**	**390586**	ATE

	kW				! #			
PEUGEOT - 2008 II (UD_, US_, UY_, UK_) 08/19→								
Brake Pad Set, disc brake								
e-2008	100	09/19→				**13.0460-3871.2**	**603871**	BOS 25839 17,8 - WE / - WK + Zub
						13.0470-3871.2	**LD3871**	BOS 25839 17,8 - WE / - WK + Zub Ceramic
PEUGEOT - 3008 MPV (0U_) 05/09→12/17								
Spring, brake caliper								
1.6 THP	110 - 120	06/09→08/16			2	**11.8116-0356.1**	**390586**	ATE
1.6 Turbo	121	05/14→08/16						
2.0 HDi	100 - 120	06/09→08/16						
2.0 HDi 150 / BlueHDi 150	110	06/09→08/16						
2.0 HDi Hybrid4	120 - 147	02/11→08/16			2	**11.8116-0356.1**	**390586**	ATE
Guide Bolt, brake caliper								
1.6 THP	110 - 120	06/09→08/16			2	**11.8171-0008.1**	**990049**	ATE
1.6 Turbo	121	05/14→08/16						
2.0 HDi	100 - 120	06/09→08/16						
2.0 HDi 150 / BlueHDi 150	110	06/09→08/16						
2.0 HDi Hybrid4	120 - 147	02/11→08/16						
PEUGEOT - 3008 SUV (MC_, MR_, MJ_, M4_) 05/16→								
Guide Bolt, brake caliper								
1.2 THP/ PureTech 130	96	05/16→		for brake disc diameter [mm]: 304; →Orga 16246		**11.8171-0008.1**	**990049**	ATE
1.5 BlueHDi 130	96	02/18→						
1.6 BlueHDi 100	73	11/16→						
1.6 BlueHDi 115	85	11/16→						
1.6 BlueHDi 120	88	05/16→						
1.6 PureTech 180	133	07/18→						
1.6 THP 150	110	11/17→						
1.6 THP 165	121	05/16→						
2.0 BlueHDi 136	100	11/16→						
2.0 BlueHDi 150	110	05/16→						
2.0 BlueHDi 180	130 - 133	05/16→						
Hybrid	133 - 165	10/19→						
Hybrid4	147 - 220	10/19→						
Brake Pad Set, disc brake								
1.2 THP/ PureTech 130	96	05/16→		for brake disc diameter [mm]: 304; →Orga 16246		**13.0460-7339.2**	**607339**	ATE + WE / - WK
1.5 BlueHDi 130	96	02/18→						
1.6 BlueHDi 100	73	11/16→		for brake disc diameter [mm]: 268		**13.0460-3871.2**	**603871**	BOS 25839 17,8 - WE / - WK + Zub
1.6 BlueHDi 115	85	11/16→						
1.6 BlueHDi 120	88	05/16→						
1.6 PureTech 180	133	07/18→				**13.0470-3871.2**	**LD3871**	BOS 25839 17,8 - WE / - WK + Zub Ceramic
1.6 THP 150	110	11/17→						
1.6 THP 165	121	05/16→						
2.0 BlueHDi 136	100	11/16→						
2.0 BlueHDi 150	110	05/16→						
2.0 BlueHDi 180	130 - 133	05/16→						
Hybrid	133 - 165	10/19→						
Hybrid4	147 - 220	10/19→						
PEUGEOT - 3008 Van (0U_) 05/09→12/17								
Spring, brake caliper								
HDi	120	06/09→08/16			2	**11.8116-0356.1**	**390586**	ATE
HDi 150	110	06/09→08/16						
Guide Bolt, brake caliper								
HDi	120	06/09→08/16			2	**11.8171-0008.1**	**990049**	ATE
HDi 150	110	06/09→08/16						
PEUGEOT - 3008 Van (MR_, MC_, MJ_) 05/16→								
Guide Bolt, brake caliper								
BlueHDi 130	96	02/18→		for brake disc diameter [mm]: 304; →Orga 16246		**11.8171-0008.1**	**990049**	ATE
BlueHDi 180	130	01/18→						
PureTech 130	96	05/16→						

© 2022 Continental Aftermarket & Services GmbH

	kW				! #			
PEUGEOT - 3008 Van (MR_, MC_, MJ_) 05/16→								
Brake Pad Set, disc brake								
BlueHDi 130 BlueHDi 180 PureTech 130	96 130 96	02/18→ 01/18→ 05/16→	←	for brake disc diameter [mm]: 304; →Orga 16246		**13.0460-7339.2**	**607339**	ATE + WE / - WK
			→	for brake disc diameter [mm]: 268		**13.0460-3871.2** **13.0470-3871.2**	**603871** **LD3871**	BOS 25839 17,8 - WE / - WK + Zub BOS 25839 17,8 - WE / - WK + Zub Ceramic
PEUGEOT - 5008 (0U_, 0E_) 06/09→03/17								
Spring, brake caliper								
1.2 1.6 16V 1.6 BlueHDi 115 1.6 BlueHDi 120 1.6 HDi 1.6 THP 150 1.6 THP 163 1.6 THP 165 2.0 HDi 2.0 HDi 136 / BlueHDi 136	96 88 - 115 85 88 80 - 84 110 120 121 120 100	01/15→03/17 09/09→03/17 11/14→03/17 05/14→03/17 09/09→03/17 02/12→03/17 02/12→03/17 02/12→03/17 09/09→03/17 02/12→03/17	←		2	**11.8116-0356.1**	**390586**	ATE
2.0 HDi 150 / BlueHDi 150	110	06/09→03/17	←	09/09→	2	**11.8116-0356.1**	**390586**	ATE
Guide Bolt, brake caliper								
1.2 1.6 16V 1.6 BlueHDi 115 1.6 BlueHDi 120 1.6 HDi 1.6 THP 150 1.6 THP 163 1.6 THP 165 2.0 HDi 2.0 HDi 136 / BlueHDi 136 2.0 HDi 150 / BlueHDi 150	96 88 - 115 85 88 80 - 84 110 120 121 120 100 110	01/15→03/17 09/09→03/17 11/14→03/17 05/14→03/17 09/09→03/17 02/12→03/17 02/12→03/17 02/12→03/17 09/09→03/17 02/12→03/17 06/09→03/17	←		2	**11.8171-0008.1**	**990049**	ATE
PEUGEOT - 5008 I Van (0U_) 06/09→03/17								
Spring, brake caliper								
HDi / e-HDi HDi HDi 136 HDi 150 HDi 165	84 82 100 110 120	03/13→03/17 08/10→03/17 02/12→03/17 06/09→03/17 06/09→03/17	←		2	**11.8116-0356.1**	**390586**	ATE
Guide Bolt, brake caliper								
HDi / e-HDi HDi HDi 136 HDi 150 HDi 165	84 82 100 110 120	03/13→03/17 08/10→03/17 02/12→03/17 06/09→03/17 06/09→03/17	←		2	**11.8171-0008.1**	**990049**	ATE
PEUGEOT - 5008 II (MC_, MJ_, MR_, M4_) 12/16→								
Guide Bolt, brake caliper								
1.2 1.5 BlueHDi 130 1.6 1.6 BlueHDi 100 1.6 BlueHDi 115 1.6 BlueHDi 120 1.6 PureTech 180 1.6 THP 165 2.0 BlueHDi 136 2.0 BlueHDi 150 2.0 BlueHDi 180	96 96 110 73 85 88 133 121 100 110 130 - 133	12/16→ 02/18→ 07/18→ 12/16→ 12/16→ 12/16→ 07/18→ 12/16→ 12/16→ 12/16→ 12/16→	←	→Orga 16354		**11.8171-0008.1**	**990049**	ATE
Brake Pad Set, disc brake								
1.2 1.5 BlueHDi 130 1.6 1.6 BlueHDi 100 1.6 BlueHDi 115 1.6 BlueHDi 120	96 96 110 73 85 88	12/16→ 02/18→ 07/18→ 12/16→ 12/16→ 12/16→	←	→Orga 16354		**13.0460-7339.2**	**607339**	ATE + WE / - WK

	kW				! #			
PEUGEOT - 5008 II (MC_, MJ_, MR_, M4_) 12/16→								
Brake Pad Set, disc brake								
1.6 PureTech 180 1.6 THP 165 2.0 BlueHDi 136 2.0 BlueHDi 150 2.0 BlueHDi 180	133 121 100 110 130 - 133	07/18→ 12/16→ 12/16→ 12/16→ 12/16→		→Orga 16354		**13.0460-7339.2**	**607339**	ATE + WE / - WK
PEUGEOT - 5008 II Van (MC_, MJ_) 12/16→								
Guide Bolt, brake caliper								
BlueHDi 130 BlueHDi 180	96 130	02/18→ 01/18→		→Orga 16354		**11.8171-0008.1**	**990049**	ATE
Brake Pad Set, disc brake								
BlueHDi 130 BlueHDi 180	96 130	02/18→ 01/18→		→Orga 16354		**13.0460-7339.2**	**607339**	ATE + WE / - WK
PEUGEOT - BIPPER (AA_) 02/08→								
Accessory Kit, brake shoes								
1.3 HDi 75 1.3 HDi 80 / BlueHDi 80	55 59	10/10→ 12/15→				**03.0137-9309.2**	**669309**	AP
1.4 HDi	50	02/08→		→ 09/10		**03.0137-9309.2**	**669309**	AP
PEUGEOT - BIPPER TEPEE 04/08→								
Accessory Kit, brake shoes								
1.3 HDi 75 1.3 HDi 80	55 59	10/10→ 12/15→				**03.0137-9309.2**	**669309**	AP
1.4 HDi	50	04/08→		→ 09/10		**03.0137-9309.2**	**669309**	AP
PEUGEOT - BOXER Bus (230P) 03/94→04/02								
Brake Shoe Set								
1.9 D	51	03/94→04/02		11/01→ 03/02; Payload [kg]: 1,000; not for motor home		**03.0137-0432.2**	**650432**	AP Ø 254 Width [mm] 57 + HEB
1.9 TD 1.9 TD 4x4 2.0 i 2.0 i 4x4	66 - 68 68 80 80	03/94→04/02 07/96→04/02 03/94→04/02 08/96→04/02		11/01→ 03/02; Payload from [kg] 1,000 Payload to [kg] 1,400; not for motor home		**03.0137-0432.2**	**650432**	AP Ø 254 Width [mm] 57 + HEB
2.5 D 2.5 D 4x4 2.5 TD 2.5 TD 4x4 2.5 TDI 2.5 TDI 4x4 2.8 HDI	63 63 76 76 79 79 94	08/94→04/02 07/96→04/02 07/94→04/02 07/96→04/02 01/97→04/02 01/97→04/02 11/00→04/02		11/01→ 03/02; Payload [kg]: 1,400; not for motor home		**03.0137-0432.2**	**650432**	AP Ø 254 Width [mm] 57 + HEB
2.5 DT	62	10/97→11/01		11/01→; Payload [kg]: 1,400; not for motor home		**03.0137-0432.2**	**650432**	AP Ø 254 Width [mm] 57 + HEB
2.8 D	64	01/99→02/02		S 16204256→; Payload [kg]: 1,400; not for motor home		**03.0137-0432.2**	**650432**	AP Ø 254 Width [mm] 57 + HEB
2.8 HDi 4x4	94	10/00→04/02		S 16204256→; → 03/02; Payload from [kg] 1,000 Payload to [kg] 1,400; not for motor home		**03.0137-0432.2**	**650432**	AP Ø 254 Width [mm] 57 + HEB
2.8 HDi All-wheel Drive	93	10/00→11/01		S 16204256→; Payload from [kg] 1,000 Payload to [kg] 1,400; not for motor home		**03.0137-0432.2**	**650432**	AP Ø 254 Width [mm] 57 + HEB
PEUGEOT - BOXER Bus (244, Z_) 12/01→								
Brake Shoe Set								
2.0 2.0 HDi 2.2 HDi 2.8 HDi 2.8 HDi 4x4	81 62 74 94 - 107 94	04/02→ 04/02→ 04/02→ 04/02→ 04/02→		→ 03/06; Payload from [kg] 1,000 Payload to [kg] 1,400; not for motor home		**03.0137-0432.2**	**650432**	AP Ø 254 Width [mm] 57 + HEB
2.0 BiFuel	81	12/01→06/06		04/02→ 03/06; Payload from [kg] 1,000 Payload to [kg] 1,400; not for motor home		**03.0137-0432.2**	**650432**	AP Ø 254 Width [mm] 57 + HEB
2.8 HDi	90	03/02→08/05		Payload from [kg] 1,000 Payload to [kg] 1,400; not for motor home		**03.0137-0432.2**	**650432**	AP Ø 254 Width [mm] 57 + HEB
PEUGEOT - BOXER Platform/Chassis (244) 12/01→								
Brake Shoe Set								
2.0 BiFuel	81	12/01→06/06		04/02→ 03/06; Payload from [kg] 1,000 Payload to [kg] 1,400; not for motor home		**03.0137-0432.2**	**650432**	AP Ø 254 Width [mm] 57 + HEB

© 2022 Continental Aftermarket & Services GmbH

	kW				! #			
PEUGEOT - BOXER Platform/Chassis (244) 12/01→								
Brake Shoe Set								
2.0 HDi 2.2 HDi 2.8 HDi 2.8 HDi 4x4	62 74 94 - 107 94	04/02→ 04/02→ 04/02→ 04/02→	➡	→ 03/06; Payload from [kg] 1,000 Payload to [kg] 1,400; not for motor home		**03.0137-0432.2**	**650432**	AP Ø 254 Width [mm] 57 + HEB
PEUGEOT - BOXER Platform/Chassis (ZCT_) 03/94→04/02								
Brake Shoe Set								
1.9 D	51	03/94→04/02	➡	S 16204256→; Payload from [kg] 1,000 Payload to [kg] 1,400; not for motor home		**03.0137-0432.2**	**650432**	AP Ø 254 Width [mm] 57 + HEB
1.9 TD 2.0 i	66 - 68 80	06/94→04/02 06/94→04/02	➡	11/01→ 03/02; Payload from [kg] 1,000 Payload to [kg] 1,400; not for motor home		**03.0137-0432.2**	**650432**	AP Ø 254 Width [mm] 57 + HEB
2.0	81	12/01→04/02	➡	→ 03/02; Payload from [kg] 1,000 Payload to [kg] 1,400; not for motor home		**03.0137-0432.2**	**650432**	AP Ø 254 Width [mm] 57 + HEB
2.5 D 2.5 D 4x4 2.5 TD 2.5 TDI 2.5 TDI 4x4 2.8 HDI	63 63 76 79 79 94	03/94→04/02 07/99→04/02 03/94→04/02 01/97→04/02 07/99→04/02 11/00→04/02	➡	11/01→ 03/02; Payload [kg]: 1,400; not for motor home		**03.0137-0432.2**	**650432**	AP Ø 254 Width [mm] 57 + HEB
2.8 D	64	01/99→02/02	➡	S 16204256→; Payload [kg]: 1,400; not for motor home		**03.0137-0432.2**	**650432**	AP Ø 254 Width [mm] 57 + HEB
2.8 HDi All-wheel Drive	93	10/00→11/01	➡	11/01→; Payload [kg]: 1,400; not for motor home		**03.0137-0432.2**	**650432**	AP Ø 254 Width [mm] 57 + HEB
PEUGEOT - BOXER Van (230L) 03/94→08/05								
Brake Shoe Set								
1.9 D	50 - 51	03/94→04/02	➡	11/01→ 03/02; Payload [kg]: 1,000; not for motor home		**03.0137-0432.2**	**650432**	AP Ø 254 Width [mm] 57 + HEB
1.9 TD 2.0 HDI 2.0 i	66 - 68 62 80	03/94→04/02 08/01→04/02 06/94→04/02	➡	11/01→ 03/02; Payload from [kg] 1,000 Payload to [kg] 1,400; not for motor home		**03.0137-0432.2**	**650432**	AP Ø 254 Width [mm] 57 + HEB
2.5 D 2.5 D 4x4 2.5 TD 2.5 TDI 2.5 TDI 4x4 2.8 HDI 2.8 HDi 4x4	63 63 76 79 79 94 94	03/94→04/02 07/99→04/02 03/94→04/02 01/97→04/02 07/99→04/02 11/00→04/02 10/00→04/02	➡	11/01→ 03/02; Payload [kg]: 1,400; not for motor home		**03.0137-0432.2**	**650432**	AP Ø 254 Width [mm] 57 + HEB
2.5 DT 2.8 HDi 4x4	62 93	10/97→11/01 10/00→11/01	➡	11/01→; Payload [kg]: 1,400; not for motor home		**03.0137-0432.2**	**650432**	AP Ø 254 Width [mm] 57 + HEB
2.8 D	64	01/99→02/02	➡	S 16204256→; Payload [kg]: 1,400; not for motor home		**03.0137-0432.2**	**650432**	AP Ø 254 Width [mm] 57 + HEB
PEUGEOT - BOXER Van (244) 12/01→								
Brake Shoe Set								
2.0 2.0 HDi 2.2 HDi 2.8 HDi	81 62 74 93 - 107	04/02→ 04/02→ 04/02→ 04/04→	➡	→ 03/06; Payload from [kg] 1,000 Payload to [kg] 1,400; not for motor home		**03.0137-0432.2**	**650432**	AP Ø 254 Width [mm] 57 + HEB
2.0 BiFuel	81	12/01→06/06	➡	04/02→ 03/06; Payload from [kg] 1,000 Payload to [kg] 1,400; not for motor home		**03.0137-0432.2**	**650432**	AP Ø 254 Width [mm] 57 + HEB
2.3 HDi 2.8 HDi 2.8 HDi 4x4	93 90 - 94 94	02/07→ 03/02→ 04/02→	➡	Payload from [kg] 1,000 Payload to [kg] 1,400; not for motor home		**03.0137-0432.2**	**650432**	AP Ø 254 Width [mm] 57 + HEB
PEUGEOT - PARTNER Box Body/MPV 04/08→								
Spring, brake caliper								
1.2 THP 1.6 HDi	81 82	02/16→ 08/10→	⬅			**11.8116-0356.1**	**390586**	ATE
1.6 1.6 BlueHDi 100 1.6 BlueHDi 120 1.6 HDi 1.6 HDi 16V 1.6 HDi 16V 4x4 1.6 HDi 90	66 - 88 73 88 55 - 84 66 - 68 66 68	04/08→ 04/15→ 04/15→ 04/08→ 04/08→ 04/12→ 04/10→	⬅		2	**11.8116-0356.1**	**390586**	ATE

	kW				! #			
PEUGEOT - PARTNER Box Body/MPV 04/08→								
Spring, brake caliper								
Électrique	49	06/13→			2	**11.8116-0356.1**	**390586**	ATE
1.6 HDi / BlueHDi 75	55	07/11→		01/15→	2	**11.8116-0356.1**	**390586**	ATE
Guide Bolt, brake caliper								
1.2 THP 1.6 HDi	81 82	02/16→ 08/10→				**11.8171-0008.1**	**990049**	ATE
1.6 1.6 BlueHDi 100 1.6 BlueHDi 120 1.6 HDi 1.6 HDi 16V 1.6 HDi 16V 4x4 1.6 HDi 90 Électrique	66 - 88 73 88 55 - 84 66 - 68 66 68 49	04/08→ 04/15→ 04/15→ 04/08→ 04/08→ 04/12→ 04/10→ 06/13→			2	**11.8171-0008.1**	**990049**	ATE
1.6 HDi / BlueHDi 75	55	07/11→		01/15→	2	**11.8171-0008.1**	**990049**	ATE
PEUGEOT - PARTNER Box Body/MPV (5_, G_) 06/96→								
Brake Pad Set, disc brake								
1.1	44	06/96→09/05		10/02→		**13.0460-3994.2** **13.0470-3994.2**	**603994** **LD3994**	BOS 23599 19,0 - WE / - WK + Zub BOS 23599 19,0 - WE / - WK + Zub Ceramic
1.4 1.4 BiFuel 1.6 1.6 Bioflex 1.6 HDi 75 1.6 HDI 92	48 - 54 55 80 80 55 68	11/02→12/10 04/03→10/06 09/00→10/02 09/00→10/02 08/05→07/08 11/09→12/10				**13.0460-3994.2** **13.0470-3994.2**	**603994** **LD3994**	BOS 23599 19,0 - WE / - WK + Zub BOS 23599 19,0 - WE / - WK + Zub Ceramic
1.4	55	06/96→12/15		10/02→ 03/08		**13.0460-3994.2** **13.0470-3994.2**	**603994** **LD3994**	BOS 23599 19,0 - WE / - WK + Zub BOS 23599 19,0 - WE / - WK + Zub Ceramic
1.6 HDi 90	66	08/05→12/15		→ 03/08		**13.0460-3994.2** **13.0470-3994.2**	**603994** **LD3994**	BOS 23599 19,0 - WE / - WK + Zub BOS 23599 19,0 - WE / - WK + Zub Ceramic
1.8 D 1.9 D 1.9 D 4x4	43 - 44 50 - 51 51	06/96→12/02 06/96→12/02 04/04→07/11		Orga 09128→		**13.0460-3994.2** **13.0470-3994.2**	**603994** **LD3994**	BOS 23599 19,0 - WE / - WK + Zub BOS 23599 19,0 - WE / - WK + Zub Ceramic
1.9 D	51	06/96→12/15		Orga 09128→; → 03/08		**13.0460-3994.2** **13.0470-3994.2**	**603994** **LD3994**	BOS 23599 19,0 - WE / - WK + Zub BOS 23599 19,0 - WE / - WK + Zub Ceramic
2.0 HDi	66	04/00→07/08		Orga 09128→; → 03/08; - ESP		**13.0460-3994.2** **13.0470-3994.2**	**603994** **LD3994**	BOS 23599 19,0 - WE / - WK + Zub BOS 23599 19,0 - WE / - WK + Zub Ceramic
2.0 HDi 4x4	66	04/04→08/05		Orga 09128→; - ESP		**13.0460-3994.2** **13.0470-3994.2**	**603994** **LD3994**	BOS 23599 19,0 - WE / - WK + Zub BOS 23599 19,0 - WE / - WK + Zub Ceramic
Electric	25	06/96→12/02		01/98→		**13.0460-3994.2** **13.0470-3994.2**	**603994** **LD3994**	BOS 23599 19,0 - WE / - WK + Zub BOS 23599 19,0 - WE / - WK + Zub Ceramic
Brake Disc								
1.1	44	06/96→09/05		10/02→		**24.0122-0194.1**	**422194**	Ø 266 Brake Disc Thickness [mm] 22 Minimum thickness [mm] 20 Vented + S
1.4 1.4 BiFuel 1.6 1.6 Bioflex 1.6 HDi 75 1.6 HDI 92	48 - 54 55 80 80 55 68	11/02→12/10 04/03→10/06 09/00→10/02 09/00→10/02 08/05→07/08 11/09→12/10				**24.0122-0194.1**	**422194**	Ø 266 Brake Disc Thickness [mm] 22 Minimum thickness [mm] 20 Vented + S

© 2022 Continental Aftermarket & Services GmbH

	kW				! #			
PEUGEOT - PARTNER Box Body/MPV (5_, G_) 06/96→								
Brake Disc								
1.4	55	06/96→12/15	←	10/02→ 03/08		**24.0122-0194.1**	**422194**	Ø 266 Brake Disc Thickness [mm] 22 Minimum thickness [mm] 20 Vented + S
1.6 HDi 90	66	08/05→12/15	←	→ 03/08		**24.0122-0194.1**	**422194**	Ø 266 Brake Disc Thickness [mm] 22 Minimum thickness [mm] 20 Vented + S
1.8 D 1.9 D 1.9 D 4x4	43 - 44 50 - 51 51	06/96→12/02 06/96→12/02 04/04→07/11	←	Orga 09128→		**24.0122-0194.1**	**422194**	Ø 266 Brake Disc Thickness [mm] 22 Minimum thickness [mm] 20 Vented + S
1.9 D	51	06/96→12/15	←	Orga 09128→; → 03/08		**24.0122-0194.1**	**422194**	Ø 266 Brake Disc Thickness [mm] 22 Minimum thickness [mm] 20 Vented + S
2.0 HDi	66	04/00→07/08	←	Orga 09128→; → 03/08; - ESP		**24.0122-0194.1**	**422194**	Ø 266 Brake Disc Thickness [mm] 22 Minimum thickness [mm] 20 Vented + S
2.0 HDi 4x4	66	04/04→08/05	←	Orga 09128→; - ESP		**24.0122-0194.1**	**422194**	Ø 266 Brake Disc Thickness [mm] 22 Minimum thickness [mm] 20 Vented + S
Electric	25	06/96→12/02	←	01/98→		**24.0122-0194.1**	**422194**	Ø 266 Brake Disc Thickness [mm] 22 Minimum thickness [mm] 20 Vented + S
PEUGEOT - PARTNER Box Body/MPV (K9) 09/18→								
Guide Bolt, brake caliper								
1.2 PureTech 110 1.2 PureTech 130 1.5 BlueHDi 100 1.5 BlueHDI 130 1.5 BlueHDI 130 4x4 1.5 BlueHDi 75 1.6 BlueHDI 100 1.6 BlueHDI 75 e-Partner	81 96 75 96 96 55 73 55 100	07/19→ 07/19→ 07/19→ 09/18→ 09/18→ 07/19→ 09/18→ 09/18→ 07/21→	←		2	**11.8171-0008.1**	**990049**	ATE
Brake Pad Set, disc brake								
1.2 PureTech 110 1.2 PureTech 130 1.5 BlueHDi 100 1.5 BlueHDI 130 1.5 BlueHDI 130 4x4 1.5 BlueHDi 75 1.6 BlueHDI 100 1.6 BlueHDI 75 e-Partner	81 96 75 96 96 55 73 55 100	07/19→ 07/19→ 07/19→ 09/18→ 09/18→ 07/19→ 09/18→ 09/18→ 07/21→	←	for brake disc diameter [mm]: 283		**13.0460-3870.2** **13.0470-3870.2**	**603870** **LD3870**	BOS 25895 18,5 - WE / - WK + Zub BOS 25895 18,5 - WE / - WK + Zub Ceramic
			←	for brake disc diameter [mm]: 304; →Orga 16246		**13.0460-7339.2**	**607339**	ATE + WE / - WK
			→	+ eFSB		**13.0460-3871.2** **13.0470-3871.2**	**603871** **LD3871**	BOS 25839 17,8 - WE / - WK + Zub BOS 25839 17,8 - WE / - WK + Zub Ceramic
PEUGEOT - PARTNER MPV (5_, G_) 05/96→12/15								
Brake Pad Set, disc brake								
1.1	44	06/96→10/02	←	10/02→		**13.0460-3994.2** **13.0470-3994.2**	**603994** **LD3994**	BOS 23599 19,0 - WE / - WK + Zub BOS 23599 19,0 - WE / - WK + Zub Ceramic
1.4 1.6 HDI 92 1.9 D 4x4	54 68 51	11/02→10/06 11/09→12/10 04/04→08/05	←			**13.0460-3994.2** **13.0470-3994.2**	**603994** **LD3994**	BOS 23599 19,0 - WE / - WK + Zub BOS 23599 19,0 - WE / - WK + Zub Ceramic
1.4	55	06/96→12/15	←	10/02→ 03/08		**13.0460-3994.2** **13.0470-3994.2**	**603994** **LD3994**	BOS 23599 19,0 - WE / - WK + Zub BOS 23599 19,0 - WE / - WK + Zub Ceramic
1.6 16V 1.6 Flexfuel 2.0 HDi 4x4	80 80 66	07/01→03/08 09/00→10/02 04/04→08/05	←	Orga 09128→; - ESP		**13.0460-3994.2** **13.0470-3994.2**	**603994** **LD3994**	BOS 23599 19,0 - WE / - WK + Zub BOS 23599 19,0 - WE / - WK + Zub Ceramic
1.6 HDi 75	55	08/05→07/08	←	→ 03/08; - ESP		**13.0460-3994.2**	**603994**	BOS 23599 19,0 - WE / - WK + Zub

	kW				! #			
PEUGEOT - PARTNER MPV (5_, G_) 05/96→12/15								
Brake Pad Set, disc brake								
1.6 HDi 75	55	08/05→07/08		→ 03/08; - ESP		**13.0470-3994.2**	**LD3994**	BOS 23599 19,0 - WE / - WK + Zub Ceramic
1.6 HDi 90	66	08/05→12/15		02/06→ 03/08; - ESP		**13.0460-3994.2** **13.0470-3994.2**	**603994** **LD3994**	BOS 23599 19,0 - WE / - WK + Zub BOS 23599 19,0 - WE / - WK + Zub Ceramic
1.8 1.9 D	66 50 - 51	05/97→12/02 05/96→12/02		Orga 09128→		**13.0460-3994.2** **13.0470-3994.2**	**603994** **LD3994**	BOS 23599 19,0 - WE / - WK + Zub BOS 23599 19,0 - WE / - WK + Zub Ceramic
1.9 D	51	01/99→07/08		Orga 09128→; → 03/08		**13.0460-3994.2** **13.0470-3994.2**	**603994** **LD3994**	BOS 23599 19,0 - WE / - WK + Zub BOS 23599 19,0 - WE / - WK + Zub Ceramic
2.0 HDI	66	02/00→07/08		Orga 09128→; → 03/08; - ESP		**13.0460-3994.2** **13.0470-3994.2**	**603994** **LD3994**	BOS 23599 19,0 - WE / - WK + Zub BOS 23599 19,0 - WE / - WK + Zub Ceramic
Brake Disc								
1.1	44	06/96→10/02		10/02→		**24.0122-0194.1**	**422194**	Ø 266 Brake Disc Thickness [mm] 22 Minimum thickness [mm] 20 Vented + S
1.4 1.6 HDI 92 1.9 D 4x4	54 68 51	11/02→10/06 11/09→12/10 04/04→08/05				**24.0122-0194.1**	**422194**	Ø 266 Brake Disc Thickness [mm] 22 Minimum thickness [mm] 20 Vented + S
1.4 1.9 D	55 51	06/96→12/15 01/99→07/08		Orga 09128→; → 03/08		**24.0122-0194.1**	**422194**	Ø 266 Brake Disc Thickness [mm] 22 Minimum thickness [mm] 20 Vented + S
1.6 16V 1.6 Flexfuel 2.0 HDi 4x4	80 80 66	07/01→03/08 09/00→10/02 04/04→08/05		Orga 09128→; - ESP		**24.0122-0194.1**	**422194**	Ø 266 Brake Disc Thickness [mm] 22 Minimum thickness [mm] 20 Vented + S
1.6 HDi 75	55	08/05→07/08		→ 03/08; - ESP		**24.0122-0194.1**	**422194**	Ø 266 Brake Disc Thickness [mm] 22 Minimum thickness [mm] 20 Vented + S
1.6 HDi 90	66	08/05→12/15		02/06→ 03/08; - ESP		**24.0122-0194.1**	**422194**	Ø 266 Brake Disc Thickness [mm] 22 Minimum thickness [mm] 20 Vented + S
1.8 1.9 D	66 50 - 51	05/97→12/02 05/96→12/02		Orga 09128→		**24.0122-0194.1**	**422194**	Ø 266 Brake Disc Thickness [mm] 22 Minimum thickness [mm] 20 Vented + S
2.0 HDI	66	02/00→07/08		Orga 09128→; → 03/08; - ESP		**24.0122-0194.1**	**422194**	Ø 266 Brake Disc Thickness [mm] 22 Minimum thickness [mm] 20 Vented + S
PEUGEOT - PARTNER ORIGIN Box Body/MPV (G_) 07/08→12/15								
Brake Pad Set, disc brake								
1.4 1.6 HDi 75 1.6 HDi 90 1.9 D Electric	55 55 66 51 42	08/08→12/15 08/08→12/15 08/08→12/15 08/08→12/15 01/11→12/12				**13.0460-3994.2** **13.0470-3994.2**	**603994** **LD3994**	BOS 23599 19,0 - WE / - WK + Zub BOS 23599 19,0 - WE / - WK + Zub Ceramic
1.6	81	09/11→12/15		for brake disc diameter [mm]: 266		**13.0460-3994.2** **13.0470-3994.2**	**603994** **LD3994**	BOS 23599 19,0 - WE / - WK + Zub BOS 23599 19,0 - WE / - WK + Zub Ceramic
Brake Disc								
1.4 1.6 1.6 HDi 75 1.6 HDi 90 1.9 D Electric	55 81 55 66 51 42	08/08→12/15 09/11→12/15 08/08→12/15 08/08→12/15 08/08→12/15 01/11→12/12				**24.0122-0194.1**	**422194**	Ø 266 Brake Disc Thickness [mm] 22 Minimum thickness [mm] 20 Vented + S

© 2022 Continental Aftermarket & Services GmbH

	kW				! #			
PEUGEOT - PARTNER ORIGIN MPV (G_) 07/08→12/13								
Brake Pad Set, disc brake								
1.4 1.6 HDi 75 1.9 D	55 55 51	07/08→12/13 08/08→12/13 08/08→12/13				**13.0460-3994.2** **13.0470-3994.2**	**603994** **LD3994**	BOS 23599 19,0 - WE / - WK + Zub BOS 23599 19,0 - WE / - WK + Zub Ceramic
1.6 16V	81	09/11→12/13		for brake disc diameter [mm]: 266		**13.0460-3994.2** **13.0470-3994.2**	**603994** **LD3994**	BOS 23599 19,0 - WE / - WK + Zub BOS 23599 19,0 - WE / - WK + Zub Ceramic
Brake Disc								
1.4 1.6 16V 1.6 HDi 75 1.9 D	55 81 55 51	07/08→12/13 09/11→12/13 08/08→12/13 08/08→12/13				**24.0122-0194.1**	**422194**	Ø 266 Brake Disc Thickness [mm] 22 Minimum thickness [mm] 20 Vented + S
PEUGEOT - PARTNER Platform/Chassis 01/09→								
Spring, brake caliper								
1.6 BlueHDi 100 1.6 HDi 1.6 HDi 16V	73 55 - 66 66	04/15→ 01/09→ 01/09→			2	**11.8116-0356.1**	**390586**	ATE
Guide Bolt, brake caliper								
1.6 BlueHDi 100 1.6 HDi 1.6 HDi 16V	73 55 - 66 66	04/15→ 01/09→ 01/09→			2	**11.8171-0008.1**	**990049**	ATE
PEUGEOT - PARTNER Platform/Chassis (5_, G_) 03/97→07/08								
Brake Pad Set, disc brake								
1.6 1.6 HDi 75	80 55	09/00→05/08 02/06→07/08				**13.0460-3994.2** **13.0470-3994.2**	**603994** **LD3994**	BOS 23599 19,0 - WE / - WK + Zub BOS 23599 19,0 - WE / - WK + Zub Ceramic
1.9 D	51	01/99→07/08		Orga 09128→; → 03/08		**13.0460-3994.2** **13.0470-3994.2**	**603994** **LD3994**	BOS 23599 19,0 - WE / - WK + Zub BOS 23599 19,0 - WE / - WK + Zub Ceramic
2.0 HDi	66	11/02→07/08		Orga 09128→; → 03/08; - ESP		**13.0460-3994.2** **13.0470-3994.2**	**603994** **LD3994**	BOS 23599 19,0 - WE / - WK + Zub BOS 23599 19,0 - WE / - WK + Zub Ceramic
Brake Disc								
1.6 1.6 HDi 75	80 55	09/00→05/08 02/06→07/08				**24.0122-0194.1**	**422194**	Ø 266 Brake Disc Thickness [mm] 22 Minimum thickness [mm] 20 Vented + S
1.9 D	51	01/99→07/08		Orga 09128→; → 03/08		**24.0122-0194.1**	**422194**	Ø 266 Brake Disc Thickness [mm] 22 Minimum thickness [mm] 20 Vented + S
2.0 HDi	66	11/02→07/08		Orga 09128→; → 03/08; - ESP		**24.0122-0194.1**	**422194**	Ø 266 Brake Disc Thickness [mm] 22 Minimum thickness [mm] 20 Vented + S
PEUGEOT - PARTNER TEPEE 04/08→								
Spring, brake caliper								
1.2 THP 1.6 BlueHDi 100 1.6 BlueHDi 100 4x4 1.6 BlueHDi 120 1.6 HDi 1.6 HDi / BlueHDi 75 1.6 HDi 16V 1.6 HDi 75 1.6 HDi 90 1.6 VTi	81 73 73 88 66 - 84 55 66 55 68 66 - 88	02/16→ 12/14→ 04/15→ 12/14→ 04/08→ 06/08→12/18 04/08→ 06/08→ 04/10→ 04/08→			2	**11.8116-0356.1**	**390586**	ATE
1.6 VTi	81	09/08→		04/10→	2	**11.8116-0356.1**	**390586**	ATE
Électrique	49	06/13→				**11.8116-0356.1**	**390586**	ATE

	kW				! #			
PEUGEOT - PARTNER TEPEE 04/08→								
Guide Bolt, brake caliper								
1.2 THP 1.6 BlueHDi 100 1.6 BlueHDi 100 4x4 1.6 BlueHDi 120 1.6 HDi 1.6 HDi / BlueHDi 75 1.6 HDi 16V 1.6 HDi 90 1.6 VTi	81 73 73 88 66 - 84 55 66 68 66 - 88	02/16→ 12/14→ 04/15→ 12/14→ 04/08→ 06/08→12/18 04/08→ 04/10→ 04/08→	←		2	**11.8171-0008.1**	**990049**	ATE
1.6 HDi 75 Électrique	55 49	06/08→ 06/13→	←			**11.8171-0008.1**	**990049**	ATE
1.6 VTi	81	09/08→	←	04/10→	2	**11.8171-0008.1**	**990049**	ATE
PEUGEOT - RCZ 03/10→12/15								
Spring, brake caliper								
1.6 16V 1.6 THP 150	115 110	03/10→12/15 03/11→12/15			2	**11.8116-0356.1**	**390586**	ATE
2.0 HDi	120	03/10→12/15		Rim Size [in]: 18	2	**11.8116-0356.1**	**390586**	ATE
Guide Bolt, brake caliper								
1.6 16V 1.6 THP 150	115 - 150 110	03/10→12/15 03/11→12/15			2	**11.8171-0008.1**	**990049**	ATE
2.0 HDi	120	03/10→12/15		Rim Size [in]: 18	2	**11.8171-0008.1**	**990049**	ATE
				Rim Size [in]: 19	2	**11.8171-0008.1**	**990049**	ATE
PEUGEOT - RIFTER 09/18→								
Guide Bolt, brake caliper								
1.2 PureTech 110 1.2 PureTech 130 1.5 BlueHDi 100 1.5 BlueHDi 130 1.5 BlueHDi 75 1.6 BlueHDi 100 1.6 HDi 75 / BlueHDi 75 1.6 HDi 92 e-Rifter	81 96 75 96 55 73 55 68 100	09/18→ 07/19→ 09/18→ 09/18→ 09/18→ 09/18→ 09/18→ 09/18→ 07/21→	←		2	**11.8171-0008.1**	**990049**	ATE
Brake Pad Set, disc brake								
1.2 PureTech 110 1.2 PureTech 130 1.5 BlueHDi 100 1.5 BlueHDi 130 1.5 BlueHDi 75 1.6 BlueHDi 100 1.6 HDi 75 / BlueHDi 75 1.6 HDi 92 e-Rifter	81 96 75 96 55 73 55 68 100	09/18→ 07/19→ 09/18→ 09/18→ 09/18→ 09/18→ 09/18→ 09/18→ 07/21→	←	for brake disc diameter [mm]: 283		**13.0460-3870.2** **13.0470-3870.2**	**603870** **LD3870**	BOS 25895 18,5 - WE / - WK + Zub BOS 25895 18,5 - WE / - WK + Zub Ceramic
			←	for brake disc diameter [mm]: 304; →Orga 16246		**13.0460-7339.2**	**607339**	ATE + WE / - WK
			→	+ eFSB		**13.0460-3871.2** **13.0470-3871.2**	**603871** **LD3871**	BOS 25839 17,8 - WE / - WK + Zub BOS 25839 17,8 - WE / - WK + Zub Ceramic
PIAGGIO - PORTER Bus 01/95→								
Brake Shoe Set								
1.2 D 1.3 1.3 CNG 1.3 LPG	47 52 - 61 54 52 - 61	01/11→ 01/11→ 07/16→ 01/11→	→	for dual tyres		**03.0137-0432.2**	**650432**	AP Ø 254 Width [mm] 57 + HEB
PIAGGIO - PORTER Platform/Chassis 12/92→								
Brake Shoe Set								
1.2 D 1.3 1.3 4x4 1.3 CNG 1.3 LPG	47 52 - 61 52 52 - 54 51 - 61	01/11→ 01/11→ 01/11→ 01/11→ 01/11→	→	for dual tyres		**03.0137-0432.2**	**650432**	AP Ø 254 Width [mm] 57 + HEB

© 2022 Continental Aftermarket & Services GmbH

	kW				! #			
PIAGGIO - PORTER Van 12/92→								
Brake Shoe Set								
1.2 D	47	01/11→		for dual tyres		**03.0137-0432.2**	**650432**	AP Ø 254 Width [mm] 57 + HEB
1.3	52 - 61	01/11→						
1.3 4x4	52	01/11→						
1.3 CNG	54	07/16→						
1.3 LPG	52 - 61	01/11→						
POLESTAR - POLESTAR 1 (P) 03/18→								
Guide Bolt, brake caliper								
PHEV AWD	227 - 448	03/18→				**11.8171-0008.1**	**990049**	ATE
POLESTAR - POLESTAR 2 (P) 02/19→								
Guide Bolt, brake caliper								
EV	300	04/19→				**11.8171-0008.1**	**990049**	ATE
PORSCHE - 718 BOXSTER (982) 04/16→								
Accessory Kit, parking brake shoes								
2.0 T	220	04/16→				**03.0137-9700.2**	**669700**	
2.5 GTS	269	10/17→						
2.5 S	257	04/16→						
GTS 4.0	294	01/19→						
PORSCHE - 718 BOXSTER Spyder (982) 07/19→								
Accessory Kit, parking brake shoes								
4.0	309	07/19→				**03.0137-9700.2**	**669700**	
PORSCHE - 718 CAYMAN (982) 04/16→								
Accessory Kit, parking brake shoes								
2.0	220	04/16→				**03.0137-9700.2**	**669700**	
2.5 GTS	269	10/17→						
4.0 GT4	309	07/19→						
GTS 4.0	294	01/19→						
S 2.5	257	04/16→						
PORSCHE - 911 (991) 12/11→								
Accessory Kit, parking brake shoes								
3.0 Carrera	272	11/15→				**03.0137-9700.2**	**669700**	
3.0 Carrera 4	272	11/15→						
3.0 Carrera 4 GTS	331	03/17→						
3.0 Carrera 4S	309	11/15→						
3.0 Carrera GTS	331	03/17→						
3.0 Carrera S	309	11/15→						
3.0 Carrera T	272	01/18→						
3.4 Carrera	257	12/11→						
3.4 Carrera 4	257	11/12→						
3.8 Carrera 4S	294	11/12→						
3.8 Carrera 4S / 4 GTS	316	11/12→						
3.8 Carrera S	294	12/11→						
3.8 Carrera S / GTS	316	07/12→						
3.8 GT2 RS	515	07/17→						
3.8 GT3	350	08/13→						
3.8 Turbo	383 - 397	09/13→						
3.8 Turbo S	412 - 446	09/13→						
4.0 GT3	368	05/17→						
4.0 GT3 RS	383	05/18→						
4.0 GT3 RS / R	368	04/15→						
PORSCHE - 911 (992) 11/18→								
Accessory Kit, parking brake shoes								
3.0 Carrera	283	01/19→				**03.0137-9700.2**	**669700**	
3.0 Carrera 4	283	01/19→						
3.0 Carrera 4 GTS	353	01/21→						
3.0 Carrera 4 S	331	01/19→						
3.0 Carrera GTS	353	01/21→						
3.0 Carrera S	331	01/19→						
3.8 TURBO	427	03/20→						
3.8 Turbo	427	03/20→						
3.8 Turbo S	478	03/20→						
GT3	375	05/21→						

	kW				! #			
PORSCHE - 911 Convertible (991) 03/12→								
Accessory Kit, parking brake shoes								
3.0 Carrera	272	11/15→				**03.0137-9700.2**	**669700**	
3.0 Carrera 4	272	11/15→						
3.0 Carrera 4 GTS	331	03/17→						
3.0 Carrera 4S	309	11/15→						
3.0 Carrera GTS	331	03/17→						
3.0 Carrera S	309	11/15→						
3.4 Carrera	257	03/12→						
3.4 Carrera 4	257	11/12→						
3.8 Carrera 4S	294	11/12→						
3.8 Carrera 4S / 4 GTS	316	11/12→						
3.8 Carrera S	294	03/12→						
3.8 Carrera S / GTS	316	07/12→						
3.8 Turbo	383 - 397	12/13→						
3.8 Turbo S	412 - 427	12/13→						
PORSCHE - 911 Convertible (992) 01/19→								
Accessory Kit, parking brake shoes								
3.0 Carrera	283	01/19→				**03.0137-9700.2**	**669700**	
3.0 Carrera 4	283	01/19→						
3.0 Carrera 4 GTS	353	01/21→						
3.0 Carrera 4 S	331	01/19→						
3.0 Carrera GTS	353	01/21→						
3.0 Carrera S	331	01/19→						
3.8 Turbo	427	03/20→						
3.8 TURBO S	478	03/20→						
3.8 Turbo S	478	03/20→						
PORSCHE - 911 Speedster (991) 06/18→								
Accessory Kit, parking brake shoes								
4.0	375	06/18→				**03.0137-9700.2**	**669700**	
PORSCHE - 911 Targa (991) 05/14→								
Accessory Kit, parking brake shoes								
3.0 Carrera 4	272	11/15→				**03.0137-9700.2**	**669700**	
3.0 Carrera 4 GTS	331	03/17→						
3.0 Carrera 4S	309	11/15→						
3.4 Carrera 4	257	05/14→						
3.8 Carrera 4S	294	05/14→						
3.8 Carrera 4S / 4 GTS	316	05/14→						
PORSCHE - 911 Targa (992) 05/20→								
Accessory Kit, parking brake shoes								
3.0 4	283	05/20→				**03.0137-9700.2**	**669700**	
3.0 4S	331	05/20→						
4 GTS	353	01/21→						
PORSCHE - 918 Spyder 11/13→								
Accessory Kit, parking brake shoes								
4.6 Plug-in Hybrid	426 - 652	11/13→				**03.0137-9700.2**	**669700**	
PORSCHE - 928 09/77→11/95								
Guide Bolt, brake caliper								
4.5	177	09/77→08/82		92A0800750→	2	**11.8171-0008.1**	**990049**	ATE
4.7 S	221	09/79→07/83			2	**11.8171-0008.1**	**990049**	ATE
4.7 S	228	08/83→07/86		→ 12/85	2	**11.8171-0008.1**	**990049**	ATE
PORSCHE - BOXSTER (981) 04/12→								
Accessory Kit, parking brake shoes								
2.7	155 - 195	04/12→				**03.0137-9700.2**	**669700**	
GTS 3.4	243	02/14→						
S 3.4	232	04/12→						
PORSCHE - BOXSTER Spyder (981) 01/15→								
Accessory Kit, parking brake shoes								
3.8	276	01/15→				**03.0137-9700.2**	**669700**	
PORSCHE - CAYENNE (9PA) 09/02→12/10								
Sensor, wheel speed								
3.0 TDI	176	02/09→09/10	←	→ 04/10;		**24.0711-5401.3**	**360330**	
3.6	213	02/07→09/10						

© 2022 Continental Aftermarket & Services GmbH

	kW				! #		
PORSCHE - CAYENNE (9PA) 09/02→12/10							
Sensor, wheel speed							
GTS 4.8 S 4.8 Turbo S 4.8	298 283 368 - 404	10/07→09/10 02/07→09/10 02/07→09/10	← → →	→ 04/10; → 04/10; → 04/10;		**24.0711-5402.3**	**360331**
						24.0711-5401.3	**360330**
						24.0711-5402.3	**360331**
3.2	177	08/03→09/07	←	10/03→ 12/06;		**24.0711-5401.3**	**360330**
			←	10/03→ 12/06;		**24.0711-5402.3**	**360331**
			→	10/03→ 12/06;		**24.0711-5401.3**	**360330**
			→	10/03→ 12/06;		**24.0711-5402.3**	**360331**
3.2 S 4.5 Turbo 4.5	184 250 331	10/03→09/07 09/02→09/07 09/02→09/07	← ←	→ 12/06; → 12/06;		**24.0711-5401.3**	**360330**
						24.0711-5402.3	**360331**
			→	→ 12/06;		**24.0711-5401.3**	**360330**
			→	→ 12/06;		**24.0711-5402.3**	**360331**
Turbo 4.8 Turbo S 4.5	373 368 - 383	09/07→12/09 01/04→09/07	←			**24.0711-5401.3**	**360330**
			←			**24.0711-5402.3**	**360331**
			→			**24.0711-5401.3**	**360330**
			→			**24.0711-5402.3**	**360331**
Accessory Kit, parking brake shoes							
3.0 TDI 3.6 GTS 4.8 S 4.8 Turbo S 4.8	176 213 298 283 368	02/09→09/10 02/07→09/10 10/07→09/10 02/07→09/10 02/07→09/10		→ 04/10		**03.0137-9700.2**	**669700**
3.2	177	08/03→09/07		10/03→ 12/06		**03.0137-9700.2**	**669700**
3.2 S 4.5 Turbo 4.5	184 250 331	10/03→09/07 09/02→09/07 09/02→09/07		→ 12/06		**03.0137-9700.2**	**669700**
Turbo 4.8	373	09/07→12/09				**03.0137-9700.2**	**669700**
PORSCHE - CAYENNE (9YA) 05/17→							
Accessory Kit, parking brake shoes							
2.9 S AWD 3.0 AWD 3.0 E-Hybrid AWD 4.0 GTS 4.0 Turbo AWD 4.0 Turbo GT AWD 4.0 Turbo S E-Hybrid AWD	324 250 250 - 340 338 404 471 500	05/17→ 05/17→ 05/17→ 06/20→ 05/17→ 06/20→ 06/21→				**03.0137-9700.2**	**669700**
PORSCHE - CAYENNE (92A) 06/10→							
Accessory Kit, parking brake shoes							
3.0 Diesel 3.0 S E-Hybrid 3.6 4.8 S 4.8 Turbo	155 - 176 245 220 294 368 - 397	06/10→ 06/10→ 06/10→ 06/10→ 06/10→	→	01/11→		**03.0137-9354.2**	**669354**
3.0 Diesel 3.0 S E-Hybrid 3.6 GTS 3.6 S 4.2 S Diesel 4.8 GTS 4.8 Turbo 4.8 Turbo S	180 - 193 306 324 309 281 - 283 309 382 405 - 419	06/11→ 10/14→ 02/15→ 10/14→ 10/12→ 06/12→ 10/14→ 10/12→	→			**03.0137-9354.2**	**669354**
3.0 Diesel	184	08/14→	→	10/14→		**03.0137-9354.2**	**669354**
PORSCHE - CAYENNE Coupe (9YB) 01/19→							
Accessory Kit, parking brake shoes							
2.9 S AWD 3.0 AWD 3.0 E-Hybrid AWD 4.0 GTS AWD 4.0 Turbo AWD 4.0 Turbo GT AWD	324 250 250 - 339 338 404 471	01/19→ 01/19→ 01/19→ 08/20→ 01/19→ 06/21→				**03.0137-9700.2**	**669700**

	kW				! #			
PORSCHE - CAYENNE Coupe (9YB) 01/19→								
Accessory Kit, parking brake shoes								
4.0 Turbo S E-Hybrid AWD	500	10/19→				03.0137-9700.2	669700	
PORSCHE - CAYMAN (981) 03/13→								
Accessory Kit, parking brake shoes								
2.7	155 - 202	03/13→				03.0137-9700.2	669700	
3.8 GT4	283	01/15→						
GTS 3.4	250	02/14→						
S 3.4	239	03/13→						
PORSCHE - PANAMERA (971) 05/16→								
Accessory Kit, parking brake shoes								
2.9	243	04/19→	➡			03.0137-9700.2	669700	
2.9 4	243	05/16→						
2.9 4 E-Hybrid	243 - 340	05/16→						
2.9 4S	324	05/16→						
2.9 4S E-Hybrid	324 - 412	08/20→						
3.0	243	05/16→						
3.0 4	243	05/16→						
4.0 GTS	338 - 353	01/18→						
4.0 S 4 Diesel	310	05/16→						
4.0 Turbo	404	05/16→						
4.0 Turbo S	463	08/20→						
4.0 Turbo S E-Hybrid	404 - 515	05/17→						
PORSCHE - PANAMERA Sport Turismo (971) 05/17→								
Accessory Kit, parking brake shoes								
2.9 4	243	05/17→	➡			03.0137-9700.2	669700	
2.9 4 E-Hybrid	243 - 340	05/17→						
2.9 4S	324	05/17→						
2.9 4S E-Hybrid	324 - 412	08/20→						
3.0 4	243	05/17→						
4.0 GTS	338 - 353	01/18→						
4.0 S 4 Diesel	310	05/17→						
4.0 Turbo	404	05/17→						
4.0 Turbo S	463	08/20→						
4.0 Turbo S E-Hybrid	404 - 515	05/17→						
PORSCHE - TAYCAN (Y1A, Y1B) 05/19→								
Brake Hose								
4S	390	05/19→	⬅		2	24.5118-0688.3	331419	L= 718
4S Performance	420	05/19→						
Electric	300	06/20→	➡		2	24.5170-0285.3	331554	L= 285
Turbo	500	05/19→						
Turbo S	560	05/19→						
Accessory Kit, parking brake shoes								
4S	390	05/19→				03.0137-9700.2	669700	
4S Performance	420	05/19→						
Electric	300	06/20→						
Turbo	500	05/19→						
Turbo S	560	05/19→						
PORSCHE - TAYCAN Cross Turismo (Y1B) 05/20→								
Brake Hose								
4	350	05/20→	⬅		2	24.5118-0688.3	331419	L= 718
4S	420	05/20→						
Turbo	500	05/20→	➡		2	24.5170-0285.3	331554	L= 285
Turbo S	560	05/20→						
Accessory Kit, parking brake shoes								
4	350	05/20→				03.0137-9700.2	669700	
4S	420	05/20→						
Turbo	500	05/20→						
Turbo S	560	05/20→						

© 2022 Continental Aftermarket & Services GmbH

	kW				! #			
RENAULT - ARKANA I (LCM_) 08/19→								
Spring, brake caliper								
1.3 TCe 140 EDC 1.3 TCe 160 EDC	103 116	09/20→ 03/21→	←		2	**11.8116-0356.1**	**390586**	ATE
Guide Bolt, brake caliper								
1.3 TCe 140 EDC 1.3 TCe 160 EDC	103 116	09/20→ 03/21→	←			**11.8171-0008.1**	**990049**	ATE
Brake Pad Set, disc brake								
1.3 TCe 140 EDC 1.3 TCe 150 1.3 TCe 150 4x4 1.3 TCe 160 EDC 1.6 1.6 4x4	103 110 110 116 84 84	09/20→ 08/19→ 08/19→ 03/21→ 08/19→ 08/19→	←			**13.0460-7266.2** **13.0470-7266.2**	**607266** **LD7266**	ATE 24538 17,9 - WE / - WK ATE 24538 17,9 - WE / - WK Ceramic
1.5 E-TECH 145 1.5 E-TECH Hybrid 145	69 105	09/20→ 03/21→	←			**13.0460-5688.2**	**605688**	AKE - WE / - WK
Wheel Brake Cylinder								
1.3 TCe 150 1.6	110 84	08/19→ 08/19→	→		2	**24.3222-1729.3**	**020526**	ALU
Brake Shoe Set								
1.3 TCe 150 1.6	110 84	08/19→ 08/19→	→			**03.0137-0496.2**	**650496**	BDX Ø 228 Width [mm] 42 + HEB
RENAULT - CAPTUR I (J5_, H5_) 06/13→								
Spring, brake caliper								
1.2 T 1.2 TCe 1.2 TCe 120 1.3 TCe 130 1.3 TCe 150 1.5 dCi 1.5 dCi 110 1.5 dCi 90 1.6	83 - 85 97 87 - 88 96 110 63 81 66 84	06/13→ 02/18→ 06/13→ 03/18→ 03/18→ 06/13→ 01/15→ 06/13→ 02/18→	←		2	**11.8116-0356.1**	**390586**	ATE
Brake Pad Set, disc brake								
1.2 T 1.2 TCe 1.2 TCe 120 1.3 TCe 130 1.3 TCe 150 1.5 dCi 1.5 dCi 110 1.5 dCi 90 1.6	83 - 85 97 87 - 88 96 110 63 81 66 84	06/13→ 02/18→ 06/13→ 03/18→ 03/18→ 06/13→ 01/15→ 06/13→ 02/18→	←			**13.0460-7266.2** **13.0470-7266.2**	**607266** **LD7266**	ATE 24538 17,9 - WE / - WK ATE 24538 17,9 - WE / - WK Ceramic
Wheel Brake Cylinder								
0.9 TCe 90	66	06/13→	→	09/14→	2	**24.3222-1729.3**	**020526**	ALU
1.2 T 1.2 TCe 1.2 TCe 120 1.3 TCe 130 1.3 TCe 150 1.5 dCi 1.5 dCi 110 1.5 dCi 90 1.6	83 - 85 97 87 - 88 96 110 63 81 66 84	06/13→ 02/18→ 06/13→ 03/18→ 03/18→ 06/13→ 01/15→ 06/13→ 02/18→	→		2	**24.3222-1729.3**	**020526**	ALU
Accessory Kit, brake shoes								
0.9 TCe 90 1.2 T 1.2 TCe 1.2 TCe 120 1.3 TCe 130 1.3 TCe 150 1.5 dCi 1.5 dCi 110 1.5 dCi 90 1.6	66 83 - 85 97 87 - 88 96 110 63 81 66 84	06/13→ 06/13→ 02/18→ 06/13→ 03/18→ 03/18→ 06/13→ 01/15→ 06/13→ 02/18→	→			**03.0137-9228.2**	**669228**	BDX

	kW				! #			
RENAULT - CAPTUR I (J5_, H5_) 06/13→								
Brake Shoe Set								
0.9 TCe 90	66	06/13→	➡			**03.0137-0496.2**	**650496**	BDX Ø 228 Width [mm] 42 + HEB
			➡	09/14→		**03.0520-7222.3**	**697222**	Ø 228 Width [mm] 42 + RZ / + Zub TopKit
1.2 T 1.2 TCe 1.2 TCe 120 1.3 TCe 130 1.3 TCe 150 1.5 dCi 1.5 dCi 110 1.5 dCi 90 1.6	83 - 85 97 87 - 88 96 110 63 81 66 84	06/13→ 02/18→ 06/13→ 03/18→ 03/18→ 06/13→ 01/15→ 06/13→ 02/18→	➡			**03.0137-0496.2** **03.0520-7222.3**	**650496** **697222**	BDX Ø 228 Width [mm] 42 + HEB Ø 228 Width [mm] 42 + RZ / + Zub TopKit
RENAULT - CAPTUR II 01/20→								
Spring, brake caliper								
Blue dCi 115 Blue dCi 95 LPG TCe 100 TCe 130 TCe 140 TCe 155 TCe 90	85 70 74 74 96 103 113 67	01/20→ 01/20→ 01/20→ 01/20→ 01/20→ 01/20→ 01/20→ 09/20→	⬅		2	**11.8116-0356.1**	**390586**	ATE
Guide Bolt, brake caliper								
Blue dCi 115 Blue dCi 95 LPG TCe 100 TCe 130 TCe 140 TCe 155 TCe 90	85 70 74 74 96 103 113 67	01/20→ 01/20→ 01/20→ 01/20→ 01/20→ 01/20→ 01/20→ 09/20→	⬅			**11.8171-0008.1**	**990049**	ATE
Brake Pad Set, disc brake								
Blue dCi 115 Blue dCi 95 LPG TCe 100 TCe 130 TCe 140 TCe 155 TCe 90	85 70 74 74 96 103 113 67	01/20→ 01/20→ 01/20→ 01/20→ 01/20→ 01/20→ 01/20→ 09/20→	⬅			**13.0460-7266.2** **13.0470-7266.2**	**607266** **LD7266**	ATE 24538 17,9 - WE / - WK ATE 24538 17,9 - WE / - WK Ceramic
E-TECH 160	68 - 116	05/20→	⬅			**13.0460-5688.2**	**605688**	AKE - WE / - WK
RENAULT - CLIO IV (BH_) 11/12→								
Guide Bolt, brake caliper								
0.9 TCe 75 0.9 TCe 90 0.9 TCe 90 LPG 1.2 16V 1.2 LPG 1.2 LPG 16V 1.5 dCi 75	56 66 66 54 - 55 53 54 55	05/18→ 11/12→ 06/16→ 11/12→ 01/14→ 11/12→06/15 11/12→	⬅	Rim Size [in]: 15 / 16		**11.8171-0008.1**	**990049**	ATE
1.5 dCi 1.5 dCi 90	62 - 63 66	11/12→ 11/12→	⬅	Manual Transmission; Rim Size [in]: 15 / 16		**11.8171-0008.1**	**990049**	ATE
1.6 RS 1.6 RS Trophy	147 162	03/13→ 03/15→	⬅			**11.8171-0008.1**	**990049**	ATE
Accessory Kit, brake shoes								
0.9 TCe 75 0.9 TCe 90 0.9 TCe 90 LPG 1.2 16V 1.2 LPG 1.2 LPG 16V 1.5 dCi 75	56 66 66 54 - 55 53 54 55	05/18→ 11/12→ 06/16→ 11/12→ 01/14→ 11/12→06/15 11/12→	➡	Rim Size [in]: 17		**03.0137-9228.2**	**669228**	BDX
1.2 TCe 120 1.5 dCi 110	87 - 88 81	03/13→ 06/16→	➡			**03.0137-9228.2**	**669228**	BDX
1.5 dCi 1.5 dCi 90	62 - 63 66	11/12→ 11/12→	➡	Automatic Transmission; Rim Size [in]: 17		**03.0137-9228.2**	**669228**	BDX

© 2022 Continental Aftermarket & Services GmbH

	kW				! #			
RENAULT - CLIO IV (BH_) 11/12→								
Brake Shoe Set								
0.9 TCe 75 0.9 TCe 90 0.9 TCe 90 LPG 1.2 16V 1.2 LPG 1.2 LPG 16V 1.5 dCi 75	56 66 66 54 - 55 53 54 55	05/18→ 11/12→ 06/16→ 11/12→ 01/14→ 11/12→06/15 11/12→	➡	Rim Size [in]: 17		**03.0137-0496.2**	**650496**	BDX Ø 228 Width [mm] 42 + HEB
1.2 TCe 120 1.5 dCi 110	87 - 88 81	03/13→ 06/16→	➡			**03.0137-0496.2**	**650496**	BDX Ø 228 Width [mm] 42 + HEB
1.5 dCi 1.5 dCi 90	62 - 63 66	11/12→ 11/12→	➡	Automatic Transmission; Rim Size [in]: 17		**03.0137-0496.2**	**650496**	BDX Ø 228 Width [mm] 42 + HEB
RENAULT - CLIO IV Grandtour (KH_) 01/13→								
Accessory Kit, brake shoes								
0.9 TCe 90 1.5 dCi 75 1.5 dCi 90	66 55 66	01/14→ 01/14→ 01/14→	➡			**03.0137-9228.2**	**669228**	BDX
Brake Shoe Set								
0.9 TCe 90 1.5 dCi 75 1.5 dCi 90	66 55 66	01/14→ 01/14→ 01/14→	➡			**03.0137-0496.2**	**650496**	BDX Ø 228 Width [mm] 42 + HEB
RENAULT - CLIO IV Grandtour (KH_) 11/12→								
Accessory Kit, brake shoes								
0.9 TCe 75 0.9 TCe 90 1.2 16V 1.2 TCe 120 1.5 dCi 110 1.5 dCi 75 1.5 dCi 90	56 66 54 87 - 88 81 55 66	08/18→ 01/13→ 01/13→ 03/13→ 06/16→ 01/13→ 11/12→	➡			**03.0137-9228.2**	**669228**	BDX
Brake Shoe Set								
0.9 TCe 75 0.9 TCe 90 1.2 16V 1.2 TCe 120 1.5 dCi 110 1.5 dCi 75 1.5 dCi 90	56 66 54 87 - 88 81 55 66	08/18→ 01/13→ 01/13→ 03/13→ 06/16→ 01/13→ 11/12→	➡			**03.0137-0496.2**	**650496**	BDX Ø 228 Width [mm] 42 + HEB
RENAULT - CLIO IV Hatchback Van (BH_) 01/14→								
Guide Bolt, brake caliper								
0.9 TCe 90 0.9 TCe 90 LPG 1.2 16V 1.2 16V LPG 1.5 dCi 75	66 66 54 - 55 53 55	01/14→ 08/15→ 01/14→ 01/14→ 01/14→	⬅	Rim Size [in]: 15 / 16		**11.8171-0008.1**	**990049**	ATE
1.5 dCi 90	66	01/14→	⬅	Manual Transmission; Rim Size [in]: 15 / 16		**11.8171-0008.1**	**990049**	ATE
Accessory Kit, brake shoes								
0.9 TCe 90 0.9 TCe 90 LPG 1.2 16V 1.2 16V LPG 1.5 dCi 75	66 66 54 - 55 53 55	01/14→ 08/15→ 01/14→ 01/14→ 01/14→	➡	Rim Size [in]: 17		**03.0137-9228.2**	**669228**	BDX
1.5 dCi 90	66	01/14→	➡	Automatic Transmission; Rim Size [in]: 17		**03.0137-9228.2**	**669228**	BDX
Brake Shoe Set								
0.9 TCe 90 0.9 TCe 90 LPG 1.2 16V 1.2 16V LPG 1.5 dCi 75	66 66 54 - 55 53 55	01/14→ 08/15→ 01/14→ 01/14→ 01/14→	➡	Rim Size [in]: 17		**03.0137-0496.2**	**650496**	BDX Ø 228 Width [mm] 42 + HEB
1.5 dCi 90	66	01/14→	➡	Automatic Transmission; Rim Size [in]: 17		**03.0137-0496.2**	**650496**	BDX Ø 228 Width [mm] 42 + HEB

	kW				! #			
RENAULT - CLIO V (B7_) 06/19→								
Spring, brake caliper								
1.0 LPG 1.0 TCe 100 1.5 Blue dCi 115 1.5 Blue dCi 85 TCe 90	74 74 85 63 67	06/19→ 06/19→ 06/19→ 06/19→ 08/20→	←	for brake disc diameter [mm]: 280	2	**11.8116-0356.1**	**390586**	ATE
1.3 TCe 130 1.6 E-TECH 140	96 67	06/19→ 03/20→	←		2	**11.8116-0356.1**	**390586**	ATE
Guide Bolt, brake caliper								
1.0 LPG 1.0 TCe 100 1.5 Blue dCi 115 1.5 Blue dCi 85 TCe 90	74 74 85 63 67	06/19→ 06/19→ 06/19→ 06/19→ 08/20→	←	for brake disc diameter [mm]: 280		**11.8171-0008.1**	**990049**	ATE
1.3 TCe 130 1.6 E-TECH 140	96 67	06/19→ 03/20→	←			**11.8171-0008.1**	**990049**	ATE
Brake Pad Set, disc brake								
1.0 LPG 1.0 TCe 100 1.5 Blue dCi 115 1.5 Blue dCi 85 TCe 90	74 74 85 63 67	06/19→ 06/19→ 06/19→ 06/19→ 08/20→	←	for brake disc diameter [mm]: 280		**13.0460-7266.2** **13.0470-7266.2**	**607266** **LD7266**	ATE 24538 17,9 - WE / - WK ATE 24538 17,9 - WE / - WK Ceramic
1.3 TCe 130 1.6 E-TECH 140	96 67	06/19→ 03/20→	←			**13.0460-7266.2** **13.0470-7266.2**	**607266** **LD7266**	ATE 24538 17,9 - WE / - WK ATE 24538 17,9 - WE / - WK Ceramic
RENAULT - DOKKER 12/13→								
Spring, brake caliper								
1.5 dCi 1.6	66 62	12/13→ 12/13→	←	+ ESP	2	**11.8116-0356.1**	**390586**	ATE
Brake Pad Set, disc brake								
1.5 dCi 1.6	66 62	12/13→ 12/13→	←	+ ESP		**13.0460-7266.2** **13.0470-7266.2**	**607266** **LD7266**	ATE 24538 17,9 - WE / - WK ATE 24538 17,9 - WE / - WK Ceramic
Sensor, wheel speed								
1.5 dCi 1.6	66 62	12/13→ 12/13→	←		2	**24.0711-5369.3**	**360378**	L= 619
Wheel Brake Cylinder								
1.5 dCi 1.6	66 62	12/13→ 12/13→	→			**24.3222-1729.3**	**020526**	ALU
Accessory Kit, brake shoes								
1.5 dCi 1.6	66 62	12/13→ 12/13→	→			**03.0137-9228.2**	**669228**	BDX
Brake Shoe Set								
1.5 dCi 1.6	66 62	12/13→ 12/13→	→			**03.0137-0496.2** **03.0520-7222.3**	**650496** **697222**	BDX Ø 228 Width [mm] 42 + HEB Ø 228 Width [mm] 42 + RZ / + Zub TopKit
RENAULT - DUSTER (HM_) 10/17→								
Spring, brake caliper								
1.5 dCi 110 1.5 dCi 110 4x4	80 80	07/19→ 07/19→	←		2	**11.8116-0356.1**	**390586**	ATE
Brake Pad Set, disc brake								
1.5 dCi 110 1.5 dCi 110 4x4	80 80	07/19→ 07/19→	←			**13.0460-7266.2** **13.0470-7266.2**	**607266** **LD7266**	ATE 24538 17,9 - WE / - WK ATE 24538 17,9 - WE / - WK Ceramic
Wheel Brake Cylinder								
1.5 dCi 110	80	07/19→	→		2	**24.3222-1729.3**	**020526**	ALU
Accessory Kit, brake shoes								
1.5 dCi 110	80	07/19→	→			**03.0137-9228.2**	**669228**	BDX
Brake Shoe Set								
1.5 dCi 110	80	07/19→	→			**03.0137-0496.2**	**650496**	BDX Ø 228 Width [mm] 42 + HEB

© 2022 Continental Aftermarket & Services GmbH

	kW				! #			
RENAULT - DUSTER (HM_) 10/17→								
Brake Shoe Set								
1.5 dCi 110	80	07/19→	➡			**03.0520-7222.3**	**697222**	Ø 228 Width [mm] 42 + RZ / + Zub TopKit
RENAULT - DUSTER (HS_) 01/11→								
Spring, brake caliper								
1.5 dCi 1.5 dCi 4x4 2.0	63 80 98 - 105	02/12→ 09/13→01/18 10/11→	⬅	+ ABS	2	**11.8116-0356.1**	**390586**	ATE
1.5 dCi 4x4 2.0 4x4	66 99 - 105	06/11→ 10/11→	⬅		2	**11.8116-0356.1**	**390586**	ATE
1.6 16V 1.6 16V 4x4	75 - 84 75 - 84	02/12→ 06/11→	⬅	+ ESP	2	**11.8116-0356.1**	**390586**	ATE
Brake Pad Set, disc brake								
1.5 dCi 1.5 dCi 4x4 2.0	63 80 98 - 105	02/12→ 09/13→01/18 10/11→	⬅	+ ABS		**13.0460-7266.2** **13.0470-7266.2**	**607266** **LD7266**	ATE 24538 17,9 - WE / - WK ATE 24538 17,9 - WE / - WK Ceramic
1.5 dCi 4x4 2.0 4x4	66 99 - 105	06/11→ 10/11→	⬅			**13.0460-7266.2** **13.0470-7266.2**	**607266** **LD7266**	ATE 24538 17,9 - WE / - WK ATE 24538 17,9 - WE / - WK Ceramic
1.6 16V 1.6 16V 4x4	75 - 84 75 - 84	02/12→ 06/11→	⬅	+ ESP		**13.0460-7266.2** **13.0470-7266.2**	**607266** **LD7266**	ATE 24538 17,9 - WE / - WK ATE 24538 17,9 - WE / - WK Ceramic
Brake Hose								
1.5 dCi 1.6 16V 1.6 16V 4x4	63 75 - 84 75 - 84	02/12→ 02/12→ 06/11→	⬅	- ESP	2	**24.5111-0450.3**	**331557**	L= 450
2.0	98 - 105	10/11→	⬅	- ABS	2	**24.5111-0450.3**	**331557**	L= 450
Accessory Kit, brake shoes								
1.5 dCi 1.6 16V 2.0	63 75 - 84 98 - 105	02/12→ 02/12→ 10/11→	➡			**03.0137-9228.2**	**669228**	BDX
Brake Shoe Set								
1.5 dCi 1.6 16V 2.0	63 75 - 84 98 - 105	02/12→ 02/12→ 10/11→	➡			**03.0137-0496.2**	**650496**	BDX Ø 228 Width [mm] 42 + HEB
RENAULT - ESPACE IV (JK0/1_) 11/02→								
Guide Bolt, brake caliper								
1.9 dCi 2.0 2.0 dCi 2.0 Turbo 2.2 dCi 3.0 dCi 3.5 V6	85 - 88 98 - 125 96 - 127 120 102 - 110 120 - 133 177	11/02→ 11/02→ 01/06→ 11/02→ 11/02→ 11/02→ 11/02→			2	**11.8171-0008.1**	**990049**	ATE
RENAULT - ESPACE V (JR_) 02/15→								
Brake Pad Set, disc brake								
1.6 dCi 130 1.6 dCi 160 1.6 TCe 200 1.8 TCe 225	96 118 147 165	06/15→ 06/15→ 02/15→ 10/16→	⬅	03/17→		**13.0460-5688.2**	**605688**	AKE - WE / - WK
2.0 Blue dCi 160 2.0 Blue dCi 190 2.0 Blue dCi 200	118 139 147	10/18→ 01/21→ 10/18→	⬅			**13.0460-5688.2**	**605688**	AKE - WE / - WK

	kW				! #			
RENAULT - EXPRESS Box Body/MPV 05/21→								
Spring, brake caliper								
1.3 TCe 100 1.5 Blue dCi 75 1.5 Blue dCi 95	75 55 70	05/21→ 05/21→ 05/21→	←		2	**11.8116-0356.1**	**390586**	ATE
Brake Pad Set, disc brake								
1.3 TCe 100 1.5 Blue dCi 75 1.5 Blue dCi 95	75 55 70	05/21→ 05/21→ 05/21→	←			**13.0460-7266.2** **13.0470-7266.2**	**607266** **LD7266**	ATE 24538 17,9 - WE / - WK ATE 24538 17,9 - WE / - WK Ceramic
Sensor, wheel speed								
1.3 TCe 100 1.5 Blue dCi 75 1.5 Blue dCi 95	75 55 70	05/21→ 05/21→ 05/21→	←		2	**24.0711-5369.3**	**360378**	L= 619
Wheel Brake Cylinder								
1.3 TCe 100 1.5 Blue dCi 75 1.5 Blue dCi 95	75 55 70	05/21→ 05/21→ 05/21→	→		2	**24.3222-1729.3**	**020526**	ALU
Accessory Kit, brake shoes								
1.3 TCe 100 1.5 Blue dCi 75 1.5 Blue dCi 95	75 55 70	05/21→ 05/21→ 05/21→	→			**03.0137-9228.2**	**669228**	BDX
Brake Shoe Set								
1.3 TCe 100 1.5 Blue dCi 75 1.5 Blue dCi 95	75 55 70	05/21→ 05/21→ 05/21→	→			**03.0137-0496.2** **03.0520-7222.3**	**650496** **697222**	BDX Ø 228 Width [mm] 42 + HEB Ø 228 Width [mm] 42 + RZ / + Zub TopKit
RENAULT - FLUENCE (L3_) 02/10→								
Spring, brake caliper								
1.5 dCi 1.6 1.6 16V 1.6 dCi 1.6 Flex 1.6 LPG 16V 2.0 2.0 16V Z.E.	63 - 81 86 78 - 82 96 85 81 105 101 - 103 70	02/10→ 01/13→ 02/10→ 07/14→ 01/12→11/14 01/12→ 05/14→ 02/10→ 02/12→	←		2	**11.8116-0356.1**	**390586**	ATE
Brake Pad Set, disc brake								
1.5 dCi 1.6 1.6 16V 1.6 dCi 1.6 Flex 1.6 LPG 16V 2.0 2.0 16V Z.E.	63 - 81 86 78 - 82 96 85 81 105 101 - 103 70	02/10→ 01/13→ 02/10→ 07/14→ 01/12→11/14 01/12→ 05/14→ 02/10→ 02/12→	←			**13.0460-7266.2** **13.0470-7266.2**	**607266** **LD7266**	ATE 24538 17,9 - WE / - WK ATE 24538 17,9 - WE / - WK Ceramic
RENAULT - GRAND SCÉNIC II (JM0/1_) 04/04→06/09								
Brake Caliper								
1.5 dCi 1.6 1.6 Flex	76 77 - 82 82	06/06→11/08 06/06→11/08 06/06→06/09	←	⊞		**24.3541-1879.5**	**241429**	ATE without holder
1.5 dCi 1.6 1.9 dCi 2.0 2.0 dCi	74 83 81 - 96 99 - 120 110	04/04→11/08 04/04→08/06 04/04→01/09 04/04→06/09 09/05→11/08	←	11/05→; ⊞		**24.3541-1879.5**	**241429**	ATE without holder
1.5 dCi	78	05/05→01/09	←	06/06→; ⊞		**24.3541-1879.5**	**241429**	ATE without holder
Guide Bolt, brake caliper								
1.5 dCi 1.6	76 77 - 82	06/06→11/08 06/06→11/08			2	**11.8171-0008.1**	**990049**	ATE

© 2022 Continental Aftermarket & Services GmbH

	kW				! #			
RENAULT - GRAND SCÉNIC II (JM0/1_) 04/04→06/09								
Guide Bolt, brake caliper								
1.6 Flex	82	06/06→06/09			2	**11.8171-0008.1**	**990049**	ATE
1.5 dCi	74	04/04→11/08		→ 09/05	2	**11.8171-0008.1**	**990049**	ATE
1.6 1.9 dCi 2.0 dCi	83 81 - 96 110	04/04→08/06 04/04→01/09 09/05→11/08		10/05→	2	**11.8171-0008.1**	**990049**	ATE
1.5 dCi	78	05/05→01/09		06/06→	2	**11.8171-0008.1**	**990049**	ATE
2.0	99	04/04→06/09		10/05→ 03/09	2	**11.8171-0008.1**	**990049**	ATE
				→ 09/05	2	**11.8171-0008.1**	**990049**	ATE
2.0	120	04/04→06/09		10/05→ 03/09	2	**11.8171-0008.1**	**990049**	ATE
RENAULT - GRAND SCÉNIC III (JZ0/1_) 02/09→								
Spring, brake caliper								
1.5 dCi	63	04/09→	←		2	**11.8116-0356.1**	**390586**	ATE
Brake Pad Set, disc brake								
1.5 dCi	63	04/09→	←			**13.0460-7266.2** **13.0470-7266.2**	**607266** **LD7266**	ATE 24538 17,9 - WE / - WK ATE 24538 17,9 - WE / - WK Ceramic
RENAULT - GRAND SCÉNIC IV (R9_) 09/16→								
Brake Pad Set, disc brake								
1.2 TCe 115 1.2 TCe 130 1.5 dCi 110 1.6 dCi 130 1.6 dCi 160	85 96 81 96 118	09/16→ 09/16→ 09/16→ 09/16→ 09/16→	←	03/17→		**13.0460-5688.2**	**605688**	AKE - WE / - WK
1.3 TCe 115 1.3 TCe 140 1.3 TCe 160 1.5 dCi 110 Hybrid Assist 1.7 Blue dCi 120 1.7 Blue dCi 150	85 103 117 - 120 81 88 110	01/18→ 01/18→ 01/18→ 04/17→ 08/18→ 08/18→	←			**13.0460-5688.2**	**605688**	AKE - WE / - WK
RENAULT - KADJAR (HA_, HL_) 06/15→								
Brake Caliper								
1.2 TCe 130 1.3 TCe 140	96 103	06/15→ 08/18→	←			**24.3571-1799.5**	**241385**	without holder
1.3 TCe 160 1.5 BLUE dCi 115 1.5 dCi 110 1.6 dCi 130 1.6 dCi 130 4x4 1.6 TCe 165 1.7 Blue dCi 150 1.7 Blue dCi 150 4WD	116 - 117 85 81 96 96 120 110 110	08/18→ 08/18→ 06/15→ 06/15→ 06/15→ 11/16→ 08/18→ 08/18→	←			**24.3571-1800.5**	**241386**	without holder
RENAULT - KANGOO / GRAND KANGOO II (KW0/1_) 02/08→								
Wheel Brake Cylinder								
1.2 TCe 115 1.5 dCi 1.5 dCi 105 1.5 dCi 110 1.5 dCi 115 1.5 dCi 70 1.5 dCi 75 1.5 dCi 80 1.5 dCi 85 1.5 dCi 90 1.5 dCi 95 1.6 1.6 16V 1.6 16V FLEX 1.6 16V LPG	84 78 76 80 - 81 85 50 55 59 63 66 - 67 70 64 78 78 78	07/13→ 02/08→ 02/08→ 09/10→ 03/19→ 02/08→ 11/12→ 03/19→ 02/08→ 06/08→ 03/19→ 02/08→ 02/08→ 02/08→ 12/08→	→		2	**24.3222-1729.3**	**020526**	ALU
Accessory Kit, brake shoes								
1.2 TCe 115 1.5 dCi 1.5 dCi 105 1.5 dCi 110	84 78 76 80 - 81	07/13→ 02/08→ 02/08→ 09/10→	→			**03.0137-9228.2**	**669228**	BDX

	kW				! #			
RENAULT - KANGOO / GRAND KANGOO II (KW0/1_) 02/08→								
Accessory Kit, brake shoes								
1.5 dCi 115 1.5 dCi 70 1.5 dCi 75 1.5 dCi 80 1.5 dCi 85 1.5 dCi 90 1.5 dCi 95 1.6 1.6 16V 1.6 16V FLEX 1.6 16V LPG	85 50 55 59 63 66 - 67 70 64 78 78 78	03/19→ 02/08→ 11/12→ 03/19→ 02/08→ 06/08→ 03/19→ 02/08→ 02/08→ 02/08→ 12/08→				**03.0137-9228.2**	**669228**	BDX
Brake Shoe Set								
1.2 TCe 115 1.5 dCi 1.5 dCi 105 1.5 dCi 110 1.5 dCi 115 1.5 dCi 70 1.5 dCi 75 1.5 dCi 80 1.5 dCi 85 1.5 dCi 90 1.5 dCi 95 1.6 1.6 16V 1.6 16V FLEX 1.6 16V LPG	84 78 76 80 - 81 85 50 55 59 63 66 - 67 70 64 78 78 78	07/13→ 02/08→ 02/08→ 09/10→ 03/19→ 02/08→ 11/12→ 03/19→ 02/08→ 06/08→ 03/19→ 02/08→ 02/08→ 02/08→ 12/08→				**03.0137-0496.2** **03.0520-7222.3**	**650496** **697222**	BDX Ø 228 Width [mm] 42 + HEB Ø 228 Width [mm] 42 + RZ / + Zub TopKit
RENAULT - KANGOO (KC0/1_) 08/97→								
Brake Caliper								
1.6 16V 4x4 1.9 dCi 4x4	70 59 - 62	10/01→ 10/01→		→ 12/07; ◪ → 12/07; ◪		**24.3382-1705.5** **24.3382-1706.5**	**241321** **241322**	BOS without holder BOS without holder
Accessory Kit, brake shoes								
1.0 1.0 RN 1.6 Elect'road RE	50 43 66 22	01/02→01/07 01/02→01/07 09/99→06/01 01/02→12/04				**03.0137-9228.2**	**669228**	BDX
1.2	43	08/97→		03/98→ 12/07; for vehicles with heavy duty suspension		**03.0137-9228.2**	**669228**	BDX
				03/98→ 12/07		**03.0137-9228.2**	**669228**	BDX
1.2 16V	55	06/01→		→ 12/07; for vehicles with heavy duty suspension		**03.0137-9228.2**	**669228**	BDX
				→ 12/07		**03.0137-9228.2**	**669228**	BDX
1.4 D 55 1.9	55 40	08/97→ 08/97→		03/98→ 12/07; for vehicles with heavy duty suspension		**03.0137-9228.2**	**669228**	BDX
1.5 dCi 1.6 16V 1.9 dTi	42 - 62 70 59	12/01→ 06/01→ 02/00→		→ 12/07; for vehicles with heavy duty suspension		**03.0137-9228.2**	**669228**	BDX
1.9 RXED	48	09/99→06/01		for vehicles with heavy duty suspension		**03.0137-9228.2**	**669228**	BDX
D 65 1.9	47	08/97→06/01		03/98→; for vehicles with heavy duty suspension		**03.0137-9228.2**	**669228**	BDX
RENAULT - KANGOO III Box Body/MPV 06/21→								
Spring, brake caliper								
1.3 TCe 100 1.3 TCe 130 1.5 Blue dCi 115 1.5 Blue dCi 75 1.5 Blue dCi 95	75 96 85 55 70	06/21→ 06/21→ 06/21→ 06/21→ 06/21→			2	**11.8116-0356.1**	**390586**	ATE
Guide Bolt, brake caliper								
1.3 TCe 100 1.3 TCe 130 1.5 Blue dCi 115 1.5 Blue dCi 75 1.5 Blue dCi 95	75 96 85 55 70	06/21→ 06/21→ 06/21→ 06/21→ 06/21→				**11.8171-0008.1**	**990049**	ATE
Brake Pad Set, disc brake								
1.3 TCe 100 1.3 TCe 130 1.5 Blue dCi 115	75 96 85	06/21→ 06/21→ 06/21→				**13.0460-7266.2**	**607266**	ATE 24538 17,9 - WE / - WK

© 2022 Continental Aftermarket & Services GmbH

	kW				! #			
RENAULT - KANGOO III Box Body/MPV 06/21→								
Brake Pad Set, disc brake								
1.5 Blue dCi 75 1.5 Blue dCi 95	55 70	06/21→ 06/21→	←			**13.0470-7266.2**	**LD7266**	ATE 24538 17,9 - WE / - WK Ceramic
RENAULT - KANGOO III MPV 07/21→								
Spring, brake caliper								
Blue dCi 75 Blue dCi 95 TCe 100 TCe 130	55 70 75 96	07/21→ 07/21→ 07/21→ 07/21→	←		2	**11.8116-0356.1**	**390586**	ATE
Guide Bolt, brake caliper								
Blue dCi 75 Blue dCi 95 TCe 100 TCe 130	55 70 75 96	07/21→ 07/21→ 07/21→ 07/21→	←			**11.8171-0008.1**	**990049**	ATE
Brake Pad Set, disc brake								
Blue dCi 75 Blue dCi 95 TCe 100 TCe 130	55 70 75 96	07/21→ 07/21→ 07/21→ 07/21→	←			**13.0460-7266.2** **13.0470-7266.2**	**607266** **LD7266**	ATE 24538 17,9 - WE / - WK ATE 24538 17,9 - WE / - WK Ceramic
RENAULT - KANGOO BE BOP (KW0/1_) 02/09→								
Wheel Brake Cylinder								
1.5 dCi 1.5 dCi 75 1.6	66 - 80 55 78	02/09→ 09/10→ 02/09→12/12	→	Rim Size [in]: 14; → 12/10	2	**24.3222-1729.3**	**020526**	ALU
Accessory Kit, brake shoes								
1.5 dCi 1.5 dCi 75 1.6	66 - 80 55 78	02/09→ 09/10→ 02/09→12/12	→	Rim Size [in]: 14; → 12/10		**03.0137-9228.2**	**669228**	BDX
Brake Shoe Set								
1.5 dCi 1.5 dCi 75 1.6	66 - 80 55 78	02/09→ 09/10→ 02/09→12/12	→	Rim Size [in]: 14; → 12/10		**03.0137-0496.2** **03.0520-7222.3**	**650496** **697222**	BDX Ø 228 Width [mm] 42 + HEB Ø 228 Width [mm] 42 + RZ / + Zub TopKit
RENAULT - KANGOO Express (FC0/1_) 08/97→								
Accessory Kit, brake shoes								
1.0	43	01/02→01/07	→			**03.0137-9228.2**	**669228**	BDX
1.0	50	01/02→01/07	→	07/03→; for vehicles with heavy duty suspension		**03.0137-9228.2**	**669228**	BDX
1.2 1.4 D 55 1.9 D 65 1.9	43 55 40 47	08/97→ 08/97→06/08 08/97→ 08/97→	→	03/98→ 12/07; for vehicles with heavy duty suspension		**03.0137-9228.2**	**669228**	BDX
1.2 1.2 BiFuel 1.6 1.9 D	44 43 66 48	07/98→07/01 07/98→07/01 09/99→06/01 09/99→06/03	→	for vehicles with heavy duty suspension		**03.0137-9228.2**	**669228**	BDX
1.2 16V 1.5 dCi 1.6 16V 1.6 16V 4x4 1.6 16V bivalent 1.6 Flex 1.9 dCi 1.9 dTi	55 42 - 62 70 70 60 72 62 59	10/01→ 12/01→ 10/01→ 10/01→ 06/05→ 03/07→12/18 07/03→ 02/00→	→	→ 12/07; for vehicles with heavy duty suspension		**03.0137-9228.2**	**669228**	BDX
RENAULT - KANGOO Express (FW0/1_) 02/08→								
Wheel Brake Cylinder								
1.2 TCe 115 1.5 dCi 105 1.5 dCi 110 1.5 dCi 115 1.5 dCi 70 1.5 dCi 75 1.5 dCi 80 1.5 dCi 85 1.5 dCi 90	84 76 80 - 81 85 50 55 59 63 66 - 67	07/13→ 02/08→ 09/10→ 10/19→ 02/08→ 09/10→ 10/19→ 02/08→ 06/09→	→		2	**24.3222-1729.3**	**020526**	ALU

	kW				! #			
RENAULT - KANGOO Express (FW0/1_) 02/08→								
Wheel Brake Cylinder								
1.5 dCi 95	70	10/19→	➡		2	**24.3222-1729.3**	**020526**	ALU
1.6	64	02/08→						
1.6 16V	78	02/08→						
1.6 16V FLEX	78	02/08→						
1.6 16V LPG	78	02/08→						
Z.E.	44	10/11→						
Accessory Kit, brake shoes								
1.2 TCe 115	84	07/13→	➡			**03.0137-9228.2**	**669228**	BDX
1.5 dCi 105	76	02/08→						
1.5 dCi 110	80 - 81	09/10→						
1.5 dCi 115	85	10/19→						
1.5 dCi 70	50	02/08→						
1.5 dCi 75	55	09/10→						
1.5 dCi 80	59	10/19→						
1.5 dCi 85	63	02/08→						
1.5 dCi 90	66 - 67	06/09→						
1.5 dCi 95	70	10/19→						
1.6	64	02/08→						
1.6 16V	78	02/08→						
1.6 16V FLEX	78	02/08→						
1.6 16V LPG	78	02/08→						
Z.E.	44	10/11→						
Brake Shoe Set								
1.2 TCe 115	84	07/13→	➡			**03.0137-0496.2**	**650496**	BDX Ø 228 Width [mm] 42 + HEB
1.5 dCi 105	76	02/08→				**03.0520-7222.3**	**697222**	Ø 228 Width [mm] 42 + RZ / + Zub TopKit
1.5 dCi 110	80 - 81	09/10→						
1.5 dCi 115	85	10/19→						
1.5 dCi 70	50	02/08→						
1.5 dCi 75	55	09/10→						
1.5 dCi 80	59	10/19→						
1.5 dCi 85	63	02/08→						
1.5 dCi 90	66 - 67	06/09→						
1.5 dCi 95	70	10/19→						
1.6	64	02/08→						
1.6 16V	78	02/08→						
1.6 16V FLEX	78	02/08→						
1.6 16V LPG	78	02/08→						
Z.E.	44	10/11→						
RENAULT - KAPTUR (H5_) 03/16→								
Spring, brake caliper								
2.0 4WD	105	03/16→	⬅		2	**11.8116-0356.1**	**390586**	ATE
Brake Pad Set, disc brake								
2.0 4WD	105	03/16→	⬅			**13.0460-7266.2**	**607266**	ATE 24538 17,9 - WE / - WK
						13.0470-7266.2	**LD7266**	ATE 24538 17,9 - WE / - WK Ceramic
Brake Hose								
1.6	84	03/16→	⬅		2	**24.5111-0450.3**	**331557**	L= 450
Wheel Brake Cylinder								
1.6	84	03/16→	➡		2	**24.3222-1729.3**	**020526**	ALU
Accessory Kit, brake shoes								
1.6	84	03/16→	➡			**03.0137-9228.2**	**669228**	BDX
Brake Shoe Set								
1.6	84	03/16→	➡			**03.0137-0496.2**	**650496**	BDX Ø 228 Width [mm] 42 + HEB
						03.0520-7222.3	**697222**	Ø 228 Width [mm] 42 + RZ / + Zub TopKit
RENAULT - KOLEOS I (HY_) 09/08→								
Brake Caliper								
2.0	103	08/13→	➡			**24.3431-1721.5**	**241425**	without holder
2.0 dCi	110 - 127	09/08→	➡			**24.3431-1722.5**	**241426**	without holder
2.0 dCi 4x4	110 - 130	09/08→						
2.5	126	09/08→						

© 2022 Continental Aftermarket & Services GmbH

	kW				! #			
RENAULT - KOLEOS I (HY_) 09/08→								
Brake Caliper								
2.5 4x4	126	09/08→	➡			**24.3431-1721.5**	**241425**	without holder
			➡			**24.3431-1722.5**	**241426**	without holder
Brake Pad Set, disc brake								
2.0 2.0 dCi 2.0 dCi 4x4 2.5 2.5 4x4	103 110 - 127 110 - 130 126 126	08/13→ 09/08→ 09/08→ 09/08→ 09/08→	⬅			**13.0460-5778.2**	**605778**	SUM 23698 16,8 + WK
RENAULT - KOLEOS II (HC_) 08/16→								
Brake Pad Set, disc brake								
1.7 BLUE dCi 150 2.0 BLUE DCI 185 2.0 BLUE DCI 185 4WD 2.0 BLUE dCi 190 4WD 2.0 dCi 175 2.0 dCi 175 4WD	110 135 135 140 130 130	06/19→ 01/20→ 01/20→ 06/19→ 08/16→ 08/16→	⬅			**13.0460-5686.2**	**605686**	AKE + WK
RENAULT - LAGUNA II (BG0/1_) 03/01→12/07								
Guide Bolt, brake caliper								
1.6 1.6 16V 1.6 LPG 1.8 16V 1.9 dCi 1.9 dCI 2.0 16V 2.0 16V Turbo 2.0 dCi 2.2 dCi 2.9 V6 24V	76 79 79 86 - 89 68 - 74 77 98 120 110 85 155	03/01→05/05 03/01→05/05 03/01→05/05 03/01→05/05 10/01→05/05 06/01→05/05 08/02→12/06 01/03→03/05 08/05→08/06 04/04→10/05 03/01→08/07	⬅		2	**11.8171-0008.1**	**990049**	ATE
1.6 16V 1.8 16V 1.9 dCi 2.0 16V 2.0 16V IDE 2.0 dCi 2.2 dCi 3.0 V6 24V	82 85 - 88 79 - 96 99 - 150 103 127 102 152	02/05→08/07 03/01→12/07 03/01→12/07 08/02→12/07 04/01→09/07 01/06→08/07 05/05→08/07 03/01→08/07	⬅	→ 06/07	2	**11.8171-0008.1**	**990049**	ATE
2.2 dCi	110	10/01→08/06	⬅	12/01→ 04/05	2	**11.8171-0008.1**	**990049**	ATE
			⬅	05/05→	2	**11.8171-0008.1**	**990049**	ATE
			⬅	→ 11/01	2	**11.8171-0008.1**	**990049**	ATE
RENAULT - LAGUNA II Grandtour (KG0/1_) 03/01→12/07								
Guide Bolt, brake caliper								
1.6 1.8 16V 1.9 dCi 1.9 dCI 2.0 16V Turbo 2.2 dCi 2.9 V6 24V 3.0 V6 24V	76 85 - 89 68 - 74 77 120 85 155 152	03/01→10/05 03/01→05/05 10/01→05/05 06/01→05/05 01/03→08/05 04/04→10/05 10/03→12/07 03/01→12/07			2	**11.8171-0008.1**	**990049**	ATE
1.6 16V 1.6 Bifuel 1.9 dCi 2.0 16V 2.0 16V IDE 2.0 dCi 2.2 dCi	79 - 82 79 79 - 96 98 - 150 103 127 102	03/01→12/07 06/05→12/07 03/01→12/07 08/02→12/07 04/01→09/07 01/06→12/07 05/05→12/07		→ 06/07	2	**11.8171-0008.1**	**990049**	ATE
1.9 dCi	66	08/03→09/07		03/04→ 06/07	2	**11.8171-0008.1**	**990049**	ATE
2.0 dCi	110	08/05→08/06		Rim Size [in]: 16	2	**11.8171-0008.1**	**990049**	ATE
					2	**11.8171-0008.1**	**990049**	ATE

	kW				! #			
RENAULT - LAGUNA II Grandtour (KG0/1_) 03/01→12/07								
Guide Bolt, brake caliper								
2.2 dCi	110	10/01→08/06		12/01→ 04/05	2	**11.8171-0008.1**	**990049**	ATE
				→ 11/01	2	**11.8171-0008.1**	**990049**	ATE
				05/05→	2	**11.8171-0008.1**	**990049**	ATE
RENAULT - LATITUDE (L70_) 07/10→								
Guide Bolt, brake caliper								
1.5 dCi	81	07/10→	➡	02/11→ 06/13		**11.8171-0008.1**	**990049**	ATE
1.6 RS	132	04/14→	⬅			**11.8171-0008.1**	**990049**	ATE
			➡			**11.8171-0008.1**	**990049**	ATE
2.0 16V 2.0 16V eco2 Flexfuel 2.0 dCi 150 2.0 dCi 175 2.5 V6 3.0 dCi 240	102 - 105 103 110 127 130 177	01/11→ 02/11→ 02/11→ 05/11→ 05/11→ 02/11→	➡	→ 06/13		**11.8171-0008.1**	**990049**	ATE
2.0 dCi 130	96	12/13→	➡			**11.8171-0008.1**	**990049**	ATE
Brake Pad Set, disc brake								
2.0 dCi 175	127	05/11→	⬅			**13.0460-5716.2**	**605716**	21561 17,0 + WK
RENAULT - LODGY (JS_) 07/13→								
Spring, brake caliper								
1.5 dCi 1.6	62 59	01/15→ 07/13→	⬅	+ ESP	2	**11.8116-0356.1**	**390586**	ATE
Brake Pad Set, disc brake								
1.5 dCi 1.6	62 59	01/15→ 07/13→	⬅	+ ESP		**13.0460-7266.2** **13.0470-7266.2**	**607266** **LD7266**	ATE 24538 17,9 - WE / - WK ATE 24538 17,9 - WE / - WK Ceramic
Sensor, wheel speed								
1.5 dCi 1.6	62 59	01/15→ 07/13→	⬅		2	**24.0711-5369.3**	**360378**	L= 619
Wheel Brake Cylinder								
1.5 dCi 1.6	62 59	01/15→ 07/13→	➡		2	**24.3222-1729.3**	**020526**	ALU
Accessory Kit, brake shoes								
1.5 dCi 1.6	62 59	01/15→ 07/13→	➡			**03.0137-9228.2**	**669228**	BDX
Brake Shoe Set								
1.5 dCi 1.6	62 59	01/15→ 07/13→	➡			**03.0137-0496.2** **03.0520-7222.3**	**650496** **697222**	BDX Ø 228 Width [mm] 42 + HEB Ø 228 Width [mm] 42 + RZ / + Zub TopKit
RENAULT - LOGAN/STEPWAY II (L8_) 09/12→								
Guide Bolt, brake caliper								
1.2 1.2 16V LPG 1.5 dCi 1.6	55 53 62 - 66 59 - 83	11/13→ 11/13→ 12/13→ 11/13→	⬅			**11.8171-0008.1**	**990049**	ATE
Brake Hose								
1.2 1.2 16V LPG 1.5 dCi 1.6	55 53 62 - 66 59 - 83	11/13→ 11/13→ 12/13→ 11/13→	⬅		2	**24.5111-0450.3**	**331557**	L= 450
Sensor, wheel speed								
1.2 1.2 16V LPG 1.5 dCi 1.6	55 53 62 - 66 59 - 83	11/13→ 11/13→ 12/13→ 11/13→	⬅		2	**24.0711-5369.3**	**360378**	L= 619

© 2022 Continental Aftermarket & Services GmbH

	kW				! #			
RENAULT - LOGAN/STEPWAY II (L8_) 09/12→								
Wheel Brake Cylinder								
1.2 1.2 16V LPG 1.5 dCi 1.6	55 53 62 - 66 59 - 83	11/13→ 11/13→ 12/13→ 11/13→	➡	+ ABS	2	**24.3222-1729.3**	**020526**	ALU
Accessory Kit, brake shoes								
1.2 1.2 16V LPG 1.5 dCi 1.6	55 53 62 - 66 59 - 83	11/13→ 11/13→ 12/13→ 11/13→	➡			**03.0137-9228.2**	**669228**	BDX
Brake Shoe Set								
1.2 1.2 16V LPG 1.5 dCi 1.6	55 53 62 - 66 59 - 83	11/13→ 11/13→ 12/13→ 11/13→	➡			**03.0137-0496.2**	**650496**	BDX Ø 228 Width [mm] 42 + HEB
RENAULT - LOGAN II Estate (K8_) 11/13→								
Brake Hose								
1.2 16V 1.2 16V LPG 1.5 dCi 1.6	54 53 62 - 66 59	12/13→ 12/13→ 12/13→ 12/13→	⬅		2	**24.5111-0450.3**	**331557**	L= 450
Sensor, wheel speed								
1.2 16V 1.2 16V LPG 1.5 dCi 1.6	54 53 62 - 66 59	12/13→ 12/13→ 12/13→ 12/13→	⬅		2	**24.0711-5369.3**	**360378**	L= 619
Accessory Kit, brake shoes								
1.5 dCi 1.6	62 - 66 59	12/13→ 12/13→	➡			**03.0137-9228.2**	**669228**	BDX
Brake Shoe Set								
1.5 dCi 1.6	62 - 66 59	12/13→ 12/13→	➡			**03.0137-0496.2**	**650496**	BDX Ø 228 Width [mm] 42 + HEB
RENAULT - LOGAN EXPRESS (US_) 04/07→								
Wheel Brake Cylinder								
1.5 dCi 1.6	50 64	04/07→ 04/07→	➡	→ 04/13; for increased payload		**24.3222-1729.3**	**020526**	ALU
Accessory Kit, brake shoes								
1.5 dCi 1.6	50 64	04/07→ 04/07→	➡	→ 04/13		**03.0137-9228.2**	**669228**	BDX
Brake Shoe Set								
1.5 dCi 1.6	50 64	04/07→ 04/07→	➡	→ 04/13		**03.0137-0496.2** **03.0520-7222.3**	**650496** **697222**	BDX Ø 228 Width [mm] 42 + HEB Ø 228 Width [mm] 42 + RZ / + Zub TopKit
RENAULT - MEGANE II (BM0/1_, CM0/1_) 07/01→10/12								
Guide Bolt, brake caliper								
1.4 16V	60 - 72	11/02→02/08		10/05→	2	**11.8171-0008.1**	**990049**	ATE
1.5 dCi 1.6 16V 1.9 dCi 2.0 16V 2.0 16V Turbo	63 83 88 99 120	05/05→02/08 11/02→02/08 11/02→02/08 11/02→02/08 05/04→02/08			2	**11.8171-0008.1**	**990049**	ATE
1.5 dCi	74	10/03→02/08	⬅	10/05→	2	**11.8171-0008.1**	**990049**	ATE
			➡		2	**11.8171-0008.1**	**990049**	ATE
1.5 dCi	60	09/02→02/08		10/05→	2	**11.8171-0008.1**	**990049**	ATE
				11/02→	2	**11.8171-0008.1**	**990049**	ATE

	kW				! #			
RENAULT - MEGANE II (BM0/1_, CM0/1_) 07/01→10/12								
Guide Bolt, brake caliper								
1.5 dCi 1.9 dCi 2.0 Renault Sport	76 96 165	01/07→03/09 05/05→12/09 05/04→10/09		→ 11/08	2	**11.8171-0008.1**	**990049**	ATE
1.5 dCi 1.6 1.6 16V 1.6 Flex-Fuel 2.0 2.0 dCi	78 77 - 79 82 77 169 110	05/05→06/08 06/05→01/11 01/06→06/08 01/07→02/08 08/06→02/08 09/05→02/08			2	**11.8171-0008.1**	**990049**	ATE
1.6 Bifuel	77	06/05→02/08		01/07→	2	**11.8171-0008.1**	**990049**	ATE
1.9 dCi	68 - 85	11/02→02/08		01/06→	2	**11.8171-0008.1**	**990049**	ATE
RENAULT - MEGANE II Coupé-Cabriolet (EM0/1_) 09/03→03/10								
Guide Bolt, brake caliper								
1.5 dCi 2.0 dCi	76 110	01/07→06/09 09/05→03/09			2	**11.8171-0008.1**	**990049**	ATE
1.5 dCi	78	03/06→01/09		→ 06/08	2	**11.8171-0008.1**	**990049**	ATE
1.6 1.9 dCi 2.0 2.0 16V Turbo	77 - 83 81 - 96 102 120	09/03→03/09 09/03→03/09 09/03→02/07 05/04→03/09		10/05→	2	**11.8171-0008.1**	**990049**	ATE
1.6 16V	82	01/06→06/08		01/07→	2	**11.8171-0008.1**	**990049**	ATE
1.9 dCi	85	09/03→03/09		01/06→	2	**11.8171-0008.1**	**990049**	ATE
2.0	99	09/03→12/09		10/05→ 03/07	2	**11.8171-0008.1**	**990049**	ATE
RENAULT - MEGANE II Estate (KM0/1_) 08/03→08/12								
Guide Bolt, brake caliper								
1.4 1.6 1.9 dCi 2.0	72 83 81 - 88 99	08/03→07/09 08/03→07/09 08/03→07/09 08/03→07/09		10/05→ 12/08	2	**11.8171-0008.1**	**990049**	ATE
1.5 dCi 1.6 16V 1.9 dCi	60 - 78 75 - 77 66 - 68	08/03→07/09 05/05→07/09 03/04→02/07		10/05→	2	**11.8171-0008.1**	**990049**	ATE
1.5 dCi 1.6 16V Hi-Flex 2.0 dCi	76 77 110	01/07→07/09 02/08→07/09 09/05→07/09		→ 12/08	2	**11.8171-0008.1**	**990049**	ATE
1.6 16V	81	05/06→10/11		→ 07/09	2	**11.8171-0008.1**	**990049**	ATE
1.6 16V	82	01/06→08/09		01/07→ 12/08	2	**11.8171-0008.1**	**990049**	ATE
1.6 LPG 16V 2.0	82 102	01/06→08/09 12/06→01/11			2	**11.8171-0008.1**	**990049**	ATE
1.9 dCi	96	05/05→07/09		10/05→ 02/07	2	**11.8171-0008.1**	**990049**	ATE
RENAULT - MEGANE II Estate Van (KM_) 08/03→07/09								
Guide Bolt, brake caliper								
1.5 dCi 1.6	60 - 78 82	08/03→07/09 10/03→01/08		10/05→	2	**11.8171-0008.1**	**990049**	ATE
1.9 dCi	96	02/06→10/06			2	**11.8171-0008.1**	**990049**	ATE
RENAULT - MEGANE II Hatchback Van (KM0/2_) 08/03→07/09								
Guide Bolt, brake caliper								
1.5 dCi	60 - 63	08/03→02/08		10/05→	2	**11.8171-0008.1**	**990049**	ATE
					2	**11.8171-0008.1**	**990049**	ATE
1.5 dCi	74	08/03→02/08	←	10/05→	2	**11.8171-0008.1**	**990049**	ATE
			→		2	**11.8171-0008.1**	**990049**	ATE
1.5 dCi	76 - 78	05/05→03/09			2	**11.8171-0008.1**	**990049**	ATE
RENAULT - MEGANE II Saloon (LM0/1_) 08/03→								
Guide Bolt, brake caliper								
1.4	60	09/03→	→	→ 08/06	2	**11.8171-0008.1**	**990049**	ATE
1.4	72	09/03→	→	→ 12/08	2	**11.8171-0008.1**	**990049**	ATE
1.5 dCi	74	02/04→12/10		10/05→ 03/06	2	**11.8171-0008.1**	**990049**	ATE

© 2022 Continental Aftermarket & Services GmbH

	kW				! #			
RENAULT - MEGANE II Saloon (LM0/1_) 08/03→								
Guide Bolt, brake caliper								
1.5 dCi	74	02/04→12/10	➡	→ 03/06	2	**11.8171-0008.1**	**990049**	ATE
1.5 dCi	60	08/03→12/10		10/05→ 12/08	2	**11.8171-0008.1**	**990049**	ATE
			➡	09/03→ 12/08	2	**11.8171-0008.1**	**990049**	ATE
1.5 dCi 1.6 16V	76 82	10/03→12/10 01/06→		01/07→ 12/08	2	**11.8171-0008.1**	**990049**	ATE
			➡	01/07→ 12/08	2	**11.8171-0008.1**	**990049**	ATE
1.5 dCi 1.6 1.9 dCi 2.0	63 - 78 77 - 83 68 - 96 99	05/05→12/10 09/03→ 09/03→ 09/03→		10/05→ 12/08	2	**11.8171-0008.1**	**990049**	ATE
			➡	→ 12/08	2	**11.8171-0008.1**	**990049**	ATE
1.6	81	09/03→11/08		10/05→	2	**11.8171-0008.1**	**990049**	ATE
1.6 Hi-Flex 2.0 dCi	85 110	03/06→ 09/05→		→ 12/08	2	**11.8171-0008.1**	**990049**	ATE
			➡	→ 12/08	2	**11.8171-0008.1**	**990049**	ATE
1.9 dCi	66	09/03→12/05		10/05→	2	**11.8171-0008.1**	**990049**	ATE
			➡		2	**11.8171-0008.1**	**990049**	ATE
2.0	101	04/06→11/10			2	**11.8171-0008.1**	**990049**	ATE
RENAULT - MEGANE III Combi Van (KZ0/1) 01/09→08/15								
Spring, brake caliper								
1.5 dCi	63 - 81	01/09→08/15	⬅		2	**11.8116-0356.1**	**390586**	ATE
Brake Pad Set, disc brake								
1.5 dCi	63 - 81	01/09→08/15	⬅			**13.0460-7266.2** **13.0470-7266.2**	**607266** **LD7266**	ATE 24538 17,9 - WE / - WK ATE 24538 17,9 - WE / - WK Ceramic
RENAULT - MEGANE III Coupe (DZ0/1_) 11/08→								
Spring, brake caliper								
1.2 TCe 1.4 TCe 1.5 dCi 1.6 16V 1.6 16V Bifuel 1.6 dCi 1.9 dCi 2.0 CVT	85 - 97 96 63 - 81 74 - 81 81 96 96 103	03/12→08/15 04/09→ 11/08→ 11/08→ 11/08→ 04/11→08/15 11/08→08/15 05/09→	⬅		2	**11.8116-0356.1**	**390586**	ATE
Brake Pad Set, disc brake								
1.2 TCe 1.4 TCe 1.5 dCi 1.6 16V 1.6 16V Bifuel 1.6 dCi 1.9 dCi 2.0 CVT	85 - 97 96 63 - 81 74 - 81 81 96 96 103	03/12→08/15 04/09→ 11/08→ 11/08→ 11/08→ 04/11→08/15 11/08→08/15 05/09→	⬅			**13.0460-7266.2** **13.0470-7266.2**	**607266** **LD7266**	ATE 24538 17,9 - WE / - WK ATE 24538 17,9 - WE / - WK Ceramic
RENAULT - MEGANE III Grandtour (KZ0/1) 11/08→								
Spring, brake caliper								
1.2 TCe 1.4 TCe 1.5 dCi 1.6 16V 1.6 BiFuel 1.6 dCi 1.9 dCi 2.0 CVT	85 - 97 96 63 - 81 74 - 81 81 96 96 103	03/12→ 05/09→ 02/09→ 05/09→ 11/08→ 04/11→ 05/09→ 05/09→	⬅		2	**11.8116-0356.1**	**390586**	ATE
Brake Pad Set, disc brake								
1.2 TCe 1.4 TCe	85 - 97 96	03/12→ 05/09→	⬅			**13.0460-7266.2** **13.0470-7266.2**	**607266** **LD7266**	ATE 24538 17,9 - WE / - WK ATE 24538 17,9 - WE / - WK Ceramic

	kW				! #			
RENAULT - MEGANE III Grandtour (KZ0/1) 11/08→								
Brake Pad Set, disc brake								
1.5 dCi	63 - 81	02/09→				**13.0460-7266.2**	**607266**	ATE 24538 17,9 - WE / - WK
1.6 16V	74 - 81	05/09→				**13.0470-7266.2**	**LD7266**	ATE 24538 17,9 - WE / - WK Ceramic
1.6 BiFuel	81	11/08→						
1.6 dCi	96	04/11→						
1.9 dCi	96	05/09→						
2.0 CVT	103	05/09→						
RENAULT - MEGANE III Hatchback (BZ0/1_, B3_) 11/08→								
Spring, brake caliper								
1.2 TCe	85 - 97	03/12→			2	**11.8116-0356.1**	**390586**	ATE
1.4 TCe	96	04/09→						
1.5 dCi	63 - 81	11/08→						
1.6	86	01/14→						
1.6 16V	74 - 85	11/08→						
1.6 16V BiFuel	81	05/09→08/15						
1.6 16V Hi-Flex	81	11/08→08/15						
1.6 dCi	96	04/11→08/15						
1.9 dCi	96	11/08→						
2.0	105	01/11→						
2.0 CVT	103	02/09→						
Brake Pad Set, disc brake								
1.2 TCe	85 - 97	03/12→				**13.0460-7266.2**	**607266**	ATE 24538 17,9 - WE / - WK
1.4 TCe	96	04/09→				**13.0470-7266.2**	**LD7266**	ATE 24538 17,9 - WE / - WK Ceramic
1.5 dCi	63 - 81	11/08→						
1.6	86	01/14→						
1.6 16V	74 - 85	11/08→						
1.6 16V BiFuel	81	05/09→08/15						
1.6 16V Hi-Flex	81	11/08→08/15						
1.6 dCi	96	04/11→08/15						
1.9 dCi	96	11/08→						
2.0	105	01/11→						
2.0 CVT	103	02/09→						
2.0 TCe 220	162	11/13→						
RENAULT - MEGANE III Hatchback Van (BZ_) 11/08→08/15								
Spring, brake caliper								
1.5 dCi	66 - 81	11/08→08/15			2	**11.8116-0356.1**	**390586**	ATE
Brake Pad Set, disc brake								
1.5 dCi	66 - 81	11/08→08/15				**13.0460-7266.2**	**607266**	ATE 24538 17,9 - WE / - WK
						13.0470-7266.2	**LD7266**	ATE 24538 17,9 - WE / - WK Ceramic
RENAULT - MEGANE IV Grandtour (K9A/M/N_) 04/16→								
Brake Pad Set, disc brake								
1.3 TCe 160	116	08/21→				**13.0460-5688.2**	**605688**	AKE - WE / - WK
1.6 TCe 165	121	07/17→						
E-TECH 160	116	05/20→						
1.5 Blue dCi 115	85	08/18→		Observe dimensions		**13.0460-5688.2**	**605688**	AKE - WE / - WK
1.8 Blue dCi 150	110	02/19→						
1.6 dCi 165	120	04/16→		03/17→		**13.0460-5688.2**	**605688**	AKE - WE / - WK
1.6 TCe 205	151	04/16→						
RENAULT - MEGANE IV Hatchback (B9A/M/N_) 11/15→								
Brake Pad Set, disc brake								
1.3 TCe 160	116	08/21→				**13.0460-5688.2**	**605688**	AKE - WE / - WK
1.6 E-TECH 160	118	07/21→						
1.6 TCe 165	121	07/17→						
1.3 TCe 160	117	11/18→		Observe dimensions		**13.0460-5688.2**	**605688**	AKE - WE / - WK
1.5 Blue dCi 115	85	08/18→						
1.8 Blue dCi 150	110	02/19→						
1.6 dCi 165	120	11/15→		03/17→		**13.0460-5688.2**	**605688**	AKE - WE / - WK
1.6 TCe 205	151	11/15→						

© 2022 Continental Aftermarket & Services GmbH

	kW				! #			
RENAULT - MEGANE CC (EZ0/1_) 06/10→								
Spring, brake caliper								
1.2 TCe 1.4 TCe 1.5 dCi 1.6 16V 1.6 16V Hi-Flex 1.6 dCi 1.9 dCi 2.0 CVT	85 96 78 - 81 81 81 96 96 103	09/12→08/15 06/10→ 06/10→ 06/10→ 06/10→ 04/11→ 06/10→ 06/10→	←		2	**11.8116-0356.1**	**390586**	ATE
1.2 TCe	97	01/13→	←	04/13→	2	**11.8116-0356.1**	**390586**	ATE
Brake Pad Set, disc brake								
1.2 TCe 1.4 TCe 1.5 dCi 1.6 16V 1.6 16V Hi-Flex 1.6 dCi 1.9 dCi 2.0 CVT	85 96 78 - 81 81 81 96 96 103	09/12→08/15 06/10→ 06/10→ 06/10→ 06/10→ 04/11→ 06/10→ 06/10→	←			**13.0460-7266.2** **13.0470-7266.2**	**607266** **LD7266**	ATE 24538 17,9 - WE / - WK ATE 24538 17,9 - WE / - WK Ceramic
1.2 TCe	97	01/13→	←	04/13→		**13.0460-7266.2** **13.0470-7266.2**	**607266** **LD7266**	ATE 24538 17,9 - WE / - WK ATE 24538 17,9 - WE / - WK Ceramic
RENAULT - SANDERO/STEPWAY II (B8_) 11/13→								
Guide Bolt, brake caliper								
TCe 90	66	09/15→	←			**11.8171-0008.1**	**990049**	ATE
Brake Hose								
1.2 16V 1.2 16V LPG 1.5 dCi 1.6 1.6 16V 1.6 Flex TCe 90	54 - 55 53 62 59 - 83 75 78 66	12/13→ 12/13→ 12/13→ 11/13→ 04/14→ 09/14→ 09/15→	←		2	**24.5111-0450.3**	**331557**	L= 450
Sensor, wheel speed								
1.2 16V 1.2 16V LPG 1.5 dCi 1.6 1.6 16V 1.6 Flex TCe 90	54 - 55 53 62 59 - 83 75 78 66	12/13→ 12/13→ 12/13→ 11/13→ 04/14→ 09/14→ 09/15→	←		2	**24.0711-5369.3**	**360378**	L= 619
Accessory Kit, brake shoes								
1.2 16V 1.5 dCi 1.6 1.6 16V 1.6 Flex	55 62 59 - 83 75 78	04/15→ 12/13→ 11/13→ 04/14→ 09/14→	→			**03.0137-9228.2**	**669228**	BDX
TCe 90	66	09/15→	→	Inner Br. Drum Diam. [in]: 9		**03.0137-9228.2**	**669228**	BDX
Brake Shoe Set								
1.2 16V 1.5 dCi 1.6 1.6 16V 1.6 Flex	55 62 59 - 83 75 78	04/15→ 12/13→ 11/13→ 04/14→ 09/14→	→			**03.0137-0496.2**	**650496**	BDX Ø 228 Width [mm] 42 + HEB
TCe 90	66	09/15→	→	Inner Br. Drum Diam. [in]: 9		**03.0137-0496.2**	**650496**	BDX Ø 228 Width [mm] 42 + HEB
RENAULT - SCÉNIC II (JM0/1_) 06/03→07/10								
Brake Caliper								
1.5 dCi 1.6 1.6 BiFuel 1.6 Hi-Flex	60 - 63 83 83 81	06/03→11/08 06/03→10/06 08/03→05/06 03/05→07/10	←	11/05→; ⊞		**24.3541-1879.5**	**241429**	ATE without holder

	kW				! #			
RENAULT - SCÉNIC II (JM0/1_) 06/03→07/10								
Brake Caliper								
1.9 dCi 2.0 16V Turbo	72 - 96 120	06/03→11/08 05/04→11/08		11/05→;		**24.3541-1879.5**	**241429**	ATE without holder
1.5 dCi 1.6 1.6 16V 1.9 D 1.9 dCi 130 2.0 dCi	76 77 82 85 97 110	01/07→11/08 06/06→11/08 10/05→11/08 06/06→11/08 10/05→12/09 09/05→11/08				**24.3541-1879.5**	**241429**	ATE without holder
Guide Bolt, brake caliper								
1.4 1.5 dCi 1.6 1.6 BiFuel 1.6 Hi-Flex 1.9 dCi 2.0 16V Turbo	72 60 - 78 83 83 81 72 - 96 120	06/03→11/08 06/03→11/08 06/03→10/06 08/03→05/06 03/05→07/10 06/03→11/08 05/04→11/08		10/05→	2	**11.8171-0008.1**	**990049**	ATE
1.5 dCi 1.6 1.9 D 1.9 dCi 130 2.0 dCi	76 77 85 97 110	01/07→11/08 06/06→11/08 06/06→11/08 10/05→12/09 09/05→11/08			2	**11.8171-0008.1**	**990049**	ATE
1.6 16V	82	10/05→11/08		01/07→	2	**11.8171-0008.1**	**990049**	ATE
2.0	99	06/03→06/09		10/05→ 03/09	2	**11.8171-0008.1**	**990049**	ATE
2.0	101	02/08→04/09		→ 03/09	2	**11.8171-0008.1**	**990049**	ATE
RENAULT - SCÉNIC III (JZ0/1_) 12/08→								
Spring, brake caliper								
1.5 dCi 1.6 16V 1.6 16V Bifuel	63 - 81 81 79	04/09→ 02/09→ 04/12→12/13		Rim Size [in]: 15	2	**11.8116-0356.1**	**390586**	ATE
1.5 dCi	78	02/09→		04/09→; Rim Size [in]: 15	2	**11.8116-0356.1**	**390586**	ATE
1.6 16V Bifuel 1.6 E85	81 81	02/09→ 02/09→		06/09→; Rim Size [in]: 15	2	**11.8116-0356.1**	**390586**	ATE
Brake Pad Set, disc brake								
1.5 dCi 1.6 16V 1.6 16V Bifuel	63 - 81 81 79	04/09→ 02/09→ 04/12→12/13		Rim Size [in]: 15		**13.0460-7266.2** **13.0470-7266.2**	**607266** **LD7266**	ATE 24538 17,9 - WE / - WK ATE 24538 17,9 - WE / - WK Ceramic
1.5 dCi	78	02/09→		04/09→; Rim Size [in]: 15		**13.0460-7266.2** **13.0470-7266.2**	**607266** **LD7266**	ATE 24538 17,9 - WE / - WK ATE 24538 17,9 - WE / - WK Ceramic
1.6 16V Bifuel 1.6 E85	81 81	02/09→ 02/09→		06/09→; Rim Size [in]: 15		**13.0460-7266.2** **13.0470-7266.2**	**607266** **LD7266**	ATE 24538 17,9 - WE / - WK ATE 24538 17,9 - WE / - WK Ceramic
RENAULT - SCÉNIC III VAN (JZ0/1_) 12/08→								
Spring, brake caliper								
1.5 dCi 1.6 VVT	70 - 81 81	04/09→ 01/13→		Rim Size [in]: 15	2	**11.8116-0356.1**	**390586**	ATE
Brake Pad Set, disc brake								
1.5 dCi 1.6 VVT	70 - 81 81	04/09→ 01/13→		Rim Size [in]: 15		**13.0460-7266.2** **13.0470-7266.2**	**607266** **LD7266**	ATE 24538 17,9 - WE / - WK ATE 24538 17,9 - WE / - WK Ceramic
RENAULT - SCÉNIC IV (J9_) 09/16→								
Brake Pad Set, disc brake								
1.2 TCe 115 1.2 TCe 130 1.5 dCi 110 1.5 dCi 95 1.6 dCi 130 1.6 dCi 160	85 96 81 70 96 118	09/16→ 09/16→ 09/16→ 09/16→ 09/16→ 09/16→		03/17→		**13.0460-5688.2**	**605688**	AKE - WE / - WK
1.3 TCe 115 1.3 TCe 140 1.3 TCe 160	85 103 117 - 120	01/18→ 01/18→ 01/18→				**13.0460-5688.2**	**605688**	AKE - WE / - WK

© 2022 Continental Aftermarket & Services GmbH

	kW				! #			
RENAULT - SCÉNIC IV (J9_) 09/16→								
Brake Pad Set, disc brake								
1.5 dCi 110 Hybrid Assist	81	04/17→				**13.0460-5688.2**	**605688**	AKE - WE / - WK
1.7 Blue dCi 120	88	08/18→						
1.7 Blue dCi 150	110	08/18→						
RENAULT - TALISMAN (LP_) 06/15→								
Brake Pad Set, disc brake								
1.3 TCe 160	116 - 117	01/19→		Observe dimensions		**13.0460-5688.2**	**605688**	AKE - WE / - WK
1.7 Blue dCi 120	88	09/18→						
1.7 Blue dCi 150	110	09/18→						
1.8 TCe 225	165	09/18→						
2.0 Blue dCi 160	118	01/19→						
2.0 Blue dCi 190	139	07/21→						
2.0 Blue dCi 200	147	01/19→						
RENAULT - TALISMAN Grandtour (KP_) 03/16→								
Brake Pad Set, disc brake								
1.3 TCe 160	116 - 117	01/19→		Observe dimensions		**13.0460-5688.2**	**605688**	AKE - WE / - WK
1.7 Blue dCi 120	88	09/18→						
1.7 Blue dCi 150	110	09/18→						
1.8 TCe 225	165	09/18→						
2.0 Blue dCi 160	118	01/19→						
2.0 Blue dCi 190	139	07/21→						
2.0 Blue dCi 200	147	01/19→						
RENAULT - THALIA III (L8_) 12/13→								
Guide Bolt, brake caliper								
1.0 SCe	54	01/17→				**11.8171-0008.1**	**990049**	ATE
1.5 dCi	70	11/19→						
Brake Hose								
0.9 TCe	66	06/14→			2	**24.5111-0450.3**	**331557**	L= 450
1.0 SCe	54	01/17→						
1.2 16V	55	12/13→						
1.2 LPG	55	03/14→						
1.5 dCi	55 - 70	12/13→						
Sensor, wheel speed								
0.9 TCe	66	06/14→			2	**24.0711-5369.3**	**360378**	L= 619
1.0 SCe	54	01/17→						
1.2 16V	55	12/13→						
1.2 LPG	55	03/14→						
1.5 dCi	55 - 70	12/13→						
Wheel Brake Cylinder								
1.2 LPG	55	03/14→		+ ABS	2	**24.3222-1729.3**	**020526**	ALU
Accessory Kit, brake shoes								
0.9 TCe	66	06/14→				**03.0137-9228.2**	**669228**	BDX
1.5 dCi	55 - 66	12/13→						
1.2 16V	55	12/13→		Inner Br. Drum Diam. [in]: 9		**03.0137-9228.2**	**669228**	BDX
1.2 LPG	55	03/14→						
Brake Shoe Set								
0.9 TCe	66	06/14→				**03.0137-0496.2**	**650496**	BDX Ø 228 Width [mm] 42 + HEB
1.5 dCi	55 - 66	12/13→						
1.2 16V	55	12/13→		Inner Br. Drum Diam. [in]: 9		**03.0137-0496.2**	**650496**	BDX Ø 228 Width [mm] 42 + HEB
1.2 LPG	55	03/14→						
RENAULT - TWINGO II (CN0_) 03/07→								
Accessory Kit, brake shoes								
1.2	43	03/07→09/14		10/12→ 07/14		**03.0137-9317.2**	**669317**	
1.2 16V	55 - 56	03/07→						
1.2 TCe 100	75	02/11→						
1.2 Turbo	74	03/07→09/14						
1.5 dCi	47 - 62	03/07→09/14						
1.5 dCi 75	55	10/10→						
1.5 dCi 90	63	10/10→						

© 2022 Continental Aftermarket & Services GmbH

	kW				! #			
RENAULT - TWINGO II Hatchback Van (CNO_) 09/10→09/14								
Accessory Kit, brake shoes								
1.2 1.5 dCi	55 55	09/10→09/14 10/10→09/14	➡	10/12→		**03.0137-9317.2**	**669317**	
RENAULT - TWINGO III (BCM_, BCA_) 09/14→								
Accessory Kit, brake shoes								
0.9 TCe 110 0.9 TCe 90 0.9 TCe 90 LPG 0.9 TCe 95 Z.E:	80 66 66 68 60	11/16→ 09/14→ 08/18→ 03/19→ 05/20→	➡			**03.0137-9309.2**	**669309**	AP
1.0 SCe 65 1.0 SCe 75	48 54	03/19→ 03/19→	➡	for individual equipment ID: PRODIS		**03.0137-9309.2**	**669309**	AP
			➡	for individual equipment ID: SPRODI		**03.0137-9317.2**	**669317**	
1.0 SCe 70	51 - 52	09/14→	➡	Manual Transmission; for vehicles with start-stop function		**03.0137-9309.2**	**669309**	AP
			➡	Automatic Transmission		**03.0137-9309.2**	**669309**	AP
			➡	Manual Transmission; for vehicles without start-stop function		**03.0137-9317.2**	**669317**	
RENAULT - VEL SATIS (BJ0_) 06/02→								
Guide Bolt, brake caliper								
2.0 16 V Turbo 2.0 dCi 2.0 Turbo 2.2 dCi 3.5 3.5 V6	125 110 - 127 108 83 - 102 170 177	04/04→ 08/05→ 04/05→ 04/04→ 10/04→ 06/02→		→ 12/09	2	**11.8171-0008.1**	**990049**	ATE
2.0 16V Turbo 2.2 dCi 3.0 dCi	120 110 130 - 133	06/02→08/09 06/02→08/09 06/02→08/09			2	**11.8171-0008.1**	**990049**	ATE
RENAULT - ZOE (BFM_) 06/12→								
Spring, brake caliper								
ZOE ZOE R75	65 - 80 57	06/12→ 12/17→	⬅	09/19→	2	**11.8116-0356.1**	**390586**	ATE
ZOE	100	09/19→	⬅		2	**11.8116-0356.1**	**390586**	ATE
Guide Bolt, brake caliper								
ZOE ZOE R75	65 - 80 57	06/12→ 12/17→	⬅	09/19→		**11.8171-0008.1**	**990049**	ATE
ZOE	100	09/19→	⬅			**11.8171-0008.1**	**990049**	ATE
Brake Pad Set, disc brake								
ZOE ZOE R75	65 - 80 57	06/12→ 12/17→	⬅	09/19→		**13.0460-7266.2** **13.0470-7266.2**	**607266** **LD7266**	ATE 24538 17,9 - WE / - WK ATE 24538 17,9 - WE / - WK Ceramic
ZOE	100	09/19→	⬅			**13.0460-7266.2** **13.0470-7266.2**	**607266** **LD7266**	ATE 24538 17,9 - WE / - WK ATE 24538 17,9 - WE / - WK Ceramic
Wheel Brake Cylinder								
ZOE ZOE R75	65 - 68 57	06/12→ 12/17→	➡			**24.3222-1729.3**	**020526**	ALU
ZOE	80	08/18→	➡		2	**24.3222-1729.3**	**020526**	ALU
Accessory Kit, brake shoes								
ZOE ZOE R75	65 - 80 57	06/12→ 12/17→	➡			**03.0137-9228.2**	**669228**	BDX
Brake Shoe Set								
ZOE ZOE R75	65 - 80 57	06/12→ 12/17→	➡			**03.0137-0496.2** **03.0520-7222.3**	**650496** **697222**	BDX Ø 228 Width [mm] 42 + HEB Ø 228 Width [mm] 42 + RZ / + Zub TopKit

© 2022 Continental Aftermarket & Services GmbH

	kW				! #			
RENAULT - ZOE Hatchback Van (BFM_) 04/19→								
Spring, brake caliper								
Electric	65 - 80	04/19→	←	09/19→	2	**11.8116-0356.1**	**390586**	ATE
Electric	100	10/19→	←		2	**11.8116-0356.1**	**390586**	ATE
Guide Bolt, brake caliper								
Electric	65 - 80	04/19→	←	09/19→		**11.8171-0008.1**	**990049**	ATE
Electric	100	10/19→	←			**11.8171-0008.1**	**990049**	ATE
Brake Pad Set, disc brake								
Electric	65 - 80	04/19→	←	09/19→		**13.0460-7266.2** **13.0470-7266.2**	**607266** **LD7266**	ATE 24538 17,9 - WE / - WK ATE 24538 17,9 - WE / - WK Ceramic
Electric	100	10/19→	←			**13.0460-7266.2** **13.0470-7266.2**	**607266** **LD7266**	ATE 24538 17,9 - WE / - WK ATE 24538 17,9 - WE / - WK Ceramic
Wheel Brake Cylinder								
Electric	65 - 80	04/19→	→		2	**24.3222-1729.3**	**020526**	ALU
Accessory Kit, brake shoes								
Electric	65 - 80	04/19→	→			**03.0137-9228.2**	**669228**	BDX
Brake Shoe Set								
Electric	65 - 80	04/19→	→			**03.0137-0496.2** **03.0520-7222.3**	**650496** **697222**	BDX Ø 228 Width [mm] 42 + HEB Ø 228 Width [mm] 42 + RZ / + Zub TopKit
ROVER - 25 I Hatchback (RF) 09/99→06/06								
Brake Shoe Set								
1.1 16V 1.4 16V 1.6 16V 1.8 16V 2.0 iDT	55 62 - 76 80 85 - 107 74 - 83	01/04→05/05 10/99→05/05 10/99→05/05 10/99→05/05 10/99→05/05	→			**03.0137-0339.2**	**650339**	Ø 203 Width [mm] 38
ROVER - 45 I Hatchback (RT) 02/00→05/05								
Brake Shoe Set								
1.4 1.6 1.8 2.0 iDT 2.0 V6	76 80 86 74 - 83 110	02/00→05/05 02/00→05/05 02/00→05/05 02/00→05/05 02/00→05/05	→			**03.0137-0339.2**	**650339**	Ø 203 Width [mm] 38
ROVER - 45 I Saloon (RT) 02/00→05/05								
Brake Shoe Set								
1.4 1.6 1.8 2.0 iDT 2.0 V6	76 80 86 74 - 83 110	02/00→05/05 02/00→05/05 02/00→05/05 02/00→05/05 02/00→05/05	→			**03.0137-0339.2**	**650339**	Ø 203 Width [mm] 38
ROVER - 75 (RJ) 02/99→10/05								
Guide Bolt, brake caliper								
1.8 1.8 Turbo 2.0 CDT 2.0 CDTi 2.0 V6 2.5 V6	88 110 85 96 110 129 - 130	02/99→05/05 05/03→05/05 02/99→05/05 02/03→05/05 02/99→05/05 02/99→05/05			2	**11.8171-0008.1**	**990049**	ATE
ROVER - 75 I Tourer (RJ) 08/01→06/06								
Guide Bolt, brake caliper								
1.8 1.8 Turbo	88 110	08/01→05/05 05/03→05/05			2	**11.8171-0008.1**	**990049**	ATE

	kW				! #			
ROVER - 75 I Tourer (RJ) 08/01→06/06								
Guide Bolt, brake caliper								
2.0 CDT 2.0 CDTi 2.0 V6 2.5 V6	85 96 110 130	08/01→05/05 02/03→05/05 08/01→05/05 08/01→05/05			2	**11.8171-0008.1**	**990049**	ATE
ROVER - 200 II Convertible (XW) 04/90→11/99								
Brake Shoe Set								
214 1.4 216 1.6i	66 90	01/92→11/99 01/92→11/99	➡	→ 10/95; - ABS		**03.0137-0339.2**	**650339**	Ø 203 Width [mm] 38
ROVER - 200 II Hatchback (RF) 11/95→11/00								
Brake Shoe Set								
211 214 Si 218 Si	44 76 88	01/98→03/00 11/95→03/00 08/99→03/00	➡	- ABS		**03.0137-0339.2**	**650339**	Ø 203 Width [mm] 38
214 i 216 Si 220 D/SD 220 SDi	55 82 63 77	11/95→03/00 11/95→06/99 11/95→03/00 11/95→03/00	➡	01/96→; - ABS		**03.0137-0339.2**	**650339**	Ø 203 Width [mm] 38
218 K Vi	107	11/95→03/00	➡	01/97→; - ABS		**03.0137-0339.2**	**650339**	Ø 203 Width [mm] 38
ROVER - 200 II Hatchback (XW) 10/89→12/95								
Brake Shoe Set								
214 214 GSi/Si 214 Si/Gsi 218 D	55 76 66 52	09/93→12/95 12/92→10/95 10/89→10/95 09/91→10/95	➡	- ABS		**03.0137-0339.2**	**650339**	Ø 203 Width [mm] 38
216 GSi	82 - 85	10/89→12/95	➡	01/91→; - ABS		**03.0137-0339.2**	**650339**	Ø 203 Width [mm] 38
ROVER - 200 Coupe (XW) 10/92→06/99								
Brake Shoe Set								
216	82	01/96→12/97	➡	- ABS		**03.0137-0339.2**	**650339**	Ø 203 Width [mm] 38
ROVER - 400 II (RT) 03/95→03/00								
Brake Shoe Set								
414 414 Si 420 D 420 Di 420 Si Lux	55 76 63 77 100	03/96→12/99 05/95→03/00 11/95→03/00 05/95→03/00 12/95→03/00	➡			**03.0137-0339.2**	**650339**	Ø 203 Width [mm] 38
416 Si	82 - 85	03/95→03/00	➡	06/95→		**03.0137-0339.2**	**650339**	Ø 203 Width [mm] 38
ROVER - 400 II (XW) 04/90→04/95								
Brake Shoe Set								
414 416 GSI 416 GSI/GSE 416 GTI 416 GTI/GTE 418 D	70 82 85 90 96 49	01/93→04/95 04/90→04/95 04/90→04/95 04/90→04/95 04/90→04/95 09/91→04/95	➡	- ABS		**03.0137-0339.2**	**650339**	Ø 203 Width [mm] 38
ROVER - 400 II Hatchback (RT) 05/95→03/00								
Brake Shoe Set								
414 414 Si 416 Si 420 D 420 Di 420 Si Lux	55 76 83 - 85 63 77 100	03/96→12/97 05/95→03/00 06/95→03/00 11/95→03/00 05/95→03/00 12/95→03/00	➡			**03.0137-0339.2**	**650339**	Ø 203 Width [mm] 38
416 Si	82	05/95→03/00	➡	06/95→		**03.0137-0339.2**	**650339**	Ø 203 Width [mm] 38
ROVER - 400 Tourer (XW) 09/93→11/98								
Brake Shoe Set								
1.6 i	82 - 90	05/94→11/98	➡	→ 04/95; - ABS		**03.0137-0339.2**	**650339**	Ø 203 Width [mm] 38

© 2022 Continental Aftermarket & Services GmbH

	kW				! #			
ROVER - 600 I (RH) 08/93→10/00								
Brake Pad Set, disc brake								
618 i/Si 620 i 620 Sdi 620 Si 620 Ti Vitesse 623 Si	85 85 77 96 147 116	03/96→02/99 08/93→06/96 05/94→06/99 08/93→02/99 05/94→08/98 08/93→06/99				**13.0460-5929.2**	**605929**	AKE 21719 15,0 + WK
ROVER - COUPE 03/96→11/99								
Brake Shoe Set								
1.8 16 V	107	03/96→11/99		01/97→; - ABS		**03.0137-0339.2**	**650339**	Ø 203 Width [mm] 38
SAAB - 9-3 (YS3D) 02/98→08/03								
Guide Bolt, brake caliper								
2.0 i 2.0 SE Turbo 2.0 Turbo 2.2 TiD 2.3 i	96 147 113 - 136 85 110	02/98→09/02 02/98→09/02 02/98→09/02 02/98→11/00 02/98→09/02		X7020001→	2	**11.8171-0008.1**	**990049**	ATE
				01/99→	2	**11.8171-0008.1**	**990049**	ATE
				→ 12/98	2	**11.8171-0008.1**	**990049**	ATE
				→ X7020000	2	**11.8171-0008.1**	**990049**	ATE
				→ X2020000	2	**11.8171-0008.1**	**990049**	ATE
				X2020001→	2	**11.8171-0008.1**	**990049**	ATE
2.0 Turbo	110	03/99→09/02			2	**11.8171-0008.1**	**990049**	ATE
				X2020001→	2	**11.8171-0008.1**	**990049**	ATE
				X7020001→	2	**11.8171-0008.1**	**990049**	ATE
2.0 Turbo 2.2 TiD 2.3 2.3 Turbo	151 92 169 165	10/99→09/02 11/00→09/02 09/99→01/02 10/98→09/02			2	**11.8171-0008.1**	**990049**	ATE
SAAB - 9-3 (YS3F, E79, D79, D75) 09/02→02/15								
Spring, brake caliper								
1 8t 1.9 TiD 2.0 t 2.0 t BioPower 2.2 TiD	110 110 88 - 110 129 154 92	09/02→02/15 09/02→02/15 09/04→02/15 09/02→02/15 09/02→02/15 09/02→02/15		51046734→; → 12/05	2	**11.8116-0356.1**	**390586**	ATE
				→ 06/12; Rim Size [in]: 15; GG	2	**11.8116-0356.1**	**390586**	ATE
1 8t BioPower 1.9 TTiD 2.0 t 2.0 t BioPower 2.0 t Bio Power 2.0 Turbo Performance	110 110 96 - 132 120 - 177 147 162 185	01/07→02/15 01/07→02/15 12/07→02/15 01/07→02/15 05/09→02/15 01/11→02/15 04/04→02/15		→ 06/12; Rim Size [in]: 15; GG	2	**11.8116-0356.1**	**390586**	ATE
1 8t BioPower	129 129	05/09→02/15 05/09→02/15		→ 06/12; Rim Size [in]: 15	2	**11.8116-0356.1**	**390586**	ATE
1.8 i	90	01/04→02/15		51046734→; → 12/05	2	**11.8116-0356.1**	**390586**	ATE
				03/04→ 06/12; Rim Size [in]: 15; GG	2	**11.8116-0356.1**	**390586**	ATE
2.0 t	154	09/02→02/15		51046734→; → 12/05	2	**11.8116-0356.1**	**390586**	ATE
2.8 Turbo V6	184	03/05→02/15		→ 12/05	2	**11.8116-0356.1**	**390586**	ATE
Guide Bolt, brake caliper								
1 8t 2.2 TiD	110 110 92	09/02→02/15 09/02→02/15 09/02→02/15		→ 06/12	2	**11.8171-0008.1**	**990049**	ATE
				→ 06/12; Rim Size [in]: 15	2	**11.8171-0008.1**	**990049**	ATE
				01/06→ 06/12	2	**11.8171-0008.1**	**990049**	ATE
				→ 51049406	2	**11.8171-0008.1**	**990049**	ATE
				51046734→; → 12/05	2	**11.8171-0008.1**	**990049**	ATE
				51049407→; → 06/12	2	**11.8171-0008.1**	**990049**	ATE
1 8t BioPower 2.0 t 2.0 t Bio Power	110 110 120 - 162 162	01/07→02/15 01/07→02/15 01/07→02/15 01/11→02/15		→ 06/12	2	**11.8171-0008.1**	**990049**	ATE
				→ 06/12; Rim Size [in]: 15	2	**11.8171-0008.1**	**990049**	ATE
				→ 51049406	2	**11.8171-0008.1**	**990049**	ATE
				51049407→; → 06/12	2	**11.8171-0008.1**	**990049**	ATE
1 8t BioPower 1.9 TTiD	129 129 96 - 132	05/09→02/15 05/09→02/15 12/07→02/15		→ 06/12; Rim Size [in]: 15	2	**11.8171-0008.1**	**990049**	ATE
				→ 06/12	2	**11.8171-0008.1**	**990049**	ATE
1.8 i	90	01/04→02/15		01/06→ 06/12	2	**11.8171-0008.1**	**990049**	ATE
				03/04→ 06/12; Rim Size [in]: 15	2	**11.8171-0008.1**	**990049**	ATE

	kW				! #			
SAAB - 9-3 (YS3F, E79, D79, D75) 09/02→02/15								
Guide Bolt, brake caliper								
1.8 i	90	01/04→02/15		51046734→; → 12/05	2	**11.8171-0008.1**	**990049**	ATE
				03/04→ 06/12	2	**11.8171-0008.1**	**990049**	ATE
1.9 TiD	88 - 110	09/04→02/15		→ 06/12; Rim Size [in]: 15	2	**11.8171-0008.1**	**990049**	ATE
				01/06→ 06/12	2	**11.8171-0008.1**	**990049**	ATE
				51046734→; → 12/05	2	**11.8171-0008.1**	**990049**	ATE
				→ 06/12	2	**11.8171-0008.1**	**990049**	ATE
2.0 t 2.0 t BioPower	129 154	09/02→02/15 09/02→02/15		→ 06/12	2	**11.8171-0008.1**	**990049**	ATE
				→ 06/12; Rim Size [in]: 15	2	**11.8171-0008.1**	**990049**	ATE
				01/06→ 06/12	2	**11.8171-0008.1**	**990049**	ATE
				51049407→; → 06/12	2	**11.8171-0008.1**	**990049**	ATE
				→ 51049406	2	**11.8171-0008.1**	**990049**	ATE
				51046734→; → 12/05	2	**11.8171-0008.1**	**990049**	ATE
				09/03→; → 51049406	2	**11.8171-0008.1**	**990049**	ATE
2.0 t	154	09/02→02/15		51046734→; → 12/05	2	**11.8171-0008.1**	**990049**	ATE
				51049407→; → 06/12	2	**11.8171-0008.1**	**990049**	ATE
				01/06→ 06/12	2	**11.8171-0008.1**	**990049**	ATE
				→ 06/12	2	**11.8171-0008.1**	**990049**	ATE
				41022028→ 51046733	2	**11.8171-0008.1**	**990049**	ATE
				41039808→ 51046733	2	**11.8171-0008.1**	**990049**	ATE
				→ 51049406	2	**11.8171-0008.1**	**990049**	ATE
				→ 41039807	2	**11.8171-0008.1**	**990049**	ATE
2.0 t 2.0 t BioPower 2.0 Turbo Performance	177 147 185	05/09→02/15 05/09→02/15 04/04→02/15		→ 06/12	2	**11.8171-0008.1**	**990049**	ATE
				→ 06/12; Rim Size [in]: 15	2	**11.8171-0008.1**	**990049**	ATE
				51049407→; → 06/12	2	**11.8171-0008.1**	**990049**	ATE
				→ 51046733	2	**11.8171-0008.1**	**990049**	ATE
				→ 51049406	2	**11.8171-0008.1**	**990049**	ATE
2.0 T16	143	06/06→02/15		→ 51049406	2	**11.8171-0008.1**	**990049**	ATE
2.0 t BioPower	129 - 145	01/07→02/15		→ 06/12	2	**11.8171-0008.1**	**990049**	ATE
				51049407→; → 06/12	2	**11.8171-0008.1**	**990049**	ATE
2.0 t Bio Power 2.0 t BioPower XWD 2.0 t XWD	120 120 - 162 120 - 177	01/07→02/15 01/08→02/15 01/07→02/15		→ 51049406	2	**11.8171-0008.1**	**990049**	ATE
2.0 Turbo XWD	154	01/08→02/15		→ 41039807	2	**11.8171-0008.1**	**990049**	ATE
				51049407→; → 06/12	2	**11.8171-0008.1**	**990049**	ATE
				→ 06/12	2	**11.8171-0008.1**	**990049**	ATE
				41022028→ 51046733	2	**11.8171-0008.1**	**990049**	ATE
				41039808→ 51046733	2	**11.8171-0008.1**	**990049**	ATE
				→ 51049406	2	**11.8171-0008.1**	**990049**	ATE
2.8 Turbo V6	169 - 188	03/05→02/15		04/08→ 06/12	2	**11.8171-0008.1**	**990049**	ATE
2.8 Turbo V6	184	03/05→02/15		01/06→ 06/12	2	**11.8171-0008.1**	**990049**	ATE
				→ 06/12	2	**11.8171-0008.1**	**990049**	ATE
				→ 12/05	2	**11.8171-0008.1**	**990049**	ATE
2.8 Turbo V6	203 - 206	04/08→02/15		→ 06/12	2	**11.8171-0008.1**	**990049**	ATE
2.8 Turbo V6 XWD	206	05/08→12/11			2	**11.8171-0008.1**	**990049**	ATE
SAAB - 9-3 Cabriolet (YS3D) 02/98→08/03								
Guide Bolt, brake caliper								
2.0 i 2.0 SE Turbo 2.0 Turbo	96 147 113 - 136	02/98→08/03 02/98→08/03 02/98→08/03		→ 07/03; X7020001→	2	**11.8171-0008.1**	**990049**	ATE
				→ 12/98	2	**11.8171-0008.1**	**990049**	ATE
				01/99→ 07/03	2	**11.8171-0008.1**	**990049**	ATE
2.3 i	110	02/98→08/03		→ X2020000	2	**11.8171-0008.1**	**990049**	ATE
				→ X7020000	2	**11.8171-0008.1**	**990049**	ATE
				→ 07/03; X2020001→	2	**11.8171-0008.1**	**990049**	ATE
2.0 Turbo	110 - 151	10/99→08/03		→ 07/03	2	**11.8171-0008.1**	**990049**	ATE
2.3 Turbo	165	10/99→08/03						
2.3	169	09/99→01/02		10/99→	2	**11.8171-0008.1**	**990049**	ATE
SAAB - 9-3 Convertible (YS3F) 08/03→02/15								
Spring, brake caliper								
1	110	08/03→02/15	←	51046734→; → 06/12	2	**11.8116-0356.1**	**390586**	ATE

© 2022 Continental Aftermarket & Services GmbH

	kW				! #			
SAAB - 9-3 Convertible (YS3F) 08/03→02/15								
Spring, brake caliper								
8t 8t BioPower 2.0 t 2.0 t BioPower 2.0 Turbo Performance	110 110 120 - 162 120 - 162 185	08/03→02/15 01/07→02/15 08/03→02/15 01/11→02/15 04/04→02/15	←	→ 06/12; Rim Size [in]: 15; GG	2	**11.8116-0356.1**	**390586**	ATE
1.8 i	90	01/04→02/15	←	→ 06/12; Rim Size [in]: 15	2	**11.8116-0356.1**	**390586**	ATE
			←	51046734→; → 06/12	2	**11.8116-0356.1**	**390586**	ATE
1.9 TiD	88	09/04→02/15	←	→ 06/12; Rim Size [in]: 15	2	**11.8116-0356.1**	**390586**	ATE
			←	→ 06/12	2	**11.8116-0356.1**	**390586**	ATE
1.9 TiD 1.9 TTiD	110 96 - 132	01/06→02/15 12/07→02/15	←	→ 06/12	2	**11.8116-0356.1**	**390586**	ATE
			←	→ 06/12; Rim Size [in]: 15; GG	2	**11.8116-0356.1**	**390586**	ATE
2.0	130 - 143	09/04→09/07	←	51046734→	2	**11.8116-0356.1**	**390586**	ATE
			←	Rim Size [in]: 15; GG	2	**11.8116-0356.1**	**390586**	ATE
2.0 t	129	08/03→02/15	←	→ 06/12; Rim Size [in]: 15	2	**11.8116-0356.1**	**390586**	ATE
			←	51046734→; → 06/12	2	**11.8116-0356.1**	**390586**	ATE
			←	→ 06/12; Rim Size [in]: 15; GG	2	**11.8116-0356.1**	**390586**	ATE
2.0 t BioPower	129	01/07→02/15	←	51046734→; → 06/12	2	**11.8116-0356.1**	**390586**	ATE
			←	→ 06/12; Rim Size [in]: 15; GG	2	**11.8116-0356.1**	**390586**	ATE
			←	07/07→ 06/12; Rim Size [in]: 15; GG	2	**11.8116-0356.1**	**390586**	ATE
2.0 t BioPower 2.0 T BioPower	147 145	06/07→02/15 06/07→02/15	←	51046734→; → 06/12	2	**11.8116-0356.1**	**390586**	ATE
			←	07/07→ 06/12; Rim Size [in]: 15; GG	2	**11.8116-0356.1**	**390586**	ATE
Guide Bolt, brake caliper								
1 8t 8t BioPower 1.8 i 2.0 t 2.0 t BioPower	110 110 110 90 120 - 162 120 - 162	08/03→02/15 08/03→02/15 01/07→02/15 01/04→02/15 01/11→02/15 01/11→02/15		→ 06/12	2	**11.8171-0008.1**	**990049**	ATE
				→ 06/12; Rim Size [in]: 15	2	**11.8171-0008.1**	**990049**	ATE
				→ 51046733	2	**11.8171-0008.1**	**990049**	ATE
				51046734→; → 06/12	2	**11.8171-0008.1**	**990049**	ATE
1.9 TiD 1.9 TTiD	88 - 110 96 - 132	09/04→02/15 12/07→02/15		→ 06/12; Rim Size [in]: 15	2	**11.8171-0008.1**	**990049**	ATE
				→ 06/12	2	**11.8171-0008.1**	**990049**	ATE
2.0	130 - 143	09/04→09/07			2	**11.8171-0008.1**	**990049**	ATE
				Rim Size [in]: 15	2	**11.8171-0008.1**	**990049**	ATE
				→ 51046733	2	**11.8171-0008.1**	**990049**	ATE
				51046734→	2	**11.8171-0008.1**	**990049**	ATE
2.0 t 2.0 Turbo Performance	129 185	08/03→02/15 04/04→02/15		51049407→; → 06/12	2	**11.8171-0008.1**	**990049**	ATE
				→ 06/12	2	**11.8171-0008.1**	**990049**	ATE
				→ 06/12; Rim Size [in]: 15	2	**11.8171-0008.1**	**990049**	ATE
				→ 51046733	2	**11.8171-0008.1**	**990049**	ATE
				→ 51049406	2	**11.8171-0008.1**	**990049**	ATE
				51046734→; → 06/12	2	**11.8171-0008.1**	**990049**	ATE
2.0 t	154	08/03→02/15		51049407→; → 06/12	2	**11.8171-0008.1**	**990049**	ATE
				51046734→; → 06/12	2	**11.8171-0008.1**	**990049**	ATE
				→ 06/12; Rim Size [in]: 15	2	**11.8171-0008.1**	**990049**	ATE
				→ 06/12	2	**11.8171-0008.1**	**990049**	ATE
				→ 41022027	2	**11.8171-0008.1**	**990049**	ATE
				41022028→ 51046733	2	**11.8171-0008.1**	**990049**	ATE
				→ 51046733	2	**11.8171-0008.1**	**990049**	ATE
				→ 51049406	2	**11.8171-0008.1**	**990049**	ATE
2.0 t BioPower	129	01/07→02/15		→ 06/12; Rim Size [in]: 15	2	**11.8171-0008.1**	**990049**	ATE
				07/07→ 06/12	2	**11.8171-0008.1**	**990049**	ATE
				07/07→ 06/12; Rim Size [in]: 15	2	**11.8171-0008.1**	**990049**	ATE
				→ 06/12	2	**11.8171-0008.1**	**990049**	ATE
				→ 51046733	2	**11.8171-0008.1**	**990049**	ATE
				07/07→; → 51046733	2	**11.8171-0008.1**	**990049**	ATE
				51046734→; → 06/12	2	**11.8171-0008.1**	**990049**	ATE
2.0 t BioPower 2.0 T BioPower	147 145	06/07→02/15 06/07→02/15		07/07→ 06/12	2	**11.8171-0008.1**	**990049**	ATE
				07/07→ 06/12; Rim Size [in]: 15	2	**11.8171-0008.1**	**990049**	ATE

	kW				! #			
SAAB - 9-3 Convertible (YS3F) 08/03→02/15								
Guide Bolt, brake caliper								
2.0 t BioPower 2.0 T BioPower	147 145	06/07→02/15 06/07→02/15		51046734→; → 06/12 07/07→; → 51046733	2 2	**11.8171-0008.1** **11.8171-0008.1**	**990049** **990049**	ATE ATE
2.8 Turbo V6	169	02/06→02/15		06/08→ 06/12	2	**11.8171-0008.1**	**990049**	ATE
2.8 Turbo V6	184 - 206	02/06→02/15		→ 06/12	2	**11.8171-0008.1**	**990049**	ATE
SAAB - 9-3 Estate (E50) 03/05→02/15								
Spring, brake caliper								
1.8 i 1.8 t 1.8t 2.0 1.9 TiD 1.9 TTiD 2.0 t 2.0 T16 2.0 t BioPower 2.0 t Bio Power 2.0 t BioPower XWD 2.0 t Bio Power XWD 2.0 t XWD	90 110 110 88 - 110 96 - 132 110 - 129 143 110 - 162 147 120 - 162 154 120 - 162	03/05→02/15 03/05→02/15 03/05→02/15 03/05→02/15 12/07→02/15 03/05→02/15 04/06→02/15 01/07→02/15 02/09→02/15 01/07→02/15 06/08→02/15 01/07→02/15	←	→ 06/12; Rim Size [in]: 15	2	**11.8116-0356.1**	**390586**	ATE
2.0 t 2.8 Turbo V6	154 169 - 184	03/05→02/15 03/05→02/15	←	→ 12/05	2	**11.8116-0356.1**	**390586**	ATE
Guide Bolt, brake caliper								
1.8 i 1.8 t 1.8t 2.0 1.9 TiD 2.0 t 2.0 T16 2.0 t BioPower 2.0 t Bio Power 2.0 t BioPower XWD 2.0 t Bio Power XWD 2.0 t XWD	90 110 110 88 - 110 110 - 129 143 110 - 145 147 120 - 162 154 120 - 162	03/05→02/15 03/05→02/15 03/05→02/15 03/05→02/15 03/05→02/15 04/06→02/15 01/07→02/15 02/09→02/15 01/07→02/15 06/08→02/15 01/07→02/15	 ← →	→ 06/12 → 06/12; Rim Size [in]: 15 → 06/12	2 2 2	**11.8171-0008.1** **11.8171-0008.1** **11.8171-0008.1**	**990049** **990049** **990049**	ATE ATE ATE
1.9 TTiD	96 - 132	12/07→02/15		→ 06/12	2	**11.8171-0008.1**	**990049**	ATE
			←	→ 06/12; Rim Size [in]: 15	2	**11.8171-0008.1**	**990049**	ATE
			←	→ 06/12	2	**11.8171-0008.1**	**990049**	ATE
			→	→ 06/12	2	**11.8171-0008.1**	**990049**	ATE
2.0 t 2.0 t XWD 2.8 Turbo V6	147 - 177 177 188 - 206	02/09→02/15 05/09→02/15 12/07→02/15	← → →	→ 06/12 93171501→; → 06/12 → 93171500	2 2 2	**11.8171-0008.1** **11.8171-0008.1** **11.8171-0008.1**	**990049** **990049** **990049**	ATE ATE ATE
2.0 t 2.8 Turbo V6	154 169 - 184	03/05→02/15 03/05→02/15	←	→ 12/05	2	**11.8171-0008.1**	**990049**	ATE
			←	01/06→ 06/12	2	**11.8171-0008.1**	**990049**	ATE
			→	→ 93171500	2	**11.8171-0008.1**	**990049**	ATE
			→	93171501→; → 06/12	2	**11.8171-0008.1**	**990049**	ATE
2.0 t BioPower	162	01/11→02/15	←	→ 06/12; Rim Size [in]: 15	2	**11.8171-0008.1**	**990049**	ATE
			→	→ 06/12	2	**11.8171-0008.1**	**990049**	ATE
2.0 t XWD	154	06/08→02/15	←	07/08→ 06/12	2	**11.8171-0008.1**	**990049**	ATE
			→	93171501→; → 06/12	2	**11.8171-0008.1**	**990049**	ATE
			→	07/08→; → 93171500	2	**11.8171-0008.1**	**990049**	ATE
2.8 Turbo V6 XWD	206	05/08→12/11	←		2	**11.8171-0008.1**	**990049**	ATE
			→	93171501→	2	**11.8171-0008.1**	**990049**	ATE
			→	→ 93171500	2	**11.8171-0008.1**	**990049**	ATE

© 2022 Continental Aftermarket & Services GmbH

	kW				! #			
SAAB - 9-3X (YS3) 02/09→02/15								
Spring, brake caliper								
1.9 TTiD AWD 2.0 t BioPower XWD 2.0 t XWD	132 154 154	02/09→12/12 02/09→12/12 02/09→02/15		03/09→ 06/12	2	**11.8116-0356.1**	**390586**	ATE
				03/09→ 06/12; Rim Size [in]: 15; GG	2	**11.8116-0356.1**	**390586**	ATE
2.0 T16 XWD 2.0 t BioPower XWD	162 162	01/11→02/15 01/11→12/12		→ 06/12; Rim Size [in]: 15	2	**11.8116-0356.1**	**390586**	ATE
				→ 06/12	2	**11.8116-0356.1**	**390586**	ATE
Guide Bolt, brake caliper								
1.9 TTiD AWD 2.0 t BioPower XWD 2.0 t XWD	132 154 154	02/09→12/12 02/09→12/12 02/09→02/15		03/09→ 06/12; Rim Size [in]: 15	2	**11.8171-0008.1**	**990049**	ATE
				03/09→ 06/12	2	**11.8171-0008.1**	**990049**	ATE
2.0 T16 XWD 2.0 t BioPower XWD	162 162	01/11→02/15 01/11→12/12		→ 06/12; Rim Size [in]: 15	2	**11.8171-0008.1**	**990049**	ATE
				→ 06/12	2	**11.8171-0008.1**	**990049**	ATE
SAAB - 9-5 (YS3E) 09/97→12/09								
Guide Bolt, brake caliper								
1.9 TiD 2.2 TiD 2.3 Turbo	110 88 169 - 191	01/06→12/09 03/02→12/09 10/99→12/09			2	**11.8171-0008.1**	**990049**	ATE
2.0 t 2.3 t	110 125	09/97→12/09 09/97→12/09		01/02→	2	**11.8171-0008.1**	**990049**	ATE
				→ 12/98	2	**11.8171-0008.1**	**990049**	ATE
				01/99→ 12/01	2	**11.8171-0008.1**	**990049**	ATE
				→ X3020000	2	**11.8171-0008.1**	**990049**	ATE
				→ 12/01; X3020001→	2	**11.8171-0008.1**	**990049**	ATE
				X3025752→	2	**11.8171-0008.1**	**990049**	ATE
2.0 t	136	07/00→12/09			2	**11.8171-0008.1**	**990049**	ATE
				→ 12/01	2	**11.8171-0008.1**	**990049**	ATE
				→ 12/01; X3020001→	2	**11.8171-0008.1**	**990049**	ATE
				X3025752→	2	**11.8171-0008.1**	**990049**	ATE
2.0 t Biopower	132	09/05→12/09		06/06→	2	**11.8171-0008.1**	**990049**	ATE
				X3025752→	2	**11.8171-0008.1**	**990049**	ATE
2.0 t BioPower 2.3 t BioPower 2.3 Turbo	110 136 - 152 134	01/05→12/09 11/06→12/09 04/08→12/09			2	**11.8171-0008.1**	**990049**	ATE
				X3025752→	2	**11.8171-0008.1**	**990049**	ATE
2.0 Turbo SE	141	10/98→07/00		01/99→	2	**11.8171-0008.1**	**990049**	ATE
				01/00→	2	**11.8171-0008.1**	**990049**	ATE
				→ 12/98	2	**11.8171-0008.1**	**990049**	ATE
				→ X3020000	2	**11.8171-0008.1**	**990049**	ATE
				X3025752→	2	**11.8171-0008.1**	**990049**	ATE
				X3020001→	2	**11.8171-0008.1**	**990049**	ATE
2.3 t	136	01/01→12/09		01/02→	2	**11.8171-0008.1**	**990049**	ATE
				→ 12/01	2	**11.8171-0008.1**	**990049**	ATE
				→ 12/01; X3020001→	2	**11.8171-0008.1**	**990049**	ATE
					2	**11.8171-0008.1**	**990049**	ATE
2.3 Turbo	162	07/03→12/09			2	**11.8171-0008.1**	**990049**	ATE
				43510123→	2	**11.8171-0008.1**	**990049**	ATE
2.3 Turbo	184	09/01→12/09		01/02→	2	**11.8171-0008.1**	**990049**	ATE
				→ 12/01	2	**11.8171-0008.1**	**990049**	ATE
				01/02→; → 53500056	2	**11.8171-0008.1**	**990049**	ATE
				53500057→	2	**11.8171-0008.1**	**990049**	ATE
2.3 Turbo	224	06/03→08/05		→ 03/04	2	**11.8171-0008.1**	**990049**	ATE
					2	**11.8171-0008.1**	**990049**	ATE
3.0 TiD	130	07/01→12/09		→ 12/01	2	**11.8171-0008.1**	**990049**	ATE
				01/02→	2	**11.8171-0008.1**	**990049**	ATE
3.0 V6t	147	01/98→12/09		→ 12/01	2	**11.8171-0008.1**	**990049**	ATE
				01/02→	2	**11.8171-0008.1**	**990049**	ATE
				→ 12/01; X3025752→	2	**11.8171-0008.1**	**990049**	ATE
SAAB - 9-5 Estate (YS3E) 10/98→12/09								
Guide Bolt, brake caliper								
1.9 TiD 2.2 TiD 2.3 Turbo	110 - 129 88 169 - 224	01/06→12/09 03/02→12/09 10/99→12/09			2	**11.8171-0008.1**	**990049**	ATE

	kW				! #			
SAAB - 9-5 Estate (YS3E) 10/98→12/09								
Guide Bolt, brake caliper								
2.0 t 2.3 t	110 125	10/98→12/09 10/98→12/09		01/02→	2	**11.8171-0008.1**	**990049**	ATE
				→ 12/98	2	**11.8171-0008.1**	**990049**	ATE
				01/99→ 12/01	2	**11.8171-0008.1**	**990049**	ATE
				→ X3020000	2	**11.8171-0008.1**	**990049**	ATE
				→ 12/01; X3020001→	2	**11.8171-0008.1**	**990049**	ATE
				X3025752→	2	**11.8171-0008.1**	**990049**	ATE
2.0 t	136	07/00→07/01			2	**11.8171-0008.1**	**990049**	ATE
				X3020001→	2	**11.8171-0008.1**	**990049**	ATE
				→ X3020000	2	**11.8171-0008.1**	**990049**	ATE
2.0 t	141	10/98→07/00		01/99→	2	**11.8171-0008.1**	**990049**	ATE
				→ 12/98	2	**11.8171-0008.1**	**990049**	ATE
				X3020001→	2	**11.8171-0008.1**	**990049**	ATE
				→ X3020000	2	**11.8171-0008.1**	**990049**	ATE
				X3025752→	2	**11.8171-0008.1**	**990049**	ATE
2.0 t Biopower	132	09/05→12/09		06/06→	2	**11.8171-0008.1**	**990049**	ATE
				X3025752→	2	**11.8171-0008.1**	**990049**	ATE
2.0 t BioPower 2.3 t BioPower	110 136 - 152	01/06→12/09 11/06→12/09			2	**11.8171-0008.1**	**990049**	ATE
				X3025752→	2	**11.8171-0008.1**	**990049**	ATE
2.3 t	136	01/01→12/09		→ 12/01	2	**11.8171-0008.1**	**990049**	ATE
				01/02→	2	**11.8171-0008.1**	**990049**	ATE
					2	**11.8171-0008.1**	**990049**	ATE
2.3 t BioPower	154	11/06→12/09		01/07→	2	**11.8171-0008.1**	**990049**	ATE
				X3025752→	2	**11.8171-0008.1**	**990049**	ATE
2.3 Turbo	162	07/03→12/09			2	**11.8171-0008.1**	**990049**	ATE
				43510123→	2	**11.8171-0008.1**	**990049**	ATE
2.3 Turbo	184	09/01→12/09		01/02→	2	**11.8171-0008.1**	**990049**	ATE
				→ 12/01	2	**11.8171-0008.1**	**990049**	ATE
				01/02→; → 53500056	2	**11.8171-0008.1**	**990049**	ATE
				53500057→	2	**11.8171-0008.1**	**990049**	ATE
3.0 TiD	130	07/01→12/09		→ 12/01	2	**11.8171-0008.1**	**990049**	ATE
				01/02→	2	**11.8171-0008.1**	**990049**	ATE
3.0 V6t	147	10/98→12/09		→ 12/01	2	**11.8171-0008.1**	**990049**	ATE
				01/02→	2	**11.8171-0008.1**	**990049**	ATE
				→ 12/01; X3025752→	2	**11.8171-0008.1**	**990049**	ATE
SAAB - 900 I (AC4, AM4) 01/79→12/93								
Guide Bolt, brake caliper								
2.0 -16 2.0 S Turbo-16 2.0 Turbo-16 S Cat	93 104 - 107 129	01/89→12/93 07/91→12/93 01/89→12/93	➡	→ 08/93	2	**11.8171-0008.1**	**990049**	ATE
2.0 c 2.0 i 2.0 Turbo 2.0 Turbo-16 S	74 81 - 85 103 - 110 129	07/82→12/88 11/80→08/90 01/86→12/91 01/84→12/88	➡	09/87→	2	**11.8171-0008.1**	**990049**	ATE
2.0 Turbo-16	118	11/85→12/93	➡	09/87→ 08/93	2	**11.8171-0008.1**	**990049**	ATE
2.1 -16	100	08/90→12/93	➡	09/90→ 12/91	2	**11.8171-0008.1**	**990049**	ATE
SAAB - 900 I Combi Coupe 06/78→06/94								
Guide Bolt, brake caliper								
2.0 -16 2.0 S Turbo-16	93 104	01/89→08/92 09/91→07/93	➡		2	**11.8171-0008.1**	**990049**	ATE
2.0 -16 2.0 Turbo-16 2.0 Turbo-16 S Cat	107 132 125	05/91→10/93 01/93→06/94 01/89→12/93	➡	→ 08/93	2	**11.8171-0008.1**	**990049**	ATE
2.0 c 2.0 i 2.0 Turbo 2.0 Turbo-16 S	74 81 - 85 103 - 110 129	09/79→12/88 11/80→08/90 01/86→12/91 02/84→12/88	➡	09/87→	2	**11.8171-0008.1**	**990049**	ATE
2.0 Turbo-16	118	11/85→06/94	➡	09/87→ 08/93	2	**11.8171-0008.1**	**990049**	ATE
2.1 -16	100	09/90→07/93	➡	→ 12/91	2	**11.8171-0008.1**	**990049**	ATE

© 2022 Continental Aftermarket & Services GmbH

	kW				! #			
SAAB - 900 I Convertible 10/85→12/94								
Guide Bolt, brake caliper								
2.0 2.0 -16 2.0 S Turbo-16	107 93 104	05/91→10/93 01/90→06/94 09/91→06/94	➡	→ 08/93	2	**11.8171-0008.1**	**990049**	ATE
2.0 16v	98	04/90→12/90	➡		2	**11.8171-0008.1**	**990049**	ATE
2.0 Turbo-16 2.0 Turbo-16 S	118 129	11/86→06/94 11/86→06/94	➡	09/87→ 08/93	2	**11.8171-0008.1**	**990049**	ATE
2.1 -16	100	08/90→06/94	➡	09/90→ 12/91	2	**11.8171-0008.1**	**990049**	ATE
SAAB - 900 II 07/93→04/99								
Guide Bolt, brake caliper								
2.0 -16 Turbo 2.3 -16 2.5 -24 V6	136 110 125	07/93→02/98 07/93→02/98 07/93→02/98		09/93→ 08/96	2	**11.8171-0008.1**	**990049**	ATE
				09/96→	2	**11.8171-0008.1**	**990049**	ATE
2.0 i	96	08/94→02/98		→ 08/96	2	**11.8171-0008.1**	**990049**	ATE
				09/96→	2	**11.8171-0008.1**	**990049**	ATE
2.0 i	98	07/93→07/94		09/93→	2	**11.8171-0008.1**	**990049**	ATE
SAAB - 900 II Convertible 09/93→04/99								
Guide Bolt, brake caliper								
2.0 -16 Turbo 2.0 i 2.3 -16 2.5 -24 V6	136 96 110 125	12/93→02/98 12/93→02/98 12/93→02/98 12/93→02/98		→ 08/96	2	**11.8171-0008.1**	**990049**	ATE
				09/96→	2	**11.8171-0008.1**	**990049**	ATE
SAAB - 900 II Coupe 12/93→04/99								
Guide Bolt, brake caliper								
2.0 -16 Turbo 2.0 i 2.3 -16 2.5 -24 V6	136 96 110 125	12/93→02/98 08/94→02/98 12/93→02/98 12/93→02/98		→ 08/96	2	**11.8171-0008.1**	**990049**	ATE
				09/96→	2	**11.8171-0008.1**	**990049**	ATE
2.0 i	98	12/93→07/94			2	**11.8171-0008.1**	**990049**	ATE
SAAB - 9000 04/85→12/98								
Guide Bolt, brake caliper								
2.0 -16	94	01/89→01/93	⬅	09/89→	2	**11.8171-0008.1**	**990049**	ATE
			➡		2	**11.8171-0008.1**	**990049**	ATE
2.0 -16 CD 2.3 -16 CDE 2.3 -16 CDE Eco-Power	96 - 110 108 125	09/93→12/98 09/93→12/98 09/93→12/98	⬅	→ 05/98	2	**11.8171-0008.1**	**990049**	ATE
			➡	→ 05/98	2	**11.8171-0008.1**	**990049**	ATE
2.0 -16 Turbo 2.0 -16 Turbo CD 2.3 -16 Turbo	118 120 143	05/88→08/93 09/88→08/93 09/90→12/98	⬅		2	**11.8171-0008.1**	**990049**	ATE
			➡		2	**11.8171-0008.1**	**990049**	ATE
2.0 -16 Turbo	127	03/90→09/93	⬅	09/93→	2	**11.8171-0008.1**	**990049**	ATE
			➡	09/93→	2	**11.8171-0008.1**	**990049**	ATE
2.0 -16 Turbo	129	04/85→12/91	⬅	09/87→	2	**11.8171-0008.1**	**990049**	ATE
			➡		2	**11.8171-0008.1**	**990049**	ATE
2.0 -16 Turbo CD	108 - 136	09/89→12/98	⬅	09/93→ 05/98	2	**11.8171-0008.1**	**990049**	ATE
			⬅	→ 08/93	2	**11.8171-0008.1**	**990049**	ATE
			➡	09/93→ 05/98	2	**11.8171-0008.1**	**990049**	ATE
			➡	→ 08/93	2	**11.8171-0008.1**	**990049**	ATE
2.3 -16 CD	107	08/89→12/98	⬅	09/89→ 08/93	2	**11.8171-0008.1**	**990049**	ATE
			➡	09/89→ 08/93	2	**11.8171-0008.1**	**990049**	ATE
2.3 -16 CD Turbo	147	07/90→12/98	⬅	09/93→ 05/98	2	**11.8171-0008.1**	**990049**	ATE
			➡	09/93→ 05/98	2	**11.8171-0008.1**	**990049**	ATE
3.0 -24 V6 CD/CDE	155	07/94→12/98	⬅	09/94→ 05/98	2	**11.8171-0008.1**	**990049**	ATE
			➡	09/94→ 05/98	2	**11.8171-0008.1**	**990049**	ATE
SAAB - 9000 Hatchback 09/84→12/98								
Guide Bolt, brake caliper								
2.0 -16	92 - 94	12/85→12/88	➡		2	**11.8171-0008.1**	**990049**	ATE
2.0 -16 CS	94	01/89→12/98	⬅	09/89→ 08/93	2	**11.8171-0008.1**	**990049**	ATE
			➡	→ 08/93	2	**11.8171-0008.1**	**990049**	ATE
2.0 -16 CS 2.0 -16 ND Turbo	96 110	09/93→12/98 09/93→12/98	⬅	→ 05/98	2	**11.8171-0008.1**	**990049**	ATE

	kW				! #			
SAAB - 9000 Hatchback 09/84→12/98								
Guide Bolt, brake caliper								
2.3 -16 CSE 2.3 -16 CSE Eco Power 2.3 -16 Turbo CSE	108 125 147	09/93→12/98 09/93→12/98 09/93→12/98	➡	→ 05/98	2	**11.8171-0008.1**	**990049**	ATE
2.0 -16 Turbo	118 - 129	09/84→08/93	⬅	09/87→	2	**11.8171-0008.1**	**990049**	ATE
			➡		2	**11.8171-0008.1**	**990049**	ATE
2.0 -16 Turbo	120 - 127	05/88→08/93	⬅		2	**11.8171-0008.1**	**990049**	ATE
			➡		2	**11.8171-0008.1**	**990049**	ATE
2.0 -16 Turbo CS	136	09/88→12/98	⬅	09/93→ 05/98	2	**11.8171-0008.1**	**990049**	ATE
			⬅	→ 08/93	2	**11.8171-0008.1**	**990049**	ATE
			➡	09/93→ 05/98	2	**11.8171-0008.1**	**990049**	ATE
			➡	→ 08/93	2	**11.8171-0008.1**	**990049**	ATE
2.3 -16 Aero CS	162 - 165	02/93→12/98	⬅	09/93→ 05/98	2	**11.8171-0008.1**	**990049**	ATE
2.3 -16 Turbo	143	09/90→12/98	➡	09/93→ 05/98	2	**11.8171-0008.1**	**990049**	ATE
2.3 -16 CS	107	09/89→12/98	⬅	→ 08/93	2	**11.8171-0008.1**	**990049**	ATE
			➡	→ 08/93	2	**11.8171-0008.1**	**990049**	ATE
3.0 -24 V6 CS/CSE	155	07/94→12/98	⬅	09/94→ 05/98	2	**11.8171-0008.1**	**990049**	ATE
			➡	09/94→ 05/98	2	**11.8171-0008.1**	**990049**	ATE
SEAT - ALHAMBRA (7V8, 7V9) 04/96→03/10								
Guide Bolt, brake caliper								
1.8 T 20V	110	10/97→03/10		05/98→; → 7M-1-530756	2	**11.8171-0008.1**	**990049**	ATE
1.9 TDI	66 - 85	04/96→03/10		→ 7M-1-530756	2	**11.8171-0008.1**	**990049**	ATE
2.0 i	85	04/96→03/10						
1.9 TDI	81	08/96→06/00		10/97→; → 7M-1-530756	2	**11.8171-0008.1**	**990049**	ATE
SEAT - ALHAMBRA (710, 711) 06/10→								
Brake Caliper								
1.4 TSI 2.0 TDI	110 85 - 125	06/10→ 06/10→	⬅	03/12→; +PR 1LW; ⊞		**24.3601-1727.5**	**240786**	TRW without holder
2.0 TDI 4Drive 2.0 TFSI	103 147	05/11→ 11/10→05/12	⬅	03/12→; +PR 1LW; ⊞		**24.3601-1728.5**	**240787**	TRW without holder
1.4 TSI 1.8 TSI 2.0 TDI	110 118 110 - 135	05/15→ 11/12→ 11/12→	⬅	+PR 1LW; ⊞		**24.3601-1727.5**	**240786**	TRW without holder
2.0 TDi 4Drive 2.0 TDI 4Drive	130 110 - 135	11/18→ 05/15→	⬅	+PR 1LW; ⊞		**24.3601-1728.5**	**240787**	TRW without holder
2.0 TSI	162	05/15→						
Guide Bolt, brake caliper								
1.4 TSI 1.8 TSI 2.0 TDI	110 118 85 - 130	06/10→ 11/12→ 06/10→		+PR 1LJ	2	**11.8171-0008.1**	**990049**	ATE
2.0 TDI 4Drive 2.0 TFSI	103 147	05/11→ 11/10→05/12						
Brake Disc								
1.4 TSI 2.0 TDI	110 85 - 130	06/10→ 06/10→	⬅	+PR 1LJ		**24.0125-0158.1**	**425158**	Ø 312 Brake Disc Thickness [mm] 25 Minimum thickness [mm] 22 Vented + S
2.0 TDI 4Drive 2.0 TFSI	103 147	05/11→ 11/10→05/12				**24.0325-0158.1**	**525158**	Ø 312 Brake Disc Thickness [mm] 25 Minimum thickness [mm] 22 Vented + S
			⬅	+PR 1LW		**24.0130-0220.1**	**430220**	Ø 314 Brake Disc Thickness [mm] 30 Minimum thickness [mm] 27 Vented + S
1.4 TSI 2.0 TDI	110 110 - 135	05/15→ 05/15→	⬅	+PR 1LW		**24.0130-0220.1**	**430220**	Ø 314 Brake Disc Thickness [mm] 30 Minimum thickness [mm] 27 Vented + S
2.0 TDi 4Drive 2.0 TDI 4Drive	130 110 - 135	11/18→ 05/15→	➡	+ eFSB		**24.0112-0210.1**	**412210**	Ø 300 Brake Disc Thickness [mm] 12 Minimum thickness [mm] 10 + S
2.0 TSI	162	05/15→						

© 2022 Continental Aftermarket & Services GmbH

	kW				! #			
SEAT - ALHAMBRA (710, 711) 06/10→								
Brake Disc								
1.8 TSI	118	11/12→	←	+PR 1LJ		**24.0125-0158.1**	**425158**	Ø 312 Brake Disc Thickness [mm] 25 Minimum thickness [mm] 22 Vented + S
			←	+PR 1LW		**24.0130-0220.1**	**430220**	Ø 314 Brake Disc Thickness [mm] 30 Minimum thickness [mm] 27 Vented + S
Sensor, wheel speed								
2.0 TDi 4Drive	130	11/18→	→	+PR 7X0 / 7X2 / 7X5 / 7Y8 / 7Y9; ◪		**24.0711-5401.3**	**360330**	
2.0 TDI 4Drive	103 - 135	05/11→	→	+PR 7X0 / 7X2 / 7X5 / 7Y8 / 7Y9; ◪		**24.0711-5402.3**	**360331**	
SEAT - ALHAMBRA VAN (711) 06/10→								
Brake Caliper								
TDI	110 - 135	05/15→	←	+PR 1LW; ◪		**24.3601-1727.5**	**240786**	TRW without holder
TDI 4Drive TSi	110 110	05/15→ 05/15→	←	+PR 1LW; ◪		**24.3601-1728.5**	**240787**	TRW without holder
Brake Disc								
TDI	110 - 135	05/15→	←	+PR 1LW		**24.0130-0220.1**	**430220**	Ø 314 Brake Disc Thickness [mm] 30 Minimum thickness [mm] 27 Vented + S
TDI 4Drive TSi	110 110	05/15→ 05/15→						
			→	+ eFSB		**24.0112-0210.1**	**412210**	Ø 300 Brake Disc Thickness [mm] 12 Minimum thickness [mm] 10 + S
Sensor, wheel speed								
TDI 4Drive	110	05/15→	→	+PR 7X0 / 7X2 / 7X5 / 7Y8 / 7Y9; ◪		**24.0711-5401.3**	**360330**	
			→	+PR 7X0 / 7X2 / 7X5 / 7Y8 / 7Y9; ◪		**24.0711-5402.3**	**360331**	
SEAT - ALTEA (5P1) 03/04→								
Guide Bolt, brake caliper								
1.2 TSI	77	04/10→		+PR 1ZE	2	**11.8171-0008.1**	**990049**	ATE
1.4 16V	63	05/06→		+PR 1ZA / 1LJ	2	**11.8171-0008.1**	**990049**	ATE
1.4 TSI	92	11/07→						
1.6	75	03/04→						
1.6 LPG	75	09/09→						
1.6 Multifuel	75	11/10→05/11						
1.6 TDI	66 - 77	10/09→						
1.8 TFSI	118	01/07→						
1.9 TDI	66 - 77	04/04→						
2.0 FSI	110	05/04→03/09						
2.0 TDI	100 - 125	03/04→						
2.0 TDI 16V	103	03/04→						
2.0 TDI 16V 4WD	103	10/10→						
2.0 TFSI	147	04/06→05/09						
Brake Disc								
1.2 TSI	77	04/10→	←	+PR 1ZE		**24.0125-0145.1**	**425145**	Ø 288 Brake Disc Thickness [mm] 25 Minimum thickness [mm] 22 Vented + S
1.4 16V	63	05/06→						
1.4 TSI	92	11/07→						
1.6	75	03/04→						
1.6 LPG	75	09/09→	←	+PR 1LJ / 1ZA		**24.0125-0158.1**	**425158**	Ø 312 Brake Disc Thickness [mm] 25 Minimum thickness [mm] 22 Vented + S
1.6 TDI	66 - 77	10/09→						
1.8 TFSI	118	01/07→						
1.9 TDI	66 - 77	04/04→				**24.0325-0158.1**	**525158**	Ø 312 Brake Disc Thickness [mm] 25 Minimum thickness [mm] 22 Vented + S
2.0 FSI	110	05/04→03/09						
2.0 TDI	100 - 125	03/04→						
2.0 TDI 16V	103	03/04→	→	+PR 1KS		**24.0110-0356.1**	**410356**	Ø 272 Brake Disc Thickness [mm] 9.7 Minimum thickness [mm] 8 + S
2.0 TFSI	147	04/06→05/09						
1.6 Multifuel	75	11/10→05/11	←	+PR 1ZE		**24.0125-0145.1**	**425145**	Ø 288 Brake Disc Thickness [mm] 25 Minimum thickness [mm] 22 Vented + S
2.0 TDI 16V 4WD	103	10/10→						

	kW				! #			
SEAT - ALTEA (5P1) 03/04→								
Brake Disc								
1.6 Multifuel 2.0 TDI 16V 4WD	75 103	11/10→05/11 10/10→	←	+PR 1LJ / 1ZA		**24.0125-0158.1**	**425158**	Ø 312 Brake Disc Thickness [mm] 25 Minimum thickness [mm] 22 Vented + S
			→	+PR 1KS		**24.0110-0356.1**	**410356**	Ø 272 Brake Disc Thickness [mm] 9.7 Minimum thickness [mm] 8 + S
Slave Cylinder, clutch								
1.6	75	03/04→		01/07→		**24.2519-1706.3**	**040096**	Ø 19
1.6 LPG	75	09/09→				**24.2519-1706.3**	**040096**	Ø 19
SEAT - ALTEA XL (5P5, 5P8) 10/06→								
Guide Bolt, brake caliper								
1.2 TSI 1.4 TSI 1.6 1.6 LPG 1.6 Multifuel 1.6 TDI 1.8 TFSI 1.9 TDI 1.9 TDI 4x4 2.0 FSI 2.0 TDI 2.0 TDI 16V 2.0 TDI 16V 4x4 2.0 TDI 4x4 2.0 TFSI 2.0 TFSI 4x4	77 92 75 75 75 66 - 77 118 66 - 77 77 110 100 - 125 103 103 103 - 125 147 147	04/10→ 11/07→ 10/06→ 09/09→ 10/06→11/10 10/09→ 01/07→ 10/06→12/10 06/09→12/10 10/06→03/09 10/06→ 10/06→ 10/10→ 06/07→ 10/06→05/09 06/07→05/09		+PR 1ZE	2	**11.8171-0008.1**	**990049**	ATE
				+PR 1ZA / 1LJ	2	**11.8171-0008.1**	**990049**	ATE
1.4 16V	63	10/06→		05/08→; +PR 1ZE	2	**11.8171-0008.1**	**990049**	ATE
				05/08→; +PR 1ZA / 1LJ	2	**11.8171-0008.1**	**990049**	ATE
2.0 TFSI 2.0 TFSI 4x4	155 155	05/09→ 05/09→	←	+PR 1ZA / 1ZE / 1LJ	2	**11.8171-0008.1**	**990049**	ATE
Brake Disc								
1.2 TSI 1.4 TSI 1.6 1.6 LPG 1.6 Multifuel 1.6 TDI 1.8 TFSI 1.9 TDI 1.9 TDI 4x4 2.0 FSI 2.0 TDI 2.0 TDI 16V 2.0 TDI 16V 4x4 2.0 TDI 4x4 2.0 TFSI 2.0 TFSI 4x4	77 92 75 75 75 66 - 77 118 66 - 77 77 110 100 - 125 103 103 103 - 125 147 - 155 147 - 155	04/10→ 11/07→ 10/06→ 09/09→ 10/06→11/10 10/09→ 01/07→ 10/06→12/10 06/09→12/10 10/06→03/09 10/06→ 10/06→ 10/10→ 06/07→ 10/06→ 06/07→	←	+PR 1ZE		**24.0125-0145.1**	**425145**	Ø 288 Brake Disc Thickness [mm] 25 Minimum thickness [mm] 22 Vented + S
			←	+PR 1LJ / 1ZA		**24.0125-0158.1** **24.0325-0158.1**	**425158** **525158**	Ø 312 Brake Disc Thickness [mm] 25 Minimum thickness [mm] 22 Vented + S Ø 312 Brake Disc Thickness [mm] 25 Minimum thickness [mm] 22 Vented + S
			→	+PR 1KS		**24.0110-0356.1**	**410356**	Ø 272 Brake Disc Thickness [mm] 9.7 Minimum thickness [mm] 8 + S
1.4 16V	63	10/06→	←	05/08→; +PR 1ZE		**24.0125-0145.1**	**425145**	Ø 288 Brake Disc Thickness [mm] 25 Minimum thickness [mm] 22 Vented + S
			←	05/08→; +PR 1LJ / 1ZA		**24.0125-0158.1** **24.0325-0158.1**	**425158** **525158**	Ø 312 Brake Disc Thickness [mm] 25 Minimum thickness [mm] 22 Vented + S Ø 312 Brake Disc Thickness [mm] 25 Minimum thickness [mm] 22 Vented + S
			→	05/08→; +PR 1KS		**24.0110-0356.1**	**410356**	Ø 272 Brake Disc Thickness [mm] 9.7 Minimum thickness [mm] 8 + S

© 2022 Continental Aftermarket & Services GmbH

	kW				! #			
SEAT - ALTEA XL (5P5, 5P8) 10/06→								
Slave Cylinder, clutch								
1.6 1.6 Multifuel	75 75	10/06→ 10/06→11/10		01/07→		**24.2519-1706.3**	**040096**	Ø 19
1.6 LPG	75	09/09→				**24.2519-1706.3**	**040096**	Ø 19
SEAT - ARONA (KJ7) 07/17→								
Brake Disc								
1.0 TGi 1.0 TSI 1.5 TSI 1.6 SRE 1.6 TDI	66 70 - 85 110 81 70 - 85	11/18→ 07/17→ 07/17→ 07/17→ 07/17→	←	+PR 1ZG		**24.0122-0312.1**	**422312**	Ø 256 Brake Disc Thickness [mm] 22 Minimum thickness [mm] 19 Vented + S
			←	+PR 1ZE / 1ZQ / 1ZR / 1ZS		**24.0124-0263.1**	**424263**	Ø 275.7 Brake Disc Thickness [mm] 24 Minimum thickness [mm] 21 Vented + S
			→	+PR 1KD / 1KV		**24.0109-0123.1**	**409123**	Ø 230 Brake Disc Thickness [mm] 9 Minimum thickness [mm] 7 + S
Sensor, wheel speed								
1.0 TGi 1.0 TSI 1.5 TSI 1.6 SRE 1.6 TDI	66 70 - 85 110 81 70 - 85	11/18→ 07/17→ 07/17→ 07/17→ 07/17→	←	→ 11/19; ⊞		**24.0711-5273.3**	**360303**	
			←	→ 11/19; ⊞		**24.0711-5274.3**	**360304**	
Wheel Brake Cylinder								
1.0 TGi 1.0 TSI 1.5 TSI 1.6 SRE 1.6 TDI	66 70 - 85 110 81 70 - 85	11/18→ 07/17→ 07/17→ 07/17→ 07/17→	→	+PR 1KA	2	**24.3220-1757.3**	**020605**	ALU
Accessory Kit, brake shoes								
1.0 TGi 1.0 TSI 1.5 TSI 1.6 SRE 1.6 TDI	66 70 - 85 110 81 70 - 85	11/18→ 07/17→ 07/17→ 07/17→ 07/17→	→	+PR 1KA		**03.0137-9309.2**	**669309**	AP
Brake Shoe Set								
1.0 TGi 1.0 TSI 1.5 TSI 1.6 SRE 1.6 TDI	66 70 - 85 110 81 70 - 85	11/18→ 07/17→ 07/17→ 07/17→ 07/17→	→	+PR 1KA; → 12/20		**03.0137-0540.2**	**650540**	Ø 228 Width [mm] 42 + HEB
SEAT - ATECA (KH7, KHP) 04/16→								
Brake Master Cylinder								
1.4 TSI 4Drive 1.5 TSI 4Drive 2.0 TDI 4Drive 2.0 TSI 4Drive	110 110 140 140	06/16→ 07/18→ 06/16→ 05/17→		for left-hand drive vehicles		**24.4123-1719.3**	**011017**	TRW Ø 23.8 without brake fluid reservoir
2.0 TDI 4Drive	110	04/16→		06/16→; for left-hand drive vehicles		**24.4123-1719.3**	**011017**	TRW Ø 23.8 without brake fluid reservoir
Brake Caliper								
1.0 TSI 1.4 TSI 1.5 TSI 1.6 TDI 2.0 TDI	81 - 85 110 110 85 81 - 110	05/16→ 06/16→ 07/18→ 04/16→07/18 04/16→	←	+PR 1ZA; ⊞		**24.3571-1801.5**	**241387**	without holder
			←	+PR 1ZA; ⊞		**24.3571-1802.5**	**241388**	without holder
			→	+PR 1KE; ⊞		**24.6238-7047.5**	**241181**	ATE without holder + eFSB
			→	+PR 1KE; ⊞		**24.6238-7048.5**	**241182**	ATE without holder + eFSB
1.4 TSI 4Drive 1.5 TSI 4Drive 2.0 TDI 4Drive 2.0 TSI 4Drive	110 110 140 140	06/16→ 07/18→ 06/16→ 05/17→	←	+PR 1ZA; ⊞		**24.3571-1801.5**	**241387**	without holder
			←	+PR 1ZA; ⊞		**24.3571-1802.5**	**241388**	without holder
			→	+PR 1KE; ⊞		**24.6238-7023.5** **24.6238-7047.5**	**241241** **241181**	ATE without holder + eFSB ATE without holder + eFSB

SEAT - ATECA (KH7, KHP) 04/16→

	kW				! #			
Brake Caliper								
1.4 TSI 4Drive 1.5 TSI 4Drive 2.0 TDI 4Drive 2.0 TSI 4Drive	110 110 140 140	06/16→ 07/18→ 06/16→ 05/17→	➡	+PR 1KE; ◪		**24.6238-7024.5** **24.6238-7048.5**	**241242** **241182**	ATE without holder + eFSB ATE without holder + eFSB
2.0 TDI 4Drive	110	04/16→	⬅	+PR 1ZA; ◩		**24.3571-1801.5**	**241387**	without holder
			⬅	+PR 1ZA; ◪		**24.3571-1802.5**	**241388**	without holder
			➡	06/16→; +PR 1KE; ◩		**24.6238-7023.5**	**241241**	ATE without holder + eFSB
			➡	06/16→; +PR 1KE; ◪		**24.6238-7024.5**	**241242**	ATE without holder + eFSB
			➡	+PR 1KE; ◩		**24.6238-7047.5**	**241181**	ATE without holder + eFSB
			➡	+PR 1KE; ◪		**24.6238-7048.5**	**241182**	ATE without holder + eFSB
Brake Pad Set, disc brake								
1.0 TSI 1.4 TSI 1.4 TSI 4Drive 1.5 TSI 1.5 TSI 4Drive 1.6 TDI 2.0 TDI 2.0 TDI 4Drive 2.0 TSI 4Drive	81 - 85 110 110 110 110 85 81 - 110 110 - 140 140	05/16→ 06/16→ 06/16→ 07/18→ 07/18→ 04/16→07/18 04/16→ 04/16→ 05/17→	⬅	+PR 1ZA / 1ZE / 1ZJ		**13.0460-2785.2** **13.0470-2785.2**	**602785** **LD2785**	TRW 25683 20,4 + WE / + WK TRW 25683 20,4 + WE / + WK Ceramic
			➡	+PR 1KE / 2EJ		**13.0460-7293.2** **13.0470-7293.2**	**607293** **LD7293**	ATE 25008 16,3 - WE / - WK ATE 25008 16,3 - WE / - WK Ceramic
Warning Contact, brake pad wear								
1.0 TSI 1.4 TSI 1.4 TSI 4Drive 1.5 TSI 1.5 TSI 4Drive 1.6 TDI 2.0 TDI 2.0 TDI 4Drive 2.0 TSI 4Drive	81 - 85 110 110 110 110 85 81 - 110 110 - 140 140	05/16→ 06/16→ 06/16→ 07/18→ 07/18→ 04/16→07/18 04/16→ 04/16→ 05/17→	⬅		1	**24.8190-0065.2**	**620065**	
Brake Disc								
1.0 TSI 1.4 TSI 1.5 TSI 1.6 TDI 2.0 TDI	81 - 85 110 110 85 81 - 110	05/16→ 06/16→ 07/18→ 04/16→07/18 04/16→	⬅	+PR 1ZE / 1ZJ		**24.0125-0145.1**	**425145**	Ø 288 Brake Disc Thickness [mm] 25 Minimum thickness [mm] 22 Vented + S
			⬅	+PR 1ZA		**24.0125-0158.1**	**425158**	Ø 312 Brake Disc Thickness [mm] 25 Minimum thickness [mm] 22 Vented + S
			➡	+PR 1KE / 2EJ		**24.0110-0356.1** **24.0110-0409.1**	**410356** **410409**	Ø 272 Brake Disc Thickness [mm] 9.7 Minimum thickness [mm] 8 + S Ø 272 Brake Disc Thickness [mm] 10 Minimum thickness [mm] 8 + S
1.4 TSI 4Drive 1.5 TSI 4Drive 2.0 TDI 4Drive 2.0 TSI 4Drive	110 110 140 140	06/16→ 07/18→ 06/16→ 05/17→	⬅	+PR 1ZE / 1ZJ		**24.0125-0145.1**	**425145**	Ø 288 Brake Disc Thickness [mm] 25 Minimum thickness [mm] 22 Vented + S
			⬅	+PR 1ZA		**24.0125-0158.1** **24.0325-0158.1**	**425158** **525158**	Ø 312 Brake Disc Thickness [mm] 25 Minimum thickness [mm] 22 Vented + S Ø 312 Brake Disc Thickness [mm] 25 Minimum thickness [mm] 22 Vented + S
			➡	+PR 1KE / 2EJ		**24.0110-0356.1** **24.0110-0409.1**	**410356** **410409**	Ø 272 Brake Disc Thickness [mm] 9.7 Minimum thickness [mm] 8 + S Ø 272 Brake Disc Thickness [mm] 10 Minimum thickness [mm] 8 + S
2.0 TDI 4Drive	110	04/16→	⬅	+PR 1ZE / 1ZJ		**24.0125-0145.1**	**425145**	Ø 288 Brake Disc Thickness [mm] 25 Minimum thickness [mm] 22 Vented + S

© 2022 Continental Aftermarket & Services GmbH

	kW				! #			
SEAT - ATECA (KH7, KHP) 04/16→								
Brake Disc								
2.0 TDI 4Drive	110	04/16→	←	+PR 1ZA		**24.0125-0158.1**	**425158**	Ø 312 Brake Disc Thickness [mm] 25 Minimum thickness [mm] 22 Vented + S
			←	06/16→; +PR 1ZA		**24.0325-0158.1**	**525158**	Ø 312 Brake Disc Thickness [mm] 25 Minimum thickness [mm] 22 Vented + S
			→	+PR 1KE / 2EJ		**24.0110-0356.1** **24.0110-0409.1**	**410356** **410409**	Ø 272 Brake Disc Thickness [mm] 9.7 Minimum thickness [mm] 8 + S Ø 272 Brake Disc Thickness [mm] 10 Minimum thickness [mm] 8 + S
Sensor, wheel speed								
1.0 TSI	81 - 85	05/16→	←	⊞		**24.0711-5273.3**	**360303**	
1.4 TSI 1.5 TSI 1.6 TDI 2.0 TDI	110 110 85 81 - 110	06/16→ 07/18→ 04/16→07/18 04/16→	←	⊟		**24.0711-5274.3**	**360304**	
			→		2	**24.0711-6337.3**	**360390**	
1.4 TSI 4Drive 1.5 TSI 4Drive 2.0 TDI 4Drive	110 110 110 - 140	06/16→ 07/18→ 04/16→	←	⊞		**24.0711-5273.3**	**360303**	
			←	⊟		**24.0711-5274.3**	**360304**	
2.0 TSI 4Drive	140	05/17→	→	⊞		**24.0711-5401.3**	**360330**	
			→	12/19→; ⊞		**24.0711-5401.3**	**360330**	
			→	⊟		**24.0711-5402.3**	**360331**	
			→	12/19→; ⊟		**24.0711-5402.3**	**360331**	
Control Element, parking brake caliper								
1.0 TSI	81 - 85	05/16→	→	⊞		**11.9282-1001.3**	**250159**	ATE
1.4 TSI 1.4 TSI 4Drive 1.5 TSI 1.5 TSI 4Drive 1.6 TDI 2.0 TDI 2.0 TDI 4Drive 2.0 TSI 4Drive	110 110 110 110 85 81 - 110 110 - 140 140	06/16→ 06/16→ 07/18→ 07/18→ 04/16→07/18 04/16→ 04/16→ 05/17→	→	⊟		**11.9282-1002.3**	**250160**	ATE
SEAT - CORDOBA (6L2) 09/02→11/09								
Brake Disc								
1.2 1.4 TDI	47 55	10/02→06/06 10/02→12/05	→			**24.0109-0123.1**	**409123**	Ø 230 Brake Disc Thickness [mm] 9 Minimum thickness [mm] 7 + S
1.2 12V 1.4 16V 1.4 TDI 1.6 1.6 16V 1.9 TDI	51 63 - 74 51 - 59 74 77 96	05/06→11/09 10/02→11/09 05/05→11/09 04/03→11/09 11/06→11/09 10/02→11/09	→	→ 06/09		**24.0109-0123.1**	**409123**	Ø 230 Brake Disc Thickness [mm] 9 Minimum thickness [mm] 7 + S
1.4 16V	55	09/02→12/07	→	10/02→		**24.0109-0123.1**	**409123**	Ø 230 Brake Disc Thickness [mm] 9 Minimum thickness [mm] 7 + S
1.9 SDI 1.9 TDI 2.0	47 74 85	09/02→11/09 09/02→11/09 09/02→11/09	→	10/02→ 06/09		**24.0109-0123.1**	**409123**	Ø 230 Brake Disc Thickness [mm] 9 Minimum thickness [mm] 7 + S
Sensor, wheel speed								
1.2 1.4 TDI	47 55	10/02→06/06 10/02→12/05	←	⊞		**24.0711-5273.3**	**360303**	
			←	⊟		**24.0711-5274.3**	**360304**	
1.2 12V 1.4 16V 1.4 TDI 1.6 1.6 16V	51 63 - 74 51 - 59 74 77	05/06→11/09 10/02→11/09 05/05→11/09 04/03→11/09 11/06→11/09	←	→ 06/09; ⊞		**24.0711-5273.3**	**360303**	
			←	→ 06/09; ⊟		**24.0711-5274.3**	**360304**	

	kW				! #			
SEAT - CORDOBA (6L2) 09/02→11/09								
Sensor, wheel speed								
1.9 TDI	96	10/02→11/09	←	→ 06/09;		**24.0711-5273.3**	**360303**	
			←	→ 06/09;		**24.0711-5274.3**	**360304**	
1.4 16V	55	09/02→12/07	←	10/02→;		**24.0711-5273.3**	**360303**	
			←	10/02→;		**24.0711-5274.3**	**360304**	
1.9 SDI 1.9 TDI 2.0	47 74 85	09/02→11/09 09/02→11/09 09/02→11/09	←	10/02→ 06/09;		**24.0711-5273.3**	**360303**	
			←	10/02→ 06/09;		**24.0711-5274.3**	**360304**	
SEAT - IBIZA III (6L1) 02/02→11/09								
Guide Bolt, brake caliper								
1.8 T Cupra R	132	01/04→02/08			2	**11.8171-0008.1**	**990049**	ATE
1.9 TDI Cupra R	118	03/04→02/08		+PR 1LT	2	**11.8171-0008.1**	**990049**	ATE
Brake Disc								
1.2 1.2 12V 1.4 16V 1.4 TDI 1.6 1.6 16V 1.8 T Cupra R 1.8 T FR 1.9 SDI 1.9 TDI 1.9 TDI Cupra R 1.9 TDI Joya Racer 2.0	44 - 47 51 55 - 74 51 - 59 74 77 132 110 47 74 - 96 118 112 85	02/02→05/08 05/06→11/09 02/02→11/09 05/02→11/09 02/03→11/09 11/06→11/09 01/04→02/08 12/03→05/08 02/02→12/05 02/02→11/09 03/04→02/08 07/03→06/04 04/02→11/09	→			**24.0109-0123.1**	**409123**	Ø 230 Brake Disc Thickness [mm] 9 Minimum thickness [mm] 7 + S
Sensor, wheel speed								
1.2 1.2 12V 1.4 16V 1.4 TDI 1.6 1.6 16V 1.8 T Cupra R 1.8 T FR 1.9 SDI 1.9 TDI 1.9 TDI Cupra R 1.9 TDI Joya Racer 2.0	44 - 47 51 55 - 74 51 - 59 74 77 132 110 47 74 - 96 118 112 85	02/02→05/08 05/06→11/09 02/02→11/09 05/02→11/09 02/03→11/09 11/06→11/09 01/04→02/08 12/03→05/08 02/02→12/05 02/02→11/09 03/04→02/08 07/03→06/04 04/02→11/09	←			**24.0711-5273.3**	**360303**	
			←			**24.0711-5274.3**	**360304**	
SEAT - IBIZA IV (6J5, 6P1) 03/08→12/17								
Guide Bolt, brake caliper								
1.0 1.0 TSI 1.2 TSI 1.4 TDI 1.6	55 70 - 81 66 - 81 55 - 77 81	05/15→06/17 05/15→06/17 05/15→06/17 05/15→06/17 07/15→06/17	←	+PR 1ZR / 1ZS / 1ZC	2	**11.8171-0008.1**	**990049**	ATE
1.2 1.2 TDI 1.2 TSI 1.4 TDI 1.4 TSI 1.6 LPG 1.9 TDI 2.0 2.0 TDI	44 55 63 - 77 59 110 60 66 85 105	07/09→05/11 06/10→03/12 09/10→05/15 07/08→06/10 06/09→06/17 05/11→05/15 07/08→06/10 10/08→05/15 01/10→05/15	←	+PR 1ZR / 1ZS	2	**11.8171-0008.1**	**990049**	ATE
1.2 1.2 LPG 1.4 1.4 LPG 1.6 1.9 TDI	51 51 63 63 77 77	03/08→05/15 03/08→05/11 03/08→05/15 03/08→05/11 05/08→03/12 03/08→06/10	←	07/08→; +PR 1ZR / 1ZS	2	**11.8171-0008.1**	**990049**	ATE

© 2022 Continental Aftermarket & Services GmbH

	kW				! #			
SEAT - IBIZA IV (6J5, 6P1) 03/08→12/17								
Guide Bolt, brake caliper								
1.4 TSI	103	10/13→05/15	←	12/13→; +PR 1ZR / 1ZS	2	**11.8171-0008.1**	**990049**	ATE
1.6 TDI	55 - 77	05/09→05/15	←	06/09→; +PR 1ZR / 1ZS	2	**11.8171-0008.1**	**990049**	ATE
Brake Disc								
1.0 1.0 TSI 1.2 TSI	55 70 - 81 66	05/15→06/17 05/15→06/17 05/15→06/17	→	+PR 1KV / 1KT		**24.0109-0123.1**	**409123**	Ø 230 Brake Disc Thickness [mm] 9 Minimum thickness [mm] 7 + S
1.2 1.2 TDI 1.2 TSI 1.4 TDI 1.6 1.6 LPG 1.9 TDI 2.0 2.0 TDI	44 55 63 - 81 55 - 77 81 60 66 85 105	07/09→05/11 06/10→03/12 09/10→06/17 07/08→06/17 07/15→06/17 05/11→05/15 07/08→06/10 10/08→05/15 01/10→05/15	→	+PR 1KK / 1KT		**24.0109-0123.1**	**409123**	Ø 230 Brake Disc Thickness [mm] 9 Minimum thickness [mm] 7 + S
1.2 1.2 LPG 1.4 1.4 LPG 1.6 1.9 TDI	51 51 63 63 77 77	03/08→05/15 03/08→05/11 03/08→05/15 03/08→05/11 05/08→03/12 03/08→06/10	→	07/08→; +PR 1KK / 1KT		**24.0109-0123.1**	**409123**	Ø 230 Brake Disc Thickness [mm] 9 Minimum thickness [mm] 7 + S
1.4 TSI	103	10/13→05/15	→	12/13→; +PR 1KD / 1KS		**24.0109-0123.1**	**409123**	Ø 230 Brake Disc Thickness [mm] 9 Minimum thickness [mm] 7 + S
1.4 TSI	110	06/09→06/17	→	+PR 1KD / 1KS		**24.0109-0123.1**	**409123**	Ø 230 Brake Disc Thickness [mm] 9 Minimum thickness [mm] 7 + S
1.6 TDI	55 - 77	05/09→05/15	→	06/09→; +PR 1KK / 1KT		**24.0109-0123.1**	**409123**	Ø 230 Brake Disc Thickness [mm] 9 Minimum thickness [mm] 7 + S
Sensor, wheel speed								
1.0 1.0 TSI	55 70 - 81	05/15→06/17 05/15→06/17	←	◪		**24.0711-5273.3**	**360303**	
			←	◪		**24.0711-5274.3**	**360304**	
1.2 1.2 TDI 1.2 TSI 1.4 TDI 1.4 TSI 1.6 1.6 LPG 1.9 TDI 2.0 2.0 TDI	44 55 63 - 81 55 - 77 110 81 60 66 85 105	07/09→05/11 06/10→03/12 09/10→06/17 07/08→06/17 06/09→06/17 07/15→06/17 05/11→05/15 07/08→06/10 10/08→05/15 01/10→05/15						
1.2 1.2 LPG 1.4 1.4 LPG 1.6 1.9 TDI	51 51 63 63 77 77	03/08→05/15 03/08→05/11 03/08→05/15 03/08→05/11 05/08→03/12 03/08→06/10	←	07/08→; ◪		**24.0711-5273.3**	**360303**	
			←	07/08→; ◪		**24.0711-5274.3**	**360304**	
1.4 TSI	103	10/13→05/15	←	12/13→; ◪		**24.0711-5273.3**	**360303**	
			←	12/13→; ◪		**24.0711-5274.3**	**360304**	
1.6 TDI	55 - 77	05/09→05/15	←	06/09→; ◪		**24.0711-5273.3**	**360303**	
			←	06/09→; ◪		**24.0711-5274.3**	**360304**	
Slave Cylinder, clutch								
1.0 1.0 TSI 1.2 1.2 TDI 1.2 TSI 1.4 TDI 1.4 TSI 1.6 1.6 LPG 1.9 TDI 2.0	55 70 - 81 44 55 63 - 81 55 - 77 110 81 60 66 85	05/15→06/17 05/15→06/17 07/09→05/11 06/10→03/12 09/10→06/17 07/08→06/17 06/09→06/17 07/15→06/17 05/11→05/15 07/08→06/10 10/08→05/15		+PR 0EM		**24.2519-1706.3**	**040096**	Ø 19

	kW				! #			
SEAT - IBIZA IV (6J5, 6P1) 03/08→12/17								
Slave Cylinder, clutch								
2.0 TDI	105	01/10→05/15		+PR 0EM		**24.2519-1706.3**	**040096**	Ø 19
1.2 1.2 LPG 1.4 1.4 LPG 1.6 1.9 TDI	51 51 63 63 77 77	03/08→05/15 03/08→05/11 03/08→05/15 03/08→05/11 05/08→03/12 03/08→06/10		07/08→; +PR 0EM		**24.2519-1706.3**	**040096**	Ø 19
1.4 TSI	103	10/13→05/15		12/13→; +PR 0EM		**24.2519-1706.3**	**040096**	Ø 19
1.6 TDI	55 - 77	05/09→05/15		06/09→; +PR 0EM		**24.2519-1706.3**	**040096**	Ø 19
SEAT - IBIZA IV Hatchback Van (6J1) 04/08→05/15								
Guide Bolt, brake caliper								
1.2 1.2 TDI	51 55	04/08→05/15 05/10→05/15	←	+PR 1ZR / 1ZS	2	**11.8171-0008.1**	**990049**	ATE
1.6 TDI	66	05/09→05/15	←	06/09→; +PR 1ZR / 1ZS	2	**11.8171-0008.1**	**990049**	ATE
Brake Disc								
1.2 1.2 TDI	51 55	04/08→05/15 05/10→05/15	→	+PR 1KK / 1KT		**24.0109-0123.1**	**409123**	Ø 230 Brake Disc Thickness [mm] 9 Minimum thickness [mm] 7 + S
1.6 TDI	66	05/09→05/15	→	06/09→; +PR 1KK / 1KT		**24.0109-0123.1**	**409123**	Ø 230 Brake Disc Thickness [mm] 9 Minimum thickness [mm] 7 + S
Sensor, wheel speed								
1.2 1.2 TDI	51 55	04/08→05/15 05/10→05/15	←			**24.0711-5273.3**	**360303**	
			←			**24.0711-5274.3**	**360304**	
1.6 TDI	66	05/09→05/15	←	06/09→;		**24.0711-5273.3**	**360303**	
			←	06/09→;		**24.0711-5274.3**	**360304**	
Slave Cylinder, clutch								
1.2 1.2 TDI	51 55	04/08→05/15 05/10→05/15		+PR 0EM		**24.2519-1706.3**	**040096**	Ø 19
1.6 TDI	66	05/09→05/15		06/09→; +PR 0EM		**24.2519-1706.3**	**040096**	Ø 19
SEAT - IBIZA IV SC (6J1, 6P5) 06/08→12/18								
Guide Bolt, brake caliper								
1.0 1.0 TSI 1.2 TSI 1.4 TDI 1.6 1.8 TSI Cupra	55 70 - 81 66 - 81 55 - 77 81 141	05/15→12/16 05/15→12/16 05/15→12/16 05/15→12/16 07/15→12/16 11/15→12/16	←	+PR 1ZR / 1ZS / 1ZC	2	**11.8171-0008.1**	**990049**	ATE
1.2 1.2 TDI 1.2 TSI 1.4 1.4 LPG 1.4 TDI 1.4 TSI 1.6 1.6 LPG 1.6 TDI 1.9 TDI 2.0 2.0 TDI	44 - 51 55 63 - 77 63 63 59 110 77 60 55 66 - 77 85 105	07/08→05/15 05/10→05/15 09/10→05/15 07/08→05/15 07/08→05/11 07/08→06/10 01/09→12/16 07/08→05/15 05/11→05/15 05/10→06/10 06/08→06/10 10/08→05/15 01/10→05/15	←	+PR 1ZR / 1ZS	2	**11.8171-0008.1**	**990049**	ATE
1.4 TSI	103	10/13→05/15	←	12/13→; +PR 1ZR / 1ZS	2	**11.8171-0008.1**	**990049**	ATE
1.6 TDI	66 - 77	05/09→05/15	←	06/09→; +PR 1ZR / 1ZS	2	**11.8171-0008.1**	**990049**	ATE
Brake Disc								
1.0 1.0 TSI 1.2 TSI 1.8 TSI Cupra	55 70 - 81 66 141	05/15→12/16 05/15→12/16 05/15→12/16 11/15→12/16	→	+PR 1KV / 1KT		**24.0109-0123.1**	**409123**	Ø 230 Brake Disc Thickness [mm] 9 Minimum thickness [mm] 7 + S

© 2022 Continental Aftermarket & Services GmbH

SEAT - IBIZA IV SC (6J1, 6P5) 06/08→12/18

Brake Disc

	kW				! #			
1.2	44 - 51	07/08→05/15	➡	+PR 1KK / 1KT		**24.0109-0123.1**	**409123**	Ø 230 Brake Disc Thickness [mm] 9 Minimum thickness [mm] 7 + S
1.2 TDI	55	05/10→05/15						
1.2 TSI	63 - 81	09/10→12/16						
1.4	63	07/08→05/15						
1.4 LPG	63	07/08→05/11						
1.4 TDI	55 - 77	07/08→12/16						
1.6	77 - 81	07/08→12/16						
1.6 LPG	60	05/11→05/15						
1.6 TDI	55	05/10→06/10						
1.9 TDI	66 - 77	06/08→06/10						
2.0	85	10/08→05/15						
2.0 TDI	105	01/10→05/15						
1.4 TSI	103	10/13→05/15	➡	12/13→; +PR 1KD / 1KS		**24.0109-0123.1**	**409123**	Ø 230 Brake Disc Thickness [mm] 9 Minimum thickness [mm] 7 + S
1.4 TSI	110	01/09→12/16	➡	+PR 1KD / 1KS		**24.0109-0123.1**	**409123**	Ø 230 Brake Disc Thickness [mm] 9 Minimum thickness [mm] 7 + S
1.4 TSI Cupra	132	06/09→05/15	➡	+PR 1KP		**24.0109-0123.1**	**409123**	Ø 230 Brake Disc Thickness [mm] 9 Minimum thickness [mm] 7 + S
1.6 TDI	66 - 77	05/09→05/15	➡	06/09→; +PR 1KK / 1KT		**24.0109-0123.1**	**409123**	Ø 230 Brake Disc Thickness [mm] 9 Minimum thickness [mm] 7 + S

Sensor, wheel speed

1.0	55	05/15→12/16	⬅	◪		**24.0711-5273.3**	**360303**	
1.0 TSI	70 - 81	05/15→12/16	⬅	◩		**24.0711-5274.3**	**360304**	
1.2	44 - 51	07/08→05/15						
1.2 TDI	55	05/10→05/15						
1.2 TSI	63 - 81	09/10→12/16						
1.4	63	07/08→05/15						
1.4 LPG	63	07/08→05/11						
1.4 TDI	55 - 77	07/08→12/16						
1.4 TSI	110	01/09→12/16						
1.4 TSI Cupra	132	06/09→05/15						
1.6	77 - 81	07/08→12/16						
1.6 LPG	60	05/11→05/15						
1.6 TDI	55	05/10→06/10						
1.8 TSI Cupra	141	11/15→12/16						
1.9 TDI	66 - 77	06/08→06/10						
2.0	85	10/08→05/15						
2.0 TDI	105	01/10→05/15						
1.4 TSI	103	10/13→05/15	⬅	12/13→; ◪		**24.0711-5273.3**	**360303**	
			⬅	12/13→; ◩		**24.0711-5274.3**	**360304**	
1.6 TDI	66 - 77	05/09→05/15	⬅	06/09→; ◪		**24.0711-5273.3**	**360303**	
			⬅	06/09→; ◩		**24.0711-5274.3**	**360304**	

Slave Cylinder, clutch

1.0	55	05/15→12/16		+PR 0EM		**24.2519-1706.3**	**040096**	Ø 19
1.0 TSI	70 - 81	05/15→12/16						
1.2	44 - 51	07/08→05/15						
1.2 TDI	55	05/10→05/15						
1.2 TSI	63 - 81	09/10→12/16						
1.4	63	07/08→05/15						
1.4 LPG	63	07/08→05/11						
1.4 TDI	55 - 77	07/08→12/16						
1.4 TSI	110	01/09→12/16						
1.4 TSI Cupra	132	06/09→05/15						
1.6	77 - 81	07/08→12/16						
1.6 LPG	60	05/11→05/15						
1.6 TDI	55	05/10→06/10						
1.8 TSI Cupra	141	11/15→12/16						

	kW				! #			
SEAT - IBIZA IV SC (6J1, 6P5) 06/08→12/18								
Slave Cylinder, clutch								
1.9 TDI	66 - 77	06/08→06/10		+PR 0EM		**24.2519-1706.3**	**040096**	Ø 19
2.0	85	10/08→05/15						
2.0 TDI	105	01/10→05/15						
1.4 TSI	103	10/13→05/15		12/13→; +PR 0EM		**24.2519-1706.3**	**040096**	Ø 19
1.6 TDI	66 - 77	05/09→05/15		06/09→; +PR 0EM		**24.2519-1706.3**	**040096**	Ø 19
SEAT - IBIZA IV ST (6J8, 6P8) 03/10→07/16								
Guide Bolt, brake caliper								
1.0	55	05/15→07/16	←	+PR 1ZR / 1ZS / 1ZC	2	**11.8171-0008.1**	**990049**	ATE
1.0 TSI	70 - 81	05/15→07/16						
1.2 TSI	66 - 81	05/15→07/16						
1.4 TDI	55 - 77	05/15→07/16						
1.2	44 - 51	05/10→05/15	←	+PR 1ZR / 1ZS	2	**11.8171-0008.1**	**990049**	ATE
1.2 TDI	55	04/10→05/15						
1.2 TSI	63 - 77	09/10→05/15						
1.4	63	03/10→05/15						
1.4 TSI	110	02/12→07/16						
1.6	77	02/12→05/15						
1.6 TDI	66 - 77	03/10→05/15						
1.4 TSI	103	10/13→05/15	←	12/13→; +PR 1ZR / 1ZS	2	**11.8171-0008.1**	**990049**	ATE
Brake Disc								
1.0	55	05/15→07/16	→	+PR 1KV / 1KT		**24.0109-0123.1**	**409123**	Ø 230 Brake Disc Thickness [mm] 9 Minimum thickness [mm] 7 + S
1.0 TSI	70 - 81	05/15→07/16						
1.2 TSI	66	05/15→07/16						
1.2	44 - 51	05/10→05/15	→	+PR 1KK / 1KT		**24.0109-0123.1**	**409123**	Ø 230 Brake Disc Thickness [mm] 9 Minimum thickness [mm] 7 + S
1.2 TDI	55	04/10→05/15						
1.2 TSI	63 - 81	09/10→07/16						
1.4	63	03/10→05/15						
1.4 TDI	55 - 77	05/15→07/16						
1.6	77	02/12→05/15						
1.6 TDI	66 - 77	03/10→05/15						
1.4 TSI	103	10/13→05/15	→	12/13→; +PR 1KD / 1KS		**24.0109-0123.1**	**409123**	Ø 230 Brake Disc Thickness [mm] 9 Minimum thickness [mm] 7 + S
1.4 TSI	110	02/12→07/16	→	+PR 1KD / 1KS		**24.0109-0123.1**	**409123**	Ø 230 Brake Disc Thickness [mm] 9 Minimum thickness [mm] 7 + S
Sensor, wheel speed								
1.0	55	05/15→07/16	←			**24.0711-5273.3**	**360303**	
1.0 TSI	70 - 81	05/15→07/16	←			**24.0711-5274.3**	**360304**	
1.2	44 - 51	05/10→05/15						
1.2 TDI	55	04/10→05/15						
1.2 TSI	63 - 81	09/10→07/16						
1.4	63	03/10→05/15						
1.4 TDI	55 - 77	05/15→07/16						
1.4 TSI	110	02/12→07/16						
1.6	77	02/12→05/15						
1.6 TDI	66 - 77	03/10→05/15						
1.4 TSI	103	10/13→05/15	←	12/13→;		**24.0711-5273.3**	**360303**	
			←	12/13→;		**24.0711-5274.3**	**360304**	
Slave Cylinder, clutch								
1.0	55	05/15→07/16		+PR 0EM		**24.2519-1706.3**	**040096**	Ø 19
1.0 TSI	70 - 81	05/15→07/16						
1.2	44 - 51	05/10→05/15						
1.2 TDI	55	04/10→05/15						

© 2022 Continental Aftermarket & Services GmbH

	kW				! #			
SEAT - IBIZA IV ST (6J8, 6P8) 03/10→07/16								
Slave Cylinder, clutch								
1.2 TSI 1.4 1.4 TDI 1.4 TSI 1.6 1.6 TDI	63 - 81 63 55 - 77 110 77 66 - 77	09/10→07/16 03/10→05/15 05/15→07/16 02/12→07/16 02/12→05/15 03/10→05/15		+PR 0EM		**24.2519-1706.3**	**040096**	Ø 19
1.4 TSI	103	10/13→05/15		12/13→; +PR 0EM		**24.2519-1706.3**	**040096**	Ø 19
SEAT - IBIZA V (KJ1, KJG) 01/17→								
Brake Master Cylinder								
1.0 1.0 MPi 1.0 TGI 1.0 TSI 1.5 TSI 1.6 1.6 TDI	48 - 55 59 66 70 - 85 110 81 59 - 85	01/17→ 07/18→ 11/17→ 01/17→ 07/17→ 05/17→ 09/17→		for left-hand drive vehicles; +PR 1ZE / 1ZQ		**24.4123-1719.3**	**011017**	TRW Ø 23.8 without brake fluid reservoir
Brake Disc								
1.0 1.0 MPi 1.0 TGI 1.0 TSI 1.5 TSI 1.6 1.6 TDI	48 - 55 59 66 70 - 85 110 81 59 - 85	01/17→ 07/18→ 11/17→ 01/17→ 07/17→ 05/17→ 09/17→	←	+PR 1ZG		**24.0122-0312.1**	**422312**	Ø 256 Brake Disc Thickness [mm] 22 Minimum thickness [mm] 19 Vented + S
			←	+PR 1ZE / 1ZQ / 1ZR / 1ZS		**24.0124-0263.1**	**424263**	Ø 275.7 Brake Disc Thickness [mm] 24 Minimum thickness [mm] 21 Vented + S
			→	+PR 1KD / 1KV		**24.0109-0123.1**	**409123**	Ø 230 Brake Disc Thickness [mm] 9 Minimum thickness [mm] 7 + S
Sensor, wheel speed								
1.0	48 - 55	01/17→	←	→ 11/19; ■		**24.0711-5273.3**	**360303**	
1.0 MPi 1.0 TGI 1.0 TSI 1.5 TSI 1.6 1.6 TDI	59 66 70 - 85 110 81 59 - 85	07/18→ 11/17→ 01/17→ 07/17→ 05/17→ 09/17→	←	→ 11/19; ■		**24.0711-5274.3**	**360304**	
Wheel Brake Cylinder								
1.0 1.0 MPi 1.0 TGI 1.0 TSI 1.5 TSI 1.6 1.6 TDI	48 - 55 59 66 70 - 85 110 81 59 - 85	01/17→ 07/18→ 11/17→ 01/17→ 07/17→ 05/17→ 09/17→	→	+PR 1KA / 1KG	2	**24.3220-1757.3**	**020605**	ALU
Accessory Kit, brake shoes								
1.0	48 - 55	01/17→	→	+PR 1KA		**03.0137-9309.2**	**669309**	AP
1.0 MPi 1.0 TGI 1.0 TSI 1.5 TSI 1.6 1.6 TDI	59 66 70 - 85 110 81 59 - 85	07/18→ 11/17→ 01/17→ 07/17→ 05/17→ 09/17→	→	+PR 1KG		**03.0137-9317.2**	**669317**	
Brake Shoe Set								
1.0	48 - 55	01/17→	→	+PR 1KG		**03.0137-0539.2**	**650539**	Ø 203 Width [mm] 38 + HEB
1.0 MPi 1.0 TGI	59 66	07/18→ 11/17→	→	+PR 1KA		**03.0137-0540.2**	**650540**	Ø 228 Width [mm] 42 + HEB

	kW				! #			
SEAT - IBIZA V (KJ1, KJG) 01/17→								
Brake Shoe Set								
1.0 TSI	70 - 85	01/17→	➡	+PR 1KG		**03.0137-0539.2**	**650539**	Ø 203 Width [mm] 38 + HEB
1.5 TSI	110	07/17→	➡	+PR 1KA		**03.0137-0540.2**	**650540**	Ø 228 Width [mm] 42 + HEB
1.6	81	05/17→						
1.6 TDI	59 - 85	09/17→						
SEAT - LEON (1M1) 11/99→06/06								
Guide Bolt, brake caliper								
1.4 16V	55	11/99→06/06		→ 07/05; +PR 1LJ / 1ZQ	2	**11.8171-0008.1**	**990049**	ATE
1.6	74	11/99→06/06		→ 07/05; +PR 1LQ / 1LS	2	**11.8171-0008.1**	**990049**	ATE
1.6 16 V	77	09/00→06/06						
1.8 20V	92	11/99→06/06	⬅	→ 07/05; +PR 1LE	2	**11.8171-0008.1**	**990049**	ATE
1.8 20V T	132	11/99→06/06						
1.8 20V T 4	132	11/99→06/06						
1.9 SDI	50	11/99→06/06						
1.9 TDI	66 - 96	11/99→06/06						
1.9 TDI Syncro	110	05/02→06/06						
1.8 T Cupra R	154	02/02→06/06		05/02→ 07/05; +PR 1LT	2	**11.8171-0008.1**	**990049**	ATE
1.8 T Cupra R	165	07/03→06/06		→ 07/05; +PR 1LT	2	**11.8171-0008.1**	**990049**	ATE
2.8 Cupra 4	150	02/01→06/06						
1.9 TDI	110	09/00→06/06		02/01→ 07/05; +PR 1LJ / 1ZQ	2	**11.8171-0008.1**	**990049**	ATE
				02/01→ 07/05; +PR 1LQ / 1LS	2	**11.8171-0008.1**	**990049**	ATE
			⬅	02/01→ 07/05; +PR 1LE	2	**11.8171-0008.1**	**990049**	ATE
2.8	150	05/02→06/04		+PR 1LJ / 1ZQ	2	**11.8171-0008.1**	**990049**	ATE
				+PR 1LQ / 1LS	2	**11.8171-0008.1**	**990049**	ATE
			⬅	+PR 1LE	2	**11.8171-0008.1**	**990049**	ATE
Brake Disc								
1.4 16V	55	11/99→06/06	➡	→ 07/05; +PR 1KK / 1KP / 1KQ		**24.0109-0123.1**	**409123**	Ø 230 Brake Disc Thickness [mm] 9 Minimum thickness [mm] 7 + S
1.6	74	11/99→06/06						
1.6 16 V	77	09/00→06/06						
1.8 20V	92	11/99→06/06						
1.8 20V T	132	11/99→06/06						
1.8 20V T 4	132	11/99→06/06						
1.9 SDI	50	11/99→06/06						
1.9 TDI	66 - 96	11/99→06/06						
1.9 TDI Syncro	110	05/02→06/06						
1.9 TDI	110	09/00→06/06	➡	02/01→ 07/05; +PR 1KK / 1KP / 1KQ		**24.0109-0123.1**	**409123**	Ø 230 Brake Disc Thickness [mm] 9 Minimum thickness [mm] 7 + S
2.8	150	05/02→06/04	➡	+PR 1KK / 1KP / 1KQ		**24.0109-0123.1**	**409123**	Ø 230 Brake Disc Thickness [mm] 9 Minimum thickness [mm] 7 + S
SEAT - LEON (1P1) 05/05→12/13								
Guide Bolt, brake caliper								
1.2 TSI	77	02/10→12/12		→ 10/12; +PR 1LJ	2	**11.8171-0008.1**	**990049**	ATE
1.6 LPG	75	12/09→12/12		→ 10/12; +PR 1ZE	2	**11.8171-0008.1**	**990049**	ATE
1.6 MultiFuel	75	07/05→08/13						
1.6 TDI	66 - 77	02/10→12/12		+PR 1LB; → 10/12	2	**11.8171-0008.1**	**990049**	ATE
1.4 16V	63	06/06→12/12		→ 10/12; +PR 1LJ	2	**11.8171-0008.1**	**990049**	ATE
1.4 TSI	92	11/07→12/12		→ 10/12; +PR 1ZE	2	**11.8171-0008.1**	**990049**	ATE
1.8 TSI	118	06/07→12/12		10/09→ 10/12; +PR 1LB	2	**11.8171-0008.1**	**990049**	ATE
2.0 Cupra R	195	09/09→12/12		→ 09/09; +PR 1LU	2	**11.8171-0008.1**	**990049**	ATE
2.0 TDI	125	05/06→12/12						
2.0 TFSI	155	06/09→12/12						
1.6	75	07/05→12/12		08/05→ 10/12; +PR 1LJ	2	**11.8171-0008.1**	**990049**	ATE
2.0 TDI 16V	103	07/05→12/12		08/05→ 10/12; +PR 1ZE	2	**11.8171-0008.1**	**990049**	ATE
				08/05→ 09/09; +PR 1LU	2	**11.8171-0008.1**	**990049**	ATE
				10/09→ 10/12; +PR 1LB	2	**11.8171-0008.1**	**990049**	ATE
1.9 TDI	66	06/07→12/10		→ 09/09; +PR 1LU	2	**11.8171-0008.1**	**990049**	ATE
2.0 TDI	103	10/05→10/10		10/09→; +PR 1LB	2	**11.8171-0008.1**	**990049**	ATE
2.0 TFSI	177	11/06→05/11		+PR 1LJ	2	**11.8171-0008.1**	**990049**	ATE
				+PR 1ZE	2	**11.8171-0008.1**	**990049**	ATE
1.9 TDI	77	07/05→12/10		08/05→; +PR 1LJ	2	**11.8171-0008.1**	**990049**	ATE
2.0 FSI	110	07/05→05/10		08/05→; +PR 1ZE	2	**11.8171-0008.1**	**990049**	ATE
2.0 TDI	100	07/05→05/10		08/05→ 09/09; +PR 1LU	2	**11.8171-0008.1**	**990049**	ATE
				10/09→; +PR 1LB	2	**11.8171-0008.1**	**990049**	ATE
2.0 TFSI	136	09/05→05/06		+PR 1LJ	2	**11.8171-0008.1**	**990049**	ATE

© 2022 Continental Aftermarket & Services GmbH

	kW				! #			
SEAT - LEON (1P1) 05/05→12/13								
Guide Bolt, brake caliper								
2.0 TFSI	136	09/05→05/06		+PR 1ZE	2	**11.8171-0008.1**	**990049**	ATE
				+PR 1LU	2	**11.8171-0008.1**	**990049**	ATE
2.0 TFSI	147	05/05→03/09		08/05→; +PR 1LJ	2	**11.8171-0008.1**	**990049**	ATE
				08/05→; +PR 1ZE	2	**11.8171-0008.1**	**990049**	ATE
				08/05→; +PR 1LU	2	**11.8171-0008.1**	**990049**	ATE
Brake Disc								
1.2 TSI 1.4 16V 1.4 TSI 1.6 LPG 1.6 MultiFuel 1.6 TDI 1.8 TSI 2.0 Cupra R 2.0 TDI 2.0 TFSI	77 63 92 75 75 66 - 77 118 195 125 155	02/10→12/12 06/06→12/12 11/07→12/12 12/09→12/12 07/05→08/13 02/10→12/12 06/07→12/12 09/09→12/12 05/06→12/12 06/09→12/12	←	→ 10/12; +PR 1ZE		**24.0125-0145.1**	**425145**	Ø 288 Brake Disc Thickness [mm] 25 Minimum thickness [mm] 22 Vented + S
			←	→ 10/12; +PR 1LJ		**24.0125-0158.1**	**425158**	Ø 312 Brake Disc Thickness [mm] 25 Minimum thickness [mm] 22 Vented + S
						24.0325-0158.1	**525158**	Ø 312 Brake Disc Thickness [mm] 25 Minimum thickness [mm] 22 Vented + S
			→	→ 10/12; +PR 1KS / 1KT		**24.0110-0356.1**	**410356**	Ø 272 Brake Disc Thickness [mm] 9.7 Minimum thickness [mm] 8 + S
1.6 2.0 TDI 16V	75 103	07/05→12/12 07/05→12/12	←	08/05→ 10/12; +PR 1ZE		**24.0125-0145.1**	**425145**	Ø 288 Brake Disc Thickness [mm] 25 Minimum thickness [mm] 22 Vented + S
			←	08/05→ 10/12; +PR 1LJ		**24.0125-0158.1**	**425158**	Ø 312 Brake Disc Thickness [mm] 25 Minimum thickness [mm] 22 Vented + S
						24.0325-0158.1	**525158**	Ø 312 Brake Disc Thickness [mm] 25 Minimum thickness [mm] 22 Vented + S
			→	08/05→ 10/12; +PR 1KS / 1KT		**24.0110-0356.1**	**410356**	Ø 272 Brake Disc Thickness [mm] 9.7 Minimum thickness [mm] 8 + S
1.9 TDI 2.0 TDI 2.0 TFSI	66 103 136 - 177	06/07→12/10 10/05→10/10 09/05→05/11	←	+PR 1ZE		**24.0125-0145.1**	**425145**	Ø 288 Brake Disc Thickness [mm] 25 Minimum thickness [mm] 22 Vented + S
			←	+PR 1LJ		**24.0125-0158.1**	**425158**	Ø 312 Brake Disc Thickness [mm] 25 Minimum thickness [mm] 22 Vented + S
						24.0325-0158.1	**525158**	Ø 312 Brake Disc Thickness [mm] 25 Minimum thickness [mm] 22 Vented + S
			→	+PR 1KS / 1KT		**24.0110-0356.1**	**410356**	Ø 272 Brake Disc Thickness [mm] 9.7 Minimum thickness [mm] 8 + S
1.9 TDI 2.0 FSI 2.0 TDI 2.0 TFSI	77 110 100 147	07/05→12/10 07/05→05/10 07/05→05/10 05/05→03/09	←	08/05→; +PR 1ZE		**24.0125-0145.1**	**425145**	Ø 288 Brake Disc Thickness [mm] 25 Minimum thickness [mm] 22 Vented + S
			←	08/05→; +PR 1LJ		**24.0125-0158.1**	**425158**	Ø 312 Brake Disc Thickness [mm] 25 Minimum thickness [mm] 22 Vented + S
						24.0325-0158.1	**525158**	Ø 312 Brake Disc Thickness [mm] 25 Minimum thickness [mm] 22 Vented + S
			→	08/05→; +PR 1KS / 1KT		**24.0110-0356.1**	**410356**	Ø 272 Brake Disc Thickness [mm] 9.7 Minimum thickness [mm] 8 + S
Slave Cylinder, clutch								
2.0 TDI	100	07/05→05/10		08/05→		**24.2519-1706.3**	**040096**	Ø 19
2.0 TDI	103	10/05→10/10				**24.2519-1706.3**	**040096**	Ø 19
2.0 TDI 16V	103	07/05→12/12		08/05→ 10/12		**24.2519-1706.3**	**040096**	Ø 19

SEAT - LEON (5F1) 09/12→

Brake Master Cylinder

	kW				! #			
1.0 TSi 1.5 TGi 1.5 TSI 2.0 TSI	63 96 96 - 110 140	09/18→ 10/18→ 09/18→ 09/18→		for left-hand drive vehicles		**24.4123-1719.3**	**011017**	TRW Ø 23.8 without brake fluid reservoir
				for left-hand drive vehicles; +PR 1ZA / 1ZE		**24.4123-1719.3**	**011017**	TRW Ø 23.8 without brake fluid reservoir
1.0 TSI 1.2 TSI 1.4 TSI 1.6 TDI 1.8 TSI 2.0 Cupra 2.0 TDI	85 63 - 81 90 - 110 66 - 81 132 195 - 213 81 - 135	05/15→ 12/12→ 09/12→ 11/12→ 02/13→ 10/13→ 09/12→		for left-hand drive vehicles		**24.4123-1719.3**	**011017**	TRW Ø 23.8 without brake fluid reservoir
				11/16→; for left-hand drive vehicles; +PR 1ZA / 1ZE		**24.4123-1719.3**	**011017**	TRW Ø 23.8 without brake fluid reservoir
1.4 TGI	81	02/13→		10/13→; for left-hand drive vehicles		**24.4123-1719.3**	**011017**	TRW Ø 23.8 without brake fluid reservoir
				11/16→; for left-hand drive vehicles; +PR 1ZA / 1ZE		**24.4123-1719.3**	**011017**	TRW Ø 23.8 without brake fluid reservoir
1.6 TDI	85	11/16→		01/17→; for left-hand drive vehicles		**24.4123-1719.3**	**011017**	TRW Ø 23.8 without brake fluid reservoir
				01/17→; for left-hand drive vehicles; +PR 1ZA / 1ZE		**24.4123-1719.3**	**011017**	TRW Ø 23.8 without brake fluid reservoir
2.0 Cupra 2.0 Cupra R	221 228	01/17→ 11/17→		for left-hand drive vehicles; +PR 1ZA / 1ZE		**24.4123-1719.3**	**011017**	TRW Ø 23.8 without brake fluid reservoir

Brake Caliper

1.0 TSi 1.0 TSI 1.2 TSI 1.4 TSI 1.5 TGi 1.5 TSI 1.6 TDI 1.8 TSI 2.0 Cupra 2.0 Cupra R 2.0 TDI 2.0 TSI	63 85 63 - 81 90 - 110 96 96 - 110 66 - 81 132 195 - 221 228 81 - 135 140	09/18→ 05/15→ 12/12→ 09/12→ 10/18→ 09/18→ 11/12→ 02/13→ 10/13→ 11/17→ 09/12→ 09/18→	←	+PR 1ZA;		**24.3571-1801.5**	**241387**	without holder
			←	+PR 1ZA;		**24.3571-1802.5**	**241388**	without holder
			→	+PR 1KE;		**24.6238-7023.5** **24.6238-7047.5**	**241241** **241181**	ATE without holder + eFSB ATE without holder + eFSB
			→	+PR 1KE;		**24.6238-7024.5** **24.6238-7048.5**	**241242** **241182**	ATE without holder + eFSB ATE without holder + eFSB
			→	+PR 1KJ / 1KY;		**24.6242-7017.5**	**241185**	ATE without holder + eFSB
			→	+PR 1KJ / 1KY;		**24.6242-7018.5**	**241186**	ATE without holder + eFSB
1.4 TGI	81	02/13→	←	10/13→; +PR 1ZA;		**24.3571-1801.5**	**241387**	without holder
			←	10/13→; +PR 1ZA;		**24.3571-1802.5**	**241388**	without holder
			→	10/13→; +PR 1KE;		**24.6238-7023.5** **24.6238-7047.5**	**241241** **241181**	ATE without holder + eFSB ATE without holder + eFSB
			→	10/13→; +PR 1KE;		**24.6238-7024.5** **24.6238-7048.5**	**241242** **241182**	ATE without holder + eFSB ATE without holder + eFSB
			→	10/13→; +PR 1KJ / 1KY;		**24.6242-7017.5**	**241185**	ATE without holder + eFSB
			→	10/13→; +PR 1KJ / 1KY;		**24.6242-7018.5**	**241186**	ATE without holder + eFSB
1.6 TDI	85	11/16→	←	01/17→; +PR 1ZA;		**24.3571-1801.5**	**241387**	without holder
			←	01/17→; +PR 1ZA;		**24.3571-1802.5**	**241388**	without holder
			→	01/17→; +PR 1KE;		**24.6238-7023.5** **24.6238-7047.5**	**241241** **241181**	ATE without holder + eFSB ATE without holder + eFSB
			→	01/17→; +PR 1KE;		**24.6238-7024.5** **24.6238-7048.5**	**241242** **241182**	ATE without holder + eFSB ATE without holder + eFSB
			→	01/17→; +PR 1KJ / 1KY;		**24.6242-7017.5**	**241185**	ATE without holder + eFSB
			→	01/17→; +PR 1KJ / 1KY;		**24.6242-7018.5**	**241186**	ATE without holder + eFSB

Brake Pad Set, disc brake

1.0 TSi 1.5 TGi 1.5 TSI 2.0 Cupra 2.0 TSI	63 96 96 - 110 221 140	09/18→ 10/18→ 09/18→ 01/17→ 09/18→	←	+PR 1ZA / 1ZE		**13.0460-2785.2** **13.0470-2785.2**	**602785** **LD2785**	TRW 25683 20,4 + WE / + WK TRW 25683 20,4 + WE / + WK Ceramic
			→	+PR 1KE		**13.0460-7293.2** **13.0470-7293.2**	**607293** **LD7293**	ATE 25008 16,3 - WE / - WK ATE 25008 16,3 - WE / - WK Ceramic
			→	+PR 1KJ / 1KY; + eFSB		**13.0460-7294.2**	**607294**	ATE 25009 16,4 - WE / - WK

© 2022 Continental Aftermarket & Services GmbH

SEAT - LEON (5F1) 09/12→

Brake Pad Set, disc brake

	kW				! #			
1.0 TSi 1.5 TGi 1.5 TSI 2.0 Cupra 2.0 TSI	63 96 96 - 110 221 140	09/18→ 10/18→ 09/18→ 01/17→ 09/18→	➡	+PR 1KJ / 1KY; + eFSB		**13.0470-7294.2**	**LD7294**	ATE 25009 16,4 - WE / - WK Ceramic
1.0 TSI 1.2 TSI	85 63 - 81	05/15→ 12/12→	⬅	+PR 1LG		**13.0460-2617.2** **13.0470-2617.2**	**602617** **LD2617**	TRW + WK TRW + WK Ceramic
1.4 TSI	90 - 110	09/12→	⬅	+PR 1ZA / 1ZE		**13.0460-2785.2** **13.0470-2785.2**	**602785** **LD2785**	TRW 25683 20,4 + WE / + WK TRW 25683 20,4 + WE / + WK Ceramic
1.6 TDI	66 - 81	11/12→						
1.8 TSI 2.0 TDI	132 81 - 135	02/13→ 09/12→	➡	+PR 1KE		**13.0460-7293.2** **13.0470-7293.2**	**607293** **LD7293**	ATE 25008 16,3 - WE / - WK ATE 25008 16,3 - WE / - WK Ceramic
			➡	+PR 1KJ / 1KY; + eFSB		**13.0460-7294.2** **13.0470-7294.2**	**607294** **LD7294**	ATE 25009 16,4 - WE / - WK ATE 25009 16,4 - WE / - WK Ceramic
1.4 TGI	81	02/13→	⬅	10/13→; +PR 1LG		**13.0460-2617.2** **13.0470-2617.2**	**602617** **LD2617**	TRW + WK TRW + WK Ceramic
			⬅	+PR 1ZA / 1ZE		**13.0460-2785.2** **13.0470-2785.2**	**602785** **LD2785**	TRW 25683 20,4 + WE / + WK TRW 25683 20,4 + WE / + WK Ceramic
			➡	10/13→; +PR 1KE		**13.0460-7293.2** **13.0470-7293.2**	**607293** **LD7293**	ATE 25008 16,3 - WE / - WK ATE 25008 16,3 - WE / - WK Ceramic
			➡	10/13→; +PR 1KJ / 1KY; + eFSB		**13.0460-7294.2** **13.0470-7294.2**	**607294** **LD7294**	ATE 25009 16,4 - WE / - WK ATE 25009 16,4 - WE / - WK Ceramic
1.6 TDI	77	11/12→	⬅	+PR 1LJ / 1LG		**13.0460-2617.2** **13.0470-2617.2**	**602617** **LD2617**	TRW + WK TRW + WK Ceramic
			⬅	+PR 1ZA / 1ZE		**13.0460-2785.2** **13.0470-2785.2**	**602785** **LD2785**	TRW 25683 20,4 + WE / + WK TRW 25683 20,4 + WE / + WK Ceramic
			➡	+PR 1KE		**13.0460-7293.2** **13.0470-7293.2**	**607293** **LD7293**	ATE 25008 16,3 - WE / - WK ATE 25008 16,3 - WE / - WK Ceramic
			➡	+PR 1KJ / 1KY; + eFSB		**13.0460-7294.2** **13.0470-7294.2**	**607294** **LD7294**	ATE 25009 16,4 - WE / - WK ATE 25009 16,4 - WE / - WK Ceramic
1.6 TDI	85	11/16→	⬅	+PR 1ZA / 1ZE		**13.0460-2785.2** **13.0470-2785.2**	**602785** **LD2785**	TRW 25683 20,4 + WE / + WK TRW 25683 20,4 + WE / + WK Ceramic
			➡	01/17→; +PR 1KE		**13.0460-7293.2** **13.0470-7293.2**	**607293** **LD7293**	ATE 25008 16,3 - WE / - WK ATE 25008 16,3 - WE / - WK Ceramic
			➡	01/17→; +PR 1KJ / 1KY; + eFSB		**13.0460-7294.2** **13.0470-7294.2**	**607294** **LD7294**	ATE 25009 16,4 - WE / - WK ATE 25009 16,4 - WE / - WK Ceramic
2.0 Cupra	195 - 213	10/13→	⬅	+PR 1LD / 1LJ		**13.0460-2617.2** **13.0470-2617.2**	**602617** **LD2617**	TRW + WK TRW + WK Ceramic
			⬅	+PR 1ZA / 1ZE		**13.0460-2785.2** **13.0470-2785.2**	**602785** **LD2785**	TRW 25683 20,4 + WE / + WK TRW 25683 20,4 + WE / + WK Ceramic
			➡	+PR 1KE		**13.0460-7293.2** **13.0470-7293.2**	**607293** **LD7293**	ATE 25008 16,3 - WE / - WK ATE 25008 16,3 - WE / - WK Ceramic
			➡	+PR 1KJ / 1KY; + eFSB		**13.0460-7294.2** **13.0470-7294.2**	**607294** **LD7294**	ATE 25009 16,4 - WE / - WK ATE 25009 16,4 - WE / - WK Ceramic
2.0 Cupra R	228	11/17→	⬅	+PR 1ZA / 1ZE		**13.0460-2785.2**	**602785**	TRW 25683 20,4 + WE / + WK
			➡	+PR 1KE		**13.0460-7293.2**	**607293**	ATE 25008 16,3 - WE / - WK
			➡	+PR 1KJ / 1KY; + eFSB		**13.0460-7294.2**	**607294**	ATE 25009 16,4 - WE / - WK

Warning Contact, brake pad wear

1.0 TSi 1.0 TSI 1.2 TSI	63 85 63 - 81	09/18→ 05/15→ 12/12→	⬅	+PR 1ZA / 1ZE	1	**24.8190-0065.2**	**620065**	

	kW				! #			
SEAT - LEON (5F1) 09/12→								
Warning Contact, brake pad wear								
1.4 TSI 1.5 TGi 1.5 TSI 1.6 TDI 1.8 TSI 2.0 Cupra 2.0 Cupra R 2.0 TDI 2.0 TSI	90 - 110 96 96 - 110 66 - 81 132 195 - 221 228 81 - 135 140	09/12→ 10/18→ 09/18→ 11/12→ 02/13→ 10/13→ 11/17→ 09/12→ 09/18→	←	+PR 1ZA / 1ZE	1	**24.8190-0065.2**	**620065**	
1.4 TGI	81	02/13→	←	10/13→; +PR 1ZA / 1ZE	1	**24.8190-0065.2**	**620065**	
1.6 TDI	85	11/16→	←	01/17→; +PR 1ZA / 1ZE	1	**24.8190-0065.2**	**620065**	
Brake Disc								
1.0 TSi 1.5 TGi 1.5 TSI 2.0 Cupra 2.0 Cupra R 2.0 TSI	63 96 96 - 110 221 228 140	09/18→ 10/18→ 09/18→ 01/17→ 11/17→ 09/18→	←	+PR 1ZE		**24.0125-0145.1**	**425145**	Ø 288 Brake Disc Thickness [mm] 25 Minimum thickness [mm] 22 Vented + S
			←	+PR 1ZA		**24.0125-0158.1** **24.0325-0158.1**	**425158** **525158**	Ø 312 Brake Disc Thickness [mm] 25 Minimum thickness [mm] 22 Vented + S Ø 312 Brake Disc Thickness [mm] 25 Minimum thickness [mm] 22 Vented + S
			→	+PR 1KS / 1KE		**24.0110-0356.1**	**410356**	Ø 272 Brake Disc Thickness [mm] 9.7 Minimum thickness [mm] 8 + S
			→	+PR 1KF / 1KJ / 1KW / 1KY		**24.0122-0219.1**	**422219**	Ø 310 Brake Disc Thickness [mm] 22 Minimum thickness [mm] 20 Vented
1.0 TSI 1.2 TSI 1.4 TSI 1.6 TDI 1.8 TSI 2.0 TDI	85 63 - 81 90 - 110 66 - 81 132 110 - 135	05/15→ 12/12→ 09/12→ 11/12→ 02/13→ 09/12→	←	+PR 1ZE		**24.0125-0145.1**	**425145**	Ø 288 Brake Disc Thickness [mm] 25 Minimum thickness [mm] 22 Vented + S
			←	+PR 1ZA		**24.0125-0158.1** **24.0325-0158.1**	**425158** **525158**	Ø 312 Brake Disc Thickness [mm] 25 Minimum thickness [mm] 22 Vented + S Ø 312 Brake Disc Thickness [mm] 25 Minimum thickness [mm] 22 Vented + S
			←	+PR 1LG		**24.0130-0225.1**	**430225**	Ø 340 Brake Disc Thickness [mm] 30 Minimum thickness [mm] 27 Vented + S
			→	+PR 1KS / 1KE		**24.0110-0356.1**	**410356**	Ø 272 Brake Disc Thickness [mm] 9.7 Minimum thickness [mm] 8 + S
			→	+PR 1KF / 1KJ / 1KW / 1KY		**24.0122-0219.1**	**422219**	Ø 310 Brake Disc Thickness [mm] 22 Minimum thickness [mm] 20 Vented
1.2 TSI	77	01/13→	←	+PR 1ZE		**24.0125-0145.1**	**425145**	Ø 288 Brake Disc Thickness [mm] 25 Minimum thickness [mm] 22 Vented + S
			←	+PR 1ZA		**24.0125-0158.1** **24.0325-0158.1**	**425158** **525158**	Ø 312 Brake Disc Thickness [mm] 25 Minimum thickness [mm] 22 Vented + S Ø 312 Brake Disc Thickness [mm] 25 Minimum thickness [mm] 22 Vented + S
			←	+PR 1LJ / 1LG		**24.0130-0225.1**	**430225**	Ø 340 Brake Disc Thickness [mm] 30 Minimum thickness [mm] 27 Vented + S

© 2022 Continental Aftermarket & Services GmbH

	kW				! #			
SEAT - LEON (5F1) 09/12→								
Brake Disc								
1.2 TSI	77	01/13→	➡	+PR 1KS / 1KE		**24.0110-0356.1**	**410356**	Ø 272 Brake Disc Thickness [mm] 9.7 Minimum thickness [mm] 8 + S
			➡	+PR 1KF / 1KJ / 1KW / 1KY		**24.0122-0219.1**	**422219**	Ø 310 Brake Disc Thickness [mm] 22 Minimum thickness [mm] 20 Vented
1.4 TGI	81	02/13→	⬅	10/13→; +PR 1ZE		**24.0125-0145.1**	**425145**	Ø 288 Brake Disc Thickness [mm] 25 Minimum thickness [mm] 22 Vented + S
			⬅	10/13→; +PR 1ZA		**24.0125-0158.1** **24.0325-0158.1**	**425158** **525158**	Ø 312 Brake Disc Thickness [mm] 25 Minimum thickness [mm] 22 Vented + S Ø 312 Brake Disc Thickness [mm] 25 Minimum thickness [mm] 22 Vented + S
			⬅	10/13→; +PR 1LG		**24.0130-0225.1**	**430225**	Ø 340 Brake Disc Thickness [mm] 30 Minimum thickness [mm] 27 Vented + S
			➡	10/13→; +PR 1KS / 1KE		**24.0110-0356.1**	**410356**	Ø 272 Brake Disc Thickness [mm] 9.7 Minimum thickness [mm] 8 + S
			➡	10/13→; +PR 1KF / 1KJ / 1KW / 1KY		**24.0122-0219.1**	**422219**	Ø 310 Brake Disc Thickness [mm] 22 Minimum thickness [mm] 20 Vented
1.6 TDI	85	11/16→	⬅	01/17→; +PR 1ZE		**24.0125-0145.1**	**425145**	Ø 288 Brake Disc Thickness [mm] 25 Minimum thickness [mm] 22 Vented + S
			⬅	01/17→; +PR 1ZA		**24.0125-0158.1** **24.0325-0158.1**	**425158** **525158**	Ø 312 Brake Disc Thickness [mm] 25 Minimum thickness [mm] 22 Vented + S Ø 312 Brake Disc Thickness [mm] 25 Minimum thickness [mm] 22 Vented + S
			➡	+PR 1KS / 1KE		**24.0110-0356.1**	**410356**	Ø 272 Brake Disc Thickness [mm] 9.7 Minimum thickness [mm] 8 + S
			➡	01/17→; +PR 1KF / 1KJ / 1KW / 1KY		**24.0122-0219.1**	**422219**	Ø 310 Brake Disc Thickness [mm] 22 Minimum thickness [mm] 20 Vented
2.0 Cupra	195 - 213	10/13→	⬅	+PR 1ZE		**24.0125-0145.1**	**425145**	Ø 288 Brake Disc Thickness [mm] 25 Minimum thickness [mm] 22 Vented + S
			⬅	+PR 1ZA		**24.0125-0158.1** **24.0325-0158.1**	**425158** **525158**	Ø 312 Brake Disc Thickness [mm] 25 Minimum thickness [mm] 22 Vented + S Ø 312 Brake Disc Thickness [mm] 25 Minimum thickness [mm] 22 Vented + S
			⬅	+PR 1LD / 1LJ		**24.0130-0225.1**	**430225**	Ø 340 Brake Disc Thickness [mm] 30 Minimum thickness [mm] 27 Vented + S
			➡	+PR 1KS / 1KE		**24.0110-0356.1**	**410356**	Ø 272 Brake Disc Thickness [mm] 9.7 Minimum thickness [mm] 8 + S
			➡	+PR 1KF / 1KJ / 1KW / 1KY		**24.0122-0219.1**	**422219**	Ø 310 Brake Disc Thickness [mm] 22 Minimum thickness [mm] 20 Vented
2.0 TDI	81 - 105	05/13→	⬅	+PR 1ZE		**24.0125-0145.1**	**425145**	Ø 288 Brake Disc Thickness [mm] 25 Minimum thickness [mm] 22 Vented + S

SEAT - LEON (5F1) 09/12→

	kW				! #			
Brake Disc								
2.0 TDI	81 - 105	05/13→	←	+PR 1ZA		**24.0125-0158.1**	**425158**	Ø 312 Brake Disc Thickness [mm] 25 Minimum thickness [mm] 22 Vented + S
			←	+PR 1LG		**24.0130-0225.1**	**430225**	Ø 340 Brake Disc Thickness [mm] 30 Minimum thickness [mm] 27 Vented + S
			→	+PR 1KS / 1KE		**24.0110-0356.1**	**410356**	Ø 272 Brake Disc Thickness [mm] 9.7 Minimum thickness [mm] 8 + S
			→	+PR 1KF / 1KJ / 1KW / 1KY		**24.0122-0219.1**	**422219**	Ø 310 Brake Disc Thickness [mm] 22 Minimum thickness [mm] 20 Vented
Sensor, wheel speed								
1.0 TSi 1.0 TSI 1.2 TSI 1.4 TSI 1.5 TGi 1.5 TSI 1.6 TDI 1.8 TSI 2.0 Cupra 2.0 Cupra R 2.0 TDI 2.0 TSI	63 85 63 - 81 90 - 110 96 96 - 110 66 - 81 132 195 - 221 228 81 - 135 140	09/18→ 05/15→ 12/12→ 09/12→ 10/18→ 09/18→ 11/12→ 02/13→ 10/13→ 11/17→ 09/12→ 09/18→	←	⊞		**24.0711-5273.3**	**360303**	
			←	⊟		**24.0711-5274.3**	**360304**	
			→	for vehicles with autom. distance control	2	**24.0711-6337.3**	**360390**	
1.4 TGI	81	02/13→	←	10/13→; ⊞		**24.0711-5273.3**	**360303**	
			←	10/13→; ⊟		**24.0711-5274.3**	**360304**	
			→	10/13→; for vehicles with autom. distance control	2	**24.0711-6337.3**	**360390**	
1.6 TDI	85	11/16→	←	01/17→; ⊞		**24.0711-5273.3**	**360303**	
			←	01/17→; ⊟		**24.0711-5274.3**	**360304**	
			→	01/17→; for vehicles with autom. distance control	2	**24.0711-6337.3**	**360390**	
Slave Cylinder, clutch								
1.0 TSi 1.0 TSI 1.2 TSI 1.4 TSI 1.5 TGi 1.5 TSI 1.6 TDI 1.8 TSI 2.0 Cupra 2.0 Cupra R 2.0 TDI 2.0 TSI	63 85 63 - 81 90 - 110 96 96 - 110 66 - 81 132 195 - 213 228 81 - 135 140	09/18→ 05/15→ 12/12→ 09/12→ 10/18→ 09/18→ 11/12→ 02/13→ 10/13→ 11/17→ 09/12→ 09/18→		for left-hand drive vehicles; +PR 0EC / 0EM		**24.2519-1706.3**	**040096**	Ø 19
1.4 TGI	81	02/13→		10/13→; for left-hand drive vehicles; +PR 0EC / 0EM		**24.2519-1706.3**	**040096**	Ø 19
1.6 TDI	85	11/16→		01/17→; for left-hand drive vehicles; +PR 0EC / 0EM		**24.2519-1706.3**	**040096**	Ø 19
Control Element, parking brake caliper								
1.0 TSi 1.0 TSI 1.2 TSI 1.4 TSI 1.5 TGi 1.5 TSI	63 85 63 - 81 90 - 110 96 96 - 110	09/18→ 05/15→ 12/12→ 09/12→ 10/18→ 09/18→	→	+PR 1KE / 1KJ / 1KY; ⊞		**11.9282-1001.3**	**250159**	ATE
			→	+PR 1KE / 1KJ / 1KY; ⊟		**11.9282-1002.3**	**250160**	ATE

© 2022 Continental Aftermarket & Services GmbH

	kW				! #			
SEAT - LEON (5F1) 09/12→								
Control Element, parking brake caliper								
1.6 TDI	66 - 81	11/12→	➡	+PR 1KE / 1KJ / 1KY;		**11.9282-1001.3**	**250159**	ATE
1.8 TSI 2.0 Cupra 2.0 Cupra R 2.0 TDI 2.0 TSI	132 195 - 221 228 81 - 135 140	02/13→ 10/13→ 11/17→ 09/12→ 09/18→	➡	+PR 1KE / 1KJ / 1KY;		**11.9282-1002.3**	**250160**	ATE
1.4 TGI	81	02/13→	➡	10/13→; +PR 1KE / 1KJ / 1KY;		**11.9282-1001.3**	**250159**	ATE
			➡	10/13→; +PR 1KE / 1KJ / 1KY;		**11.9282-1002.3**	**250160**	ATE
1.6 TDI	85	11/16→	➡	01/17→; +PR 1KE / 1KJ / 1KY;		**11.9282-1001.3**	**250159**	ATE
			➡	01/17→; +PR 1KE / 1KJ / 1KY;		**11.9282-1002.3**	**250160**	ATE
SEAT - LEON (KL1) 11/19→								
Brake Caliper								
1.0 TSI	66 - 81	03/20→	⬅	+PR 1ZK;		**24.3571-1801.5**	**241387**	without holder
1.0 TSI Mild Hybrid 1.4 TSI e-Hybrid 1.5 eTSI 1.5 TGI CNG 1.5 TSI 2.0 TDI 2.0 TFSI	81 110 - 150 110 96 96 - 110 85 - 110 140	08/20→ 05/20→ 11/19→ 08/20→ 11/19→ 11/19→ 03/21→	⬅	+PR 1ZK;		**24.3571-1802.5**	**241388**	without holder
Brake Pad Set, disc brake								
1.0 TSI	66 - 81	03/20→	⬅	+PR 1ZK		**13.0460-2785.2** **13.0470-2785.2**	**602785** **LD2785**	TRW 25683 20,4 + WE / + WK TRW 25683 20,4 + WE / + WK Ceramic
1.0 TSI Mild Hybrid 1.4 TSI e-Hybrid 1.5 eTSI 1.5 TGI CNG 1.5 TSI 2.0 TDI 2.0 TFSI	81 110 - 150 110 96 96 - 110 85 - 110 140	08/20→ 05/20→ 11/19→ 08/20→ 11/19→ 11/19→ 03/21→						
Warning Contact, brake pad wear								
1.0 TSI	66 - 81	03/20→	⬅	+PR 1ZK	1	**24.8190-0065.2**	**620065**	
1.0 TSI Mild Hybrid 1.4 TSI e-Hybrid 1.5 eTSI 1.5 TGI CNG 1.5 TSI 2.0 TDI 2.0 TFSI	81 110 - 150 110 96 96 - 110 85 - 110 140	08/20→ 05/20→ 11/19→ 08/20→ 11/19→ 11/19→ 03/21→						
Brake Disc								
1.0 TSI	66 - 81	03/20→	⬅	+PR 1ZE		**24.0125-0145.1**	**425145**	Ø 288 Brake Disc Thickness [mm] 25 Minimum thickness [mm] 22 Vented + S
1.0 TSI Mild Hybrid 1.4 TSI e-Hybrid	81 110 - 150	08/20→ 05/20→						
1.5 eTSI 1.5 TGI CNG 1.5 TSI	110 96 96 - 110	11/19→ 08/20→ 11/19→	⬅	+PR 1ZK		**24.0125-0158.1**	**425158**	Ø 312 Brake Disc Thickness [mm] 25 Minimum thickness [mm] 22 Vented + S
2.0 TDI 2.0 TFSI	85 - 110 140	11/19→ 03/21→	➡	+PR 1KE		**24.0110-0356.1**	**410356**	Ø 272 Brake Disc Thickness [mm] 9.7 Minimum thickness [mm] 8 + S
Sensor, wheel speed								
1.0 TSI	66 - 81	03/20→	⬅			**24.0711-5273.3**	**360303**	
1.0 TSI Mild Hybrid	81	08/20→	⬅			**24.0711-5274.3**	**360304**	
1.4 TSI e-Hybrid 1.5 eTSI 1.5 TGI CNG	110 - 150 110 96	05/20→ 11/19→ 08/20→	➡		2	**24.0711-6337.3**	**360390**	

© 2022 Continental Aftermarket & Services GmbH

	kW				! #			
SEAT - LEON (KL1) 11/19→								
Sensor, wheel speed								
1.5 TSI	96 - 110	11/19→	←			**24.0711-5273.3**	**360303**	
2.0 TDI	85 - 110	11/19→	←			**24.0711-5274.3**	**360304**	
2.0 TFSI	140	03/21→	→		2	**24.0711-6337.3**	**360390**	
SEAT - LEON Hatchback Van (5F1) 09/12→								
Brake Master Cylinder								
1.0 TSI 1.2 TSI	85 63 - 81	05/15→ 01/13→		for left-hand drive vehicles		**24.4123-1719.3**	**011017**	TRW Ø 23.8 without brake fluid reservoir
1.4 TSI 1.8 TFSI 2.0 TDI	110 132 110 - 135	05/14→ 02/13→ 10/12→		11/16→; for left-hand drive vehicles; +PR 1ZA / 1ZE		**24.4123-1719.3**	**011017**	TRW Ø 23.8 without brake fluid reservoir
1.4 TSI 1.6 TDI 2.0 Cupra	90 - 103 66 - 81 213	09/12→10/16 09/12→10/16 09/15→10/16		for left-hand drive vehicles; +PR 1ZA / 1ZE		**24.4123-1719.3**	**011017**	TRW Ø 23.8 without brake fluid reservoir
1.6 TDI	85	11/16→		01/17→; for left-hand drive vehicles		**24.4123-1719.3**	**011017**	TRW Ø 23.8 without brake fluid reservoir
				01/17→; for left-hand drive vehicles; +PR 1ZA / 1ZE		**24.4123-1719.3**	**011017**	TRW Ø 23.8 without brake fluid reservoir
2.0 Cupra	221	01/17→		for left-hand drive vehicles		**24.4123-1719.3**	**011017**	TRW Ø 23.8 without brake fluid reservoir
				for left-hand drive vehicles; +PR 1ZA / 1ZE		**24.4123-1719.3**	**011017**	TRW Ø 23.8 without brake fluid reservoir
Brake Caliper								
1.0 TSI 1.2 TSI 1.4 TSI	85 81 90 - 110	05/15→ 04/14→ 09/12→	←	+PR 1ZA;		**24.3571-1801.5**	**241387**	without holder
			←	+PR 1ZA;		**24.3571-1802.5**	**241388**	without holder
1.6 TDI	66 - 81	09/12→10/16	→	+PR 1KE;		**24.6238-7023.5** **24.6238-7047.5**	**241241** **241181**	ATE without holder + eFSB ATE without holder + eFSB
1.8 TFSI 2.0 Cupra	132 213 - 221	02/13→ 09/15→	→	+PR 1KE;		**24.6238-7024.5** **24.6238-7048.5**	**241242** **241182**	ATE without holder + eFSB ATE without holder + eFSB
2.0 TDI	110 - 135	10/12→	→	+PR 1KJ / 1KY;		**24.6242-7017.5**	**241185**	ATE without holder + eFSB
			→	+PR 1KJ / 1KY;		**24.6242-7018.5**	**241186**	ATE without holder + eFSB
1.2 TSI	63	01/13→	←	04/14→; +PR 1ZA;		**24.3571-1801.5**	**241387**	without holder
			←	04/14→; +PR 1ZA;		**24.3571-1802.5**	**241388**	without holder
			→	04/14→; +PR 1KE;		**24.6238-7023.5** **24.6238-7047.5**	**241241** **241181**	ATE without holder + eFSB ATE without holder + eFSB
			→	04/14→; +PR 1KE;		**24.6238-7024.5** **24.6238-7048.5**	**241242** **241182**	ATE without holder + eFSB ATE without holder + eFSB
			→	04/14→; +PR 1KJ / 1KY;		**24.6242-7017.5**	**241185**	ATE without holder + eFSB
			→	04/14→; +PR 1KJ / 1KY;		**24.6242-7018.5**	**241186**	ATE without holder + eFSB
1.6 TDI	85	11/16→	←	01/17→; +PR 1ZA;		**24.3571-1801.5**	**241387**	without holder
			←	01/17→; +PR 1ZA;		**24.3571-1802.5**	**241388**	without holder
			→	01/17→; +PR 1KE;		**24.6238-7023.5** **24.6238-7047.5**	**241241** **241181**	ATE without holder + eFSB ATE without holder + eFSB
			→	01/17→; +PR 1KE;		**24.6238-7024.5** **24.6238-7048.5**	**241242** **241182**	ATE without holder + eFSB ATE without holder + eFSB
			→	01/17→; +PR 1KJ / 1KY;		**24.6242-7017.5**	**241185**	ATE without holder + eFSB
			→	01/17→; +PR 1KJ / 1KY;		**24.6242-7018.5**	**241186**	ATE without holder + eFSB
Brake Pad Set, disc brake								
1.0 TSI 1.2 TSI 1.4 TSI	85 81 90 - 110	05/15→ 04/14→ 09/12→	←	+PR 1LG		**13.0460-2617.2** **13.0470-2617.2**	**602617** **LD2617**	TRW + WK TRW + WK Ceramic
1.6 TDI	66 - 81	11/12→10/16	←	+PR 1ZA / 1ZE		**13.0460-2785.2** **13.0470-2785.2**	**602785** **LD2785**	TRW 25683 20,4 + WE / + WK TRW 25683 20,4 + WE / + WK Ceramic
1.8 TFSI 2.0 TDI	132 110 - 135	02/13→ 10/12→	→	+PR 1KE		**13.0460-7293.2** **13.0470-7293.2**	**607293** **LD7293**	ATE 25008 16,3 - WE / - WK ATE 25008 16,3 - WE / - WK Ceramic
			→	+PR 1KJ / 1KY; + eFSB		**13.0460-7294.2**	**607294**	ATE 25009 16,4 - WE / - WK

© 2022 Continental Aftermarket & Services GmbH

	kW				! #			
SEAT - LEON Hatchback Van (5F1) 09/12→								
Brake Pad Set, disc brake								
1.0 TSI 1.2 TSI 1.4 TSI 1.6 TDI 1.8 TFSI 2.0 TDI	85 81 90 - 110 66 - 81 132 110 - 135	05/15→ 04/14→ 09/12→ 11/12→10/16 02/13→ 10/12→	➡	+PR 1KJ / 1KY; + eFSB		**13.0470-7294.2**	**LD7294**	ATE 25009 16,4 - WE / - WK Ceramic
1.2 TSI	63	01/13→	⬅	04/14→; +PR 1LG		**13.0460-2617.2** **13.0470-2617.2**	**602617** **LD2617**	TRW + WK TRW + WK Ceramic
			⬅	04/14→; +PR 1ZA / 1ZE		**13.0460-2785.2** **13.0470-2785.2**	**602785** **LD2785**	TRW 25683 20,4 + WE / + WK TRW 25683 20,4 + WE / + WK Ceramic
			➡	+PR 1KE		**13.0460-7293.2** **13.0470-7293.2**	**607293** **LD7293**	ATE 25008 16,3 - WE / - WK ATE 25008 16,3 - WE / - WK Ceramic
			➡	+PR 1KJ / 1KY; + eFSB		**13.0460-7294.2** **13.0470-7294.2**	**607294** **LD7294**	ATE 25009 16,4 - WE / - WK ATE 25009 16,4 - WE / - WK Ceramic
1.6 TDI	77	09/12→10/16	⬅	+PR 1LJ / 1LG		**13.0460-2617.2** **13.0470-2617.2**	**602617** **LD2617**	TRW + WK TRW + WK Ceramic
			⬅	+PR 1ZA / 1ZE		**13.0460-2785.2** **13.0470-2785.2**	**602785** **LD2785**	TRW 25683 20,4 + WE / + WK TRW 25683 20,4 + WE / + WK Ceramic
			➡	+PR 1KE		**13.0460-7293.2** **13.0470-7293.2**	**607293** **LD7293**	ATE 25008 16,3 - WE / - WK ATE 25008 16,3 - WE / - WK Ceramic
			➡	+PR 1KJ / 1KY; + eFSB		**13.0460-7294.2** **13.0470-7294.2**	**607294** **LD7294**	ATE 25009 16,4 - WE / - WK ATE 25009 16,4 - WE / - WK Ceramic
1.6 TDI	85	11/16→	⬅	+PR 1ZA / 1ZE		**13.0460-2785.2** **13.0470-2785.2**	**602785** **LD2785**	TRW 25683 20,4 + WE / + WK TRW 25683 20,4 + WE / + WK Ceramic
			➡	01/17→; +PR 1KE		**13.0460-7293.2** **13.0470-7293.2**	**607293** **LD7293**	ATE 25008 16,3 - WE / - WK ATE 25008 16,3 - WE / - WK Ceramic
			➡	01/17→; +PR 1KJ / 1KY; + eFSB		**13.0460-7294.2** **13.0470-7294.2**	**607294** **LD7294**	ATE 25009 16,4 - WE / - WK ATE 25009 16,4 - WE / - WK Ceramic
2.0 Cupra	213 - 221	09/15→	⬅	+PR 1LD / 1LJ		**13.0460-2617.2** **13.0470-2617.2**	**602617** **LD2617**	TRW + WK TRW + WK Ceramic
			⬅	+PR 1ZA / 1ZE		**13.0460-2785.2** **13.0470-2785.2**	**602785** **LD2785**	TRW 25683 20,4 + WE / + WK TRW 25683 20,4 + WE / + WK Ceramic
			➡	+PR 1KE		**13.0460-7293.2** **13.0470-7293.2**	**607293** **LD7293**	ATE 25008 16,3 - WE / - WK ATE 25008 16,3 - WE / - WK Ceramic
			➡	+PR 1KJ / 1KY; + eFSB		**13.0460-7294.2** **13.0470-7294.2**	**607294** **LD7294**	ATE 25009 16,4 - WE / - WK ATE 25009 16,4 - WE / - WK Ceramic
Warning Contact, brake pad wear								
1.0 TSI 1.2 TSI 1.4 TSI 1.6 TDI 1.8 TFSI 2.0 Cupra 2.0 TDI	85 63 - 81 90 - 110 66 - 81 132 213 - 221 110 - 135	05/15→ 01/13→ 09/12→ 09/12→10/16 02/13→ 09/15→ 10/12→	⬅	+PR 1ZA / 1ZE	1	**24.8190-0065.2**	**620065**	
1.6 TDI	85	11/16→	⬅	01/17→; +PR 1ZA / 1ZE	1	**24.8190-0065.2**	**620065**	
Brake Disc								
1.0 TSI 1.2 TSI	85 63 - 81	05/15→ 01/13→	⬅	+PR 1ZE		**24.0125-0145.1**	**425145**	Ø 288 Brake Disc Thickness [mm] 25 Minimum thickness [mm] 22 Vented + S

SEAT - LEON Hatchback Van (5F1) 09/12→

Brake Disc

	kW				! #			
1.4 TSI 1.6 TDI 1.8 TFSI 2.0 TDI	90 - 110 66 - 81 132 110 - 135	09/12→ 09/12→10/16 02/13→ 10/12→	←	+PR 1ZA		**24.0125-0158.1**	**425158**	Ø 312 Brake Disc Thickness [mm] 25 Minimum thickness [mm] 22 Vented + S
			←	+PR 1LG		**24.0130-0225.1**	**430225**	Ø 340 Brake Disc Thickness [mm] 30 Minimum thickness [mm] 27 Vented + S
			→	+PR 1KS / 1KE		**24.0110-0356.1**	**410356**	Ø 272 Brake Disc Thickness [mm] 9.7 Minimum thickness [mm] 8 + S
			→	+PR 1KF / 1KJ / 1KW / 1KY		**24.0122-0219.1**	**422219**	Ø 310 Brake Disc Thickness [mm] 22 Minimum thickness [mm] 20 Vented
1.6 TDI	85	11/16→	←	01/17→; +PR 1ZE		**24.0125-0145.1**	**425145**	Ø 288 Brake Disc Thickness [mm] 25 Minimum thickness [mm] 22 Vented + S
			←	01/17→; +PR 1ZA		**24.0125-0158.1**	**425158**	Ø 312 Brake Disc Thickness [mm] 25 Minimum thickness [mm] 22 Vented + S
			→	+PR 1KS / 1KE		**24.0110-0356.1**	**410356**	Ø 272 Brake Disc Thickness [mm] 9.7 Minimum thickness [mm] 8 + S
			→	01/17→; +PR 1KF / 1KJ / 1KW / 1KY		**24.0122-0219.1**	**422219**	Ø 310 Brake Disc Thickness [mm] 22 Minimum thickness [mm] 20 Vented
2.0 Cupra	213 - 221	09/15→	←	+PR 1ZE		**24.0125-0145.1**	**425145**	Ø 288 Brake Disc Thickness [mm] 25 Minimum thickness [mm] 22 Vented + S
			←	+PR 1ZA		**24.0125-0158.1**	**425158**	Ø 312 Brake Disc Thickness [mm] 25 Minimum thickness [mm] 22 Vented + S
			←	+PR 1LD / 1LJ		**24.0130-0225.1**	**430225**	Ø 340 Brake Disc Thickness [mm] 30 Minimum thickness [mm] 27 Vented + S
			→	+PR 1KS / 1KE		**24.0110-0356.1**	**410356**	Ø 272 Brake Disc Thickness [mm] 9.7 Minimum thickness [mm] 8 + S
			→	+PR 1KF / 1KJ / 1KW / 1KY		**24.0122-0219.1**	**422219**	Ø 310 Brake Disc Thickness [mm] 22 Minimum thickness [mm] 20 Vented

Sensor, wheel speed

1.0 TSI 1.2 TSI 1.4 TSI 1.6 TDI 1.8 TFSI 2.0 Cupra 2.0 TDI	85 63 - 81 90 - 110 66 - 81 132 213 - 221 110 - 135	05/15→ 01/13→ 09/12→ 09/12→10/16 02/13→ 09/15→ 10/12→	←	⊞		**24.0711-5273.3**	**360303**	
			←	⊟		**24.0711-5274.3**	**360304**	
			→	for vehicles with autom. distance control	2	**24.0711-6337.3**	**360390**	
1.6 TDI	85	11/16→	←	01/17→; ⊞		**24.0711-5273.3**	**360303**	
			←	01/17→; ⊟		**24.0711-5274.3**	**360304**	
			→	01/17→; for vehicles with autom. distance control	2	**24.0711-6337.3**	**360390**	

Slave Cylinder, clutch

1.0 TSI 1.2 TSI 1.4 TSI 1.6 TDI 1.8 TFSI	85 63 - 81 90 - 110 66 - 81 132	05/15→ 01/13→ 09/12→ 09/12→10/16 02/13→		for left-hand drive vehicles; +PR 0EC / 0EM		**24.2519-1706.3**	**040096**	Ø 19

© 2022 Continental Aftermarket & Services GmbH

	kW				! #			
SEAT - LEON Hatchback Van (5F1) 09/12→								
Slave Cylinder, clutch								
2.0 Cupra 2.0 TDI	213 - 221 110 - 135	09/15→ 10/12→		for left-hand drive vehicles; +PR 0EC / 0EM		**24.2519-1706.3**	**040096**	Ø 19
1.6 TDI	85	11/16→		01/17→; for left-hand drive vehicles; +PR 0EC / 0EM		**24.2519-1706.3**	**040096**	Ø 19
Control Element, parking brake caliper								
1.0 TSI 1.2 TSI 1.4 TSI 1.6 TDI 1.8 TFSI 2.0 Cupra 2.0 TDI	85 63 - 81 90 - 110 66 - 81 132 213 - 221 110 - 135	05/15→ 01/13→ 09/12→ 09/12→10/16 02/13→ 09/15→ 10/12→	➡	+PR 1KE / 1KJ / 1KY; ◪		**11.9282-1001.3**	**250159**	ATE
			➡	+PR 1KE / 1KJ / 1KY; ◩		**11.9282-1002.3**	**250160**	ATE
1.6 TDI	85	11/16→	➡	01/17→; +PR 1KE / 1KJ / 1KY; ◪		**11.9282-1001.3**	**250159**	ATE
			➡	01/17→; +PR 1KE / 1KJ / 1KY; ◩		**11.9282-1002.3**	**250160**	ATE
SEAT - LEON SC (5F5) 01/13→								
Brake Master Cylinder								
1.0 TSI 1.2 TSI 1.4 TSI 1.6 TDI 1.8 TSI 2.0 Cupra 2.0 TDI	85 63 - 81 92 - 110 66 - 81 132 195 - 213 81 - 135	05/15→08/18 01/13→08/18 02/13→08/18 02/13→08/18 02/13→08/18 10/13→11/16 02/13→		for left-hand drive vehicles		**24.4123-1719.3**	**011017**	TRW Ø 23.8 without brake fluid reservoir
				11/16→; for left-hand drive vehicles; +PR 1ZA / 1ZE		**24.4123-1719.3**	**011017**	TRW Ø 23.8 without brake fluid reservoir
1.2 TSI 1.4 TSI	77 90	02/13→04/14 02/13→06/15		for left-hand drive vehicles		**24.4123-1719.3**	**011017**	TRW Ø 23.8 without brake fluid reservoir
1.6 TDI	85	11/16→08/18		01/17→; for left-hand drive vehicles		**24.4123-1719.3**	**011017**	TRW Ø 23.8 without brake fluid reservoir
				01/17→; for left-hand drive vehicles; +PR 1ZA / 1ZE		**24.4123-1719.3**	**011017**	TRW Ø 23.8 without brake fluid reservoir
2.0 Cupra	221	01/17→08/18		for left-hand drive vehicles; +PR 1ZA / 1ZE		**24.4123-1719.3**	**011017**	TRW Ø 23.8 without brake fluid reservoir
Brake Caliper								
1.0 TSI 1.2 TSI 1.4 TSI 1.6 TDI 1.8 TSI 2.0 Cupra 2.0 TDI	85 63 - 81 90 - 110 66 - 81 132 195 - 221 81 - 135	05/15→08/18 01/13→08/18 02/13→08/18 02/13→08/18 02/13→08/18 10/13→08/18 02/13→	⬅	+PR 1ZA; ◪		**24.3571-1801.5**	**241387**	without holder
			⬅	+PR 1ZA; ◩		**24.3571-1802.5**	**241388**	without holder
			➡	+PR 1KE; ◪		**24.6238-7023.5** **24.6238-7047.5**	**241241** **241181**	ATE without holder + eFSB ATE without holder + eFSB
			➡	+PR 1KE; ◩		**24.6238-7024.5** **24.6238-7048.5**	**241242** **241182**	ATE without holder + eFSB ATE without holder + eFSB
			➡	+PR 1KJ / 1KY; ◪		**24.6242-7017.5**	**241185**	ATE without holder + eFSB
			➡	+PR 1KJ / 1KY; ◩		**24.6242-7018.5**	**241186**	ATE without holder + eFSB
1.6 TDI	85	11/16→08/18	⬅	01/17→; +PR 1ZA; ◪		**24.3571-1801.5**	**241387**	without holder
			⬅	01/17→; +PR 1ZA; ◩		**24.3571-1802.5**	**241388**	without holder
			➡	01/17→; +PR 1KE; ◪		**24.6238-7023.5** **24.6238-7047.5**	**241241** **241181**	ATE without holder + eFSB ATE without holder + eFSB
			➡	01/17→; +PR 1KE; ◩		**24.6238-7024.5** **24.6238-7048.5**	**241242** **241182**	ATE without holder + eFSB ATE without holder + eFSB
			➡	01/17→; +PR 1KJ / 1KY; ◪		**24.6242-7017.5**	**241185**	ATE without holder + eFSB
			➡	01/17→; +PR 1KJ / 1KY; ◩		**24.6242-7018.5**	**241186**	ATE without holder + eFSB
Brake Pad Set, disc brake								
1.0 TSI 1.2 TSI 1.4 TSI	85 63 - 81 90 - 110	05/15→08/18 01/13→08/18 02/13→08/18	⬅	+PR 1LG		**13.0460-2617.2** **13.0470-2617.2**	**602617** **LD2617**	TRW + WK TRW + WK Ceramic
			⬅	+PR 1ZA / 1ZE		**13.0460-2785.2** **13.0470-2785.2**	**602785** **LD2785**	TRW 25683 20,4 + WE / + WK TRW 25683 20,4 + WE / + WK Ceramic

SEAT - LEON SC (5F5) 01/13→

Brake Pad Set, disc brake

	kW				! #			
1.6 TDI 1.8 TSI 2.0 TDI	66 - 81 132 81 - 135	02/13→08/18 02/13→08/18 02/13→	→	+PR 1KE		**13.0460-7293.2** **13.0470-7293.2**	**607293** **LD7293**	ATE 25008 16,3 - WE / - WK ATE 25008 16,3 - WE / - WK Ceramic
			→	+PR 1KJ / 1KY; + eFSB		**13.0460-7294.2** **13.0470-7294.2**	**607294** **LD7294**	ATE 25009 16,4 - WE / - WK ATE 25009 16,4 - WE / - WK Ceramic
1.6 TDI	77	02/13→08/18	←	+PR 1LJ / 1LG		**13.0460-2617.2** **13.0470-2617.2**	**602617** **LD2617**	TRW + WK TRW + WK Ceramic
			←	+PR 1ZA / 1ZE		**13.0460-2785.2** **13.0470-2785.2**	**602785** **LD2785**	TRW 25683 20,4 + WE / + WK TRW 25683 20,4 + WE / + WK Ceramic
			→	+PR 1KE		**13.0460-7293.2** **13.0470-7293.2**	**607293** **LD7293**	ATE 25008 16,3 - WE / - WK ATE 25008 16,3 - WE / - WK Ceramic
			→	+PR 1KJ / 1KY; + eFSB		**13.0460-7294.2** **13.0470-7294.2**	**607294** **LD7294**	ATE 25009 16,4 - WE / - WK ATE 25009 16,4 - WE / - WK Ceramic
1.6 TDI	85	11/16→08/18	←	+PR 1ZA / 1ZE		**13.0460-2785.2** **13.0470-2785.2**	**602785** **LD2785**	TRW 25683 20,4 + WE / + WK TRW 25683 20,4 + WE / + WK Ceramic
			→	01/17→; +PR 1KE		**13.0460-7293.2** **13.0470-7293.2**	**607293** **LD7293**	ATE 25008 16,3 - WE / - WK ATE 25008 16,3 - WE / - WK Ceramic
			→	01/17→; +PR 1KJ / 1KY; + eFSB		**13.0460-7294.2** **13.0470-7294.2**	**607294** **LD7294**	ATE 25009 16,4 - WE / - WK ATE 25009 16,4 - WE / - WK Ceramic
2.0 Cupra	195 - 221	10/13→08/18	←	+PR 1LD / 1LJ		**13.0460-2617.2** **13.0470-2617.2**	**602617** **LD2617**	TRW + WK TRW + WK Ceramic
			←	+PR 1ZA / 1ZE		**13.0460-2785.2** **13.0470-2785.2**	**602785** **LD2785**	TRW 25683 20,4 + WE / + WK TRW 25683 20,4 + WE / + WK Ceramic
			→	+PR 1KE		**13.0460-7293.2** **13.0470-7293.2**	**607293** **LD7293**	ATE 25008 16,3 - WE / - WK ATE 25008 16,3 - WE / - WK Ceramic
			→	+PR 1KJ / 1KY; + eFSB		**13.0460-7294.2** **13.0470-7294.2**	**607294** **LD7294**	ATE 25009 16,4 - WE / - WK ATE 25009 16,4 - WE / - WK Ceramic

Warning Contact, brake pad wear

1.0 TSI 1.2 TSI 1.4 TSI 1.6 TDI 1.8 TSI 2.0 Cupra 2.0 TDI	85 63 - 81 90 - 110 66 - 81 132 195 - 213 81 - 135	05/15→08/18 01/13→08/18 02/13→08/18 02/13→08/18 02/13→08/18 10/13→11/16 02/13→	←	+PR 1ZA / 1ZE	1	**24.8190-0065.2**	**620065**	
1.6 TDI	85	11/16→08/18	←	01/17→; +PR 1ZA / 1ZE	1	**24.8190-0065.2**	**620065**	
2.0 Cupra	221	01/17→08/18	←	+PR 1ZA / 1ZE / 1LD / 1LJ	1	**24.8190-0065.2**	**620065**	

Brake Disc

1.0 TSI 1.2 TSI 1.4 TSI 1.6 TDI 1.8 TSI 2.0 TDI	85 63 - 81 90 - 110 66 - 81 132 110 - 135	05/15→08/18 01/13→08/18 02/13→08/18 02/13→08/18 02/13→08/18 02/13→	←	+PR 1ZE		**24.0125-0145.1**	**425145**	Ø 288 Brake Disc Thickness [mm] 25 Minimum thickness [mm] 22 Vented + S
			←	+PR 1ZA		**24.0125-0158.1** **24.0325-0158.1**	**425158** **525158**	Ø 312 Brake Disc Thickness [mm] 25 Minimum thickness [mm] 22 Vented + S Ø 312 Brake Disc Thickness [mm] 25 Minimum thickness [mm] 22 Vented + S
			←	+PR 1LG		**24.0130-0225.1**	**430225**	Ø 340 Brake Disc Thickness [mm] 30 Minimum thickness [mm] 27 Vented + S

© 2022 Continental Aftermarket & Services GmbH

SEAT - LEON SC (5F5) 01/13→

Brake Disc

	kW				! #			
1.0 TSI 1.2 TSI 1.4 TSI 1.6 TDI 1.8 TSI 2.0 TDI	85 63 - 81 90 - 110 66 - 81 132 110 - 135	05/15→08/18 01/13→08/18 02/13→08/18 02/13→08/18 02/13→08/18 02/13→	→	+PR 1KS / 1KE		**24.0110-0356.1**	**410356**	Ø 272 Brake Disc Thickness [mm] 9.7 Minimum thickness [mm] 8 + S
			→	+PR 1KF / 1KJ / 1KW / 1KY		**24.0122-0219.1**	**422219**	Ø 310 Brake Disc Thickness [mm] 22 Minimum thickness [mm] 20 Vented
1.2 TSI	77	02/13→04/14	←	+PR 1ZE		**24.0125-0145.1**	**425145**	Ø 288 Brake Disc Thickness [mm] 25 Minimum thickness [mm] 22 Vented + S
			←	+PR 1ZA		**24.0125-0158.1** **24.0325-0158.1**	**425158** **525158**	Ø 312 Brake Disc Thickness [mm] 25 Minimum thickness [mm] 22 Vented + S Ø 312 Brake Disc Thickness [mm] 25 Minimum thickness [mm] 22 Vented + S
			←	+PR 1LJ / 1LG		**24.0130-0225.1**	**430225**	Ø 340 Brake Disc Thickness [mm] 30 Minimum thickness [mm] 27 Vented + S
			→	+PR 1KS / 1KE		**24.0110-0356.1**	**410356**	Ø 272 Brake Disc Thickness [mm] 9.7 Minimum thickness [mm] 8 + S
			→	+PR 1KF / 1KJ / 1KW / 1KY		**24.0122-0219.1**	**422219**	Ø 310 Brake Disc Thickness [mm] 22 Minimum thickness [mm] 20 Vented
1.6 TDI	85	11/16→08/18	←	01/17→; +PR 1ZE		**24.0125-0145.1**	**425145**	Ø 288 Brake Disc Thickness [mm] 25 Minimum thickness [mm] 22 Vented + S
			←	01/17→; +PR 1ZA		**24.0125-0158.1** **24.0325-0158.1**	**425158** **525158**	Ø 312 Brake Disc Thickness [mm] 25 Minimum thickness [mm] 22 Vented + S Ø 312 Brake Disc Thickness [mm] 25 Minimum thickness [mm] 22 Vented + S
			→	01/17→; +PR 1KS / 1KE		**24.0110-0356.1**	**410356**	Ø 272 Brake Disc Thickness [mm] 9.7 Minimum thickness [mm] 8 + S
			→	01/17→; +PR 1KF / 1KJ / 1KW / 1KY		**24.0122-0219.1**	**422219**	Ø 310 Brake Disc Thickness [mm] 22 Minimum thickness [mm] 20 Vented
2.0 Cupra	195 - 221	10/13→08/18	←	+PR 1ZE		**24.0125-0145.1**	**425145**	Ø 288 Brake Disc Thickness [mm] 25 Minimum thickness [mm] 22 Vented + S
			←	+PR 1ZA		**24.0125-0158.1** **24.0325-0158.1**	**425158** **525158**	Ø 312 Brake Disc Thickness [mm] 25 Minimum thickness [mm] 22 Vented + S Ø 312 Brake Disc Thickness [mm] 25 Minimum thickness [mm] 22 Vented + S
			←	+PR 1LD / 1LJ		**24.0130-0225.1**	**430225**	Ø 340 Brake Disc Thickness [mm] 30 Minimum thickness [mm] 27 Vented + S
			→	+PR 1KS / 1KE		**24.0110-0356.1**	**410356**	Ø 272 Brake Disc Thickness [mm] 9.7 Minimum thickness [mm] 8 + S
			→	+PR 1KF / 1KJ / 1KW / 1KY		**24.0122-0219.1**	**422219**	Ø 310 Brake Disc Thickness [mm] 22 Minimum thickness [mm] 20 Vented

	kW				! #			
SEAT - LEON SC (5F5) 01/13→								
Brake Disc								
2.0 TDI	81 - 105	02/13→	←	+PR 1ZE		**24.0125-0145.1**	**425145**	Ø 288 Brake Disc Thickness [mm] 25 Minimum thickness [mm] 22 Vented + S
			←	+PR 1ZA		**24.0125-0158.1**	**425158**	Ø 312 Brake Disc Thickness [mm] 25 Minimum thickness [mm] 22 Vented + S
			←	+PR 1LG		**24.0130-0225.1**	**430225**	Ø 340 Brake Disc Thickness [mm] 30 Minimum thickness [mm] 27 Vented + S
			→	+PR 1KS / 1KE		**24.0110-0356.1**	**410356**	Ø 272 Brake Disc Thickness [mm] 9.7 Minimum thickness [mm] 8 + S
			→	+PR 1KF / 1KJ / 1KW / 1KY		**24.0122-0219.1**	**422219**	Ø 310 Brake Disc Thickness [mm] 22 Minimum thickness [mm] 20 Vented
Sensor, wheel speed								
1.0 TSI 1.2 TSI 1.4 TSI 1.6 TDI 1.8 TSI 2.0 Cupra 2.0 TDI	85 63 - 81 90 - 110 66 - 81 132 195 - 221 81 - 135	05/15→08/18 01/13→08/18 02/13→08/18 02/13→08/18 02/13→08/18 10/13→08/18 02/13→	←	⊞		**24.0711-5273.3**	**360303**	
			←	⊟		**24.0711-5274.3**	**360304**	
			→	for vehicles with autom. distance control	2	**24.0711-6337.3**	**360390**	
1.6 TDI	85	11/16→08/18	←	01/17→; ⊞		**24.0711-5273.3**	**360303**	
			←	01/17→; ⊟		**24.0711-5274.3**	**360304**	
			→	01/17→; for vehicles with autom. distance control	2	**24.0711-6337.3**	**360390**	
Slave Cylinder, clutch								
1.0 TSI 1.2 TSI 1.4 TSI 1.6 TDI 1.8 TSI 2.0 Cupra 2.0 TDI	85 63 - 81 90 - 110 66 - 81 132 195 - 213 81 - 135	05/15→08/18 01/13→08/18 02/13→08/18 02/13→08/18 02/13→08/18 10/13→11/16 02/13→		+PR 0EC / 0EM; for left-hand drive vehicles		**24.2519-1706.3**	**040096**	Ø 19
1.6 TDI	85	11/16→08/18		01/17→; for left-hand drive vehicles; +PR 0EC / 0EM		**24.2519-1706.3**	**040096**	Ø 19
Control Element, parking brake caliper								
1.0 TSI 1.2 TSI 1.4 TSI 1.6 TDI 1.8 TSI 2.0 Cupra 2.0 TDI	85 63 - 81 90 - 110 66 - 81 132 195 - 221 81 - 135	05/15→08/18 01/13→08/18 02/13→08/18 02/13→08/18 02/13→08/18 10/13→08/18 02/13→	→	+PR 1KE / 1KJ / 1KY; ⊞		**11.9282-1001.3**	**250159**	ATE
			→	+PR 1KE / 1KJ / 1KY; ⊟		**11.9282-1002.3**	**250160**	ATE
1.6 TDI	85	11/16→08/18	→	01/17→; +PR 1KE / 1KJ / 1KY; ⊞		**11.9282-1001.3**	**250159**	ATE
			→	01/17→; +PR 1KE / 1KJ / 1KY; ⊟		**11.9282-1002.3**	**250160**	ATE
SEAT - LEON Sportstourer (KL8) 03/20→								
Brake Caliper								
1.0 TSI 1.0 TSI Mild Hybrid 1.4 TSI e-Hybrid	66 - 81 81 110 - 150	03/20→ 08/20→ 05/20→	←	+PR 1ZK; ⊞		**24.3571-1801.5**	**241387**	without holder
			←	+PR 1ZK; ⊟		**24.3571-1802.5**	**241388**	without holder

© 2022 Continental Aftermarket & Services GmbH

	kW				! #			
SEAT - LEON Sportstourer (KL8) 03/20→								
Brake Caliper								
1.5 eTSI 1.5 TGi 1.5 TSI 2.0 TDI 2.0 TFSI	110 96 96 - 110 85 - 110 140	03/20→ 05/21→ 03/20→ 04/20→ 03/21→	←	+PR 1ZK; ◪		**24.3571-1801.5**	**241387**	without holder
			←	+PR 1ZK; ◩		**24.3571-1802.5**	**241388**	without holder
Brake Pad Set, disc brake								
1.0 TSI 1.0 TSI Mild Hybrid 1.4 TSI e-Hybrid 1.5 eTSI 1.5 TGi 1.5 TSI 2.0 TDI 2.0 TFSI	66 - 81 81 110 - 150 110 96 96 - 110 85 - 110 140	03/20→ 08/20→ 05/20→ 03/20→ 05/21→ 03/20→ 04/20→ 03/21→	←	+PR 1ZK		**13.0460-2785.2** **13.0470-2785.2**	**602785** **LD2785**	TRW 25683 20,4 + WE / + WK TRW 25683 20,4 + WE / + WK Ceramic
Warning Contact, brake pad wear								
1.0 TSI 1.0 TSI Mild Hybrid 1.4 TSI e-Hybrid 1.5 eTSI 1.5 TGi 1.5 TSI 2.0 TDI 2.0 TFSI	66 - 81 81 110 - 150 110 96 96 - 110 85 - 110 140	03/20→ 08/20→ 05/20→ 03/20→ 05/21→ 03/20→ 04/20→ 03/21→	←	+PR 1ZK	1	**24.8190-0065.2**	**620065**	
Brake Disc								
1.0 TSI 1.0 TSI Mild Hybrid 1.4 TSI e-Hybrid 1.5 eTSI 1.5 TGi 1.5 TSI 2.0 TDI 2.0 TFSI	66 - 81 81 110 - 150 110 96 96 - 110 85 - 110 140	03/20→ 08/20→ 05/20→ 03/20→ 05/21→ 03/20→ 04/20→ 03/21→	←	+PR 1ZE		**24.0125-0145.1**	**425145**	Ø 288 Brake Disc Thickness [mm] 25 Minimum thickness [mm] 22 Vented + S
			←	+PR 1ZK		**24.0125-0158.1**	**425158**	Ø 312 Brake Disc Thickness [mm] 25 Minimum thickness [mm] 22 Vented + S
			→	+PR 1KE		**24.0110-0356.1**	**410356**	Ø 272 Brake Disc Thickness [mm] 9.7 Minimum thickness [mm] 8 + S
Sensor, wheel speed								
1.0 TSI 1.0 TSI Mild Hybrid 1.4 TSI e-Hybrid 1.5 eTSI 1.5 TGi 1.5 TSI 2.0 TDI 2.0 TFSI	66 - 81 81 110 - 150 110 96 96 - 110 85 - 110 140	03/20→ 08/20→ 05/20→ 03/20→ 05/21→ 03/20→ 04/20→ 03/21→	←	◪		**24.0711-5273.3**	**360303**	
			←	◩		**24.0711-5274.3**	**360304**	
			→		2	**24.0711-6337.3**	**360390**	
2.0 TDI	110	11/20→	←	◪		**24.0711-5273.3**	**360303**	
			←	◩		**24.0711-5274.3**	**360304**	
			→	◪		**24.0711-5401.3** **24.0711-5402.3**	**360330** **360331**	
			→	◩		**24.0711-5401.3** **24.0711-5402.3**	**360330** **360331**	
SEAT - LEON ST (5F8) 09/12→								
Brake Master Cylinder								
1.0 TSi 1.5 TGi 1.5 TSI 2.0 Cupra	63 96 96 - 110 213	09/18→ 10/18→ 09/18→ 10/15→		for left-hand drive vehicles		**24.4123-1719.3**	**011017**	TRW Ø 23.8 without brake fluid reservoir
				for left-hand drive vehicles; +PR 1ZA / 1ZE		**24.4123-1719.3**	**011017**	TRW Ø 23.8 without brake fluid reservoir

SEAT - LEON ST (5F8) 09/12→

Brake Master Cylinder

	kW				! #			
1.0 TSI 1.2 TSI 1.4 TGI 1.4 TSI 1.6 TDI 1.6 TDI 4Drive 1.8 TSI 1.8 TSI 4Drive 2.0 Cupra 2.0 TDI 2.0 TDI 4Drive	85 63 - 81 81 90 - 110 66 - 81 77 - 81 132 132 195 - 206 81 - 135 110 - 135	05/15→ 08/13→ 10/13→ 09/12→ 09/13→ 04/14→ 10/13→ 11/14→ 10/13→ 02/13→ 04/14→		for left-hand drive vehicles		**24.4123-1719.3**	**011017**	TRW Ø 23.8 without brake fluid reservoir
				11/16→; for left-hand drive vehicles; +PR 1ZA / 1ZE		**24.4123-1719.3**	**011017**	TRW Ø 23.8 without brake fluid reservoir
1.6 TDI	85	11/16→		01/17→; for left-hand drive vehicles		**24.4123-1719.3**	**011017**	TRW Ø 23.8 without brake fluid reservoir
				01/17→; for left-hand drive vehicles; +PR 1ZA / 1ZE		**24.4123-1719.3**	**011017**	TRW Ø 23.8 without brake fluid reservoir
1.6 TDI 4Drive 2.0 Cupra 2.0 Cupra 4Drive 2.0 TSI 2.0 TSI 4Drive	85 221 221 140 140	07/18→ 11/16→ 11/16→ 09/18→ 09/18→		for left-hand drive vehicles; +PR 1ZA / 1ZE		**24.4123-1719.3**	**011017**	TRW Ø 23.8 without brake fluid reservoir

Brake Caliper

1.0 TSi 1.0 TSI 1.2 TSI 1.4 TGI 1.4 TSI 1.5 TGi 1.5 TSI 1.6 TDI 1.6 TDI 4Drive 1.8 TSI 1.8 TSI 4Drive 2.0 Cupra 2.0 Cupra 4Drive 2.0 TDI 2.0 TDI 4Drive 2.0 TSI 2.0 TSI 4Drive	63 85 63 - 81 81 90 - 110 96 96 - 110 66 - 81 77 - 85 132 132 195 - 221 221 81 - 135 110 - 135 140 140	09/18→ 05/15→ 08/13→ 10/13→ 09/12→ 10/18→ 09/18→ 09/13→ 04/14→ 10/13→ 11/14→ 10/13→ 11/16→ 02/13→ 04/14→ 09/18→ 09/18→	←	+PR 1ZA; ▞		**24.3571-1801.5**	**241387**	without holder
			←	+PR 1ZA; ▚		**24.3571-1802.5**	**241388**	without holder
			→	+PR 1KE; ▞		**24.6238-7023.5** **24.6238-7047.5**	**241241** **241181**	ATE without holder + eFSB ATE without holder + eFSB
			→	+PR 1KE; ▚		**24.6238-7024.5** **24.6238-7048.5**	**241242** **241182**	ATE without holder + eFSB ATE without holder + eFSB
			→	+PR 1KJ / 1KY; ▞		**24.6242-7017.5**	**241185**	ATE without holder + eFSB
			→	+PR 1KJ / 1KY; ▚		**24.6242-7018.5**	**241186**	ATE without holder + eFSB
1.6 TDI	85	11/16→	←	01/17→; +PR 1ZA; ▞		**24.3571-1801.5**	**241387**	without holder
			←	01/17→; +PR 1ZA; ▚		**24.3571-1802.5**	**241388**	without holder
			→	01/17→; +PR 1KE; ▞		**24.6238-7023.5** **24.6238-7047.5**	**241241** **241181**	ATE without holder + eFSB ATE without holder + eFSB
			→	01/17→; +PR 1KE; ▚		**24.6238-7024.5** **24.6238-7048.5**	**241242** **241182**	ATE without holder + eFSB ATE without holder + eFSB
			→	01/17→; +PR 1KJ / 1KY; ▞		**24.6242-7017.5**	**241185**	ATE without holder + eFSB
			→	01/17→; +PR 1KJ / 1KY; ▚		**24.6242-7018.5**	**241186**	ATE without holder + eFSB

Brake Pad Set, disc brake

1.0 TSi 1.5 TGi 1.5 TSI 1.6 TDI 4Drive 2.0 Cupra 2.0 Cupra 4Drive 2.0 TSI 2.0 TSI 4Drive	63 96 96 - 110 85 221 221 140 140	09/18→ 10/18→ 09/18→ 07/18→ 11/16→ 11/16→ 09/18→ 09/18→	←	+PR 1ZA / 1ZE		**13.0460-2785.2** **13.0470-2785.2**	**602785** **LD2785**	TRW 25683 20,4 + WE / + WK TRW 25683 20,4 + WE / + WK Ceramic
			→	+PR 1KE		**13.0460-7293.2** **13.0470-7293.2**	**607293** **LD7293**	ATE 25008 16,3 - WE / - WK ATE 25008 16,3 - WE / - WK Ceramic
			→	+PR 1KJ / 1KY; + eFSB		**13.0460-7294.2** **13.0470-7294.2**	**607294** **LD7294**	ATE 25009 16,4 - WE / - WK ATE 25009 16,4 - WE / - WK Ceramic
1.0 TSI 1.2 TSI	85 63 - 81	05/15→ 08/13→	←	+PR 1LG		**13.0460-2617.2** **13.0470-2617.2**	**602617** **LD2617**	TRW + WK TRW + WK Ceramic

© 2022 Continental Aftermarket & Services GmbH

SEAT - LEON ST (5F8) 09/12→

Brake Pad Set, disc brake

	kW				! #			
1.4 TGI 1.4 TSI 1.6 TDI 1.6 TDI 4Drive 1.8 TSI 1.8 TSI 4Drive 2.0 TDI 2.0 TDI 4Drive	81 90 - 110 66 - 81 77 - 81 132 132 81 - 135 110 - 135	10/13→ 09/12→ 09/13→ 04/14→ 10/13→ 11/14→ 02/13→ 04/14→	←	+PR 1ZA / 1ZE		**13.0460-2785.2** **13.0470-2785.2**	**602785** **LD2785**	TRW 25683 20,4 + WE / + WK TRW 25683 20,4 + WE / + WK Ceramic
			→	+PR 1KE		**13.0460-7293.2** **13.0470-7293.2**	**607293** **LD7293**	ATE 25008 16,3 - WE / - WK ATE 25008 16,3 - WE / - WK Ceramic
			→	+PR 1KJ / 1KY; + eFSB		**13.0460-7294.2** **13.0470-7294.2**	**607294** **LD7294**	ATE 25009 16,4 - WE / - WK ATE 25009 16,4 - WE / - WK Ceramic
1.6 TDI	77	10/13→	←	+PR 1LJ / 1LG		**13.0460-2617.2** **13.0470-2617.2**	**602617** **LD2617**	TRW + WK TRW + WK Ceramic
			←	+PR 1ZA / 1ZE		**13.0460-2785.2** **13.0470-2785.2**	**602785** **LD2785**	TRW 25683 20,4 + WE / + WK TRW 25683 20,4 + WE / + WK Ceramic
			→	+PR 1KE		**13.0460-7293.2** **13.0470-7293.2**	**607293** **LD7293**	ATE 25008 16,3 - WE / - WK ATE 25008 16,3 - WE / - WK Ceramic
			→	+PR 1KJ / 1KY; + eFSB		**13.0460-7294.2** **13.0470-7294.2**	**607294** **LD7294**	ATE 25009 16,4 - WE / - WK ATE 25009 16,4 - WE / - WK Ceramic
1.6 TDI	85	11/16→	←	+PR 1ZA / 1ZE		**13.0460-2785.2** **13.0470-2785.2**	**602785** **LD2785**	TRW 25683 20,4 + WE / + WK TRW 25683 20,4 + WE / + WK Ceramic
			→	01/17→; +PR 1KE		**13.0460-7293.2** **13.0470-7293.2**	**607293** **LD7293**	ATE 25008 16,3 - WE / - WK ATE 25008 16,3 - WE / - WK Ceramic
			→	01/17→; +PR 1KJ / 1KY; + eFSB		**13.0460-7294.2** **13.0470-7294.2**	**607294** **LD7294**	ATE 25009 16,4 - WE / - WK ATE 25009 16,4 - WE / - WK Ceramic
2.0 Cupra	195 - 213	10/13→	←	+PR 1LD / 1LJ		**13.0460-2617.2** **13.0470-2617.2**	**602617** **LD2617**	TRW + WK TRW + WK Ceramic
			←	+PR 1ZA / 1ZE		**13.0460-2785.2** **13.0470-2785.2**	**602785** **LD2785**	TRW 25683 20,4 + WE / + WK TRW 25683 20,4 + WE / + WK Ceramic
			→	+PR 1KE		**13.0460-7293.2** **13.0470-7293.2**	**607293** **LD7293**	ATE 25008 16,3 - WE / - WK ATE 25008 16,3 - WE / - WK Ceramic
			→	+PR 1KJ / 1KY; + eFSB		**13.0460-7294.2** **13.0470-7294.2**	**607294** **LD7294**	ATE 25009 16,4 - WE / - WK ATE 25009 16,4 - WE / - WK Ceramic

Warning Contact, brake pad wear

1.0 TSi 1.0 TSI 1.2 TSI 1.4 TGI 1.4 TSI 1.5 TGi 1.5 TSI 1.6 TDI 1.6 TDI 4Drive 1.8 TSI 1.8 TSI 4Drive 2.0 Cupra 2.0 Cupra 4Drive 2.0 TDI 2.0 TDI 4Drive 2.0 TSI 2.0 TSI 4Drive	63 85 63 - 81 81 90 - 110 96 96 - 110 66 - 81 77 - 85 132 132 195 - 221 221 81 - 135 110 - 135 140 140	09/18→ 05/15→ 08/13→ 10/13→ 09/12→ 10/18→ 09/18→ 09/13→ 04/14→ 10/13→ 11/14→ 10/13→ 11/16→ 02/13→ 04/14→ 09/18→ 09/18→	←	+PR 1ZA / 1ZE	1	**24.8190-0065.2**	**620065**	
1.6 TDI	85	11/16→	←	01/17→; +PR 1ZA / 1ZE	1	**24.8190-0065.2**	**620065**	

SEAT - LEON ST (5F8) 09/12→

Brake Disc

	kW				! #			
1.0 TSi 1.5 TGi 1.5 TSI 1.6 TDI 4Drive 2.0 Cupra 2.0 TSI 2.0 TSI 4Drive	63 96 96 - 110 85 221 140 140	09/18→ 10/18→ 09/18→ 07/18→ 11/16→ 09/18→ 09/18→	←	+PR 1ZE		**24.0125-0145.1**	**425145**	Ø 288 Brake Disc Thickness [mm] 25 Minimum thickness [mm] 22 Vented + S
			←	+PR 1ZA		**24.0125-0158.1** **24.0325-0158.1**	**425158** **525158**	Ø 312 Brake Disc Thickness [mm] 25 Minimum thickness [mm] 22 Vented + S Ø 312 Brake Disc Thickness [mm] 25 Minimum thickness [mm] 22 Vented + S
			→	+PR 1KS / 1KE		**24.0110-0356.1**	**410356**	Ø 272 Brake Disc Thickness [mm] 9.7 Minimum thickness [mm] 8 + S
			→	+PR 1KF / 1KJ / 1KW / 1KY		**24.0122-0219.1**	**422219**	Ø 310 Brake Disc Thickness [mm] 22 Minimum thickness [mm] 20 Vented
1.0 TSI 1.2 TSI 1.4 TGI 1.4 TSI 1.6 TDI 1.6 TDI 4Drive 1.8 TSI 1.8 TSI 4Drive 2.0 TDI 2.0 TDI 4Drive	85 63 - 81 81 90 - 110 66 - 81 77 - 81 132 132 81 - 135 110 - 135	05/15→ 11/13→ 10/13→ 09/12→ 09/13→ 04/14→ 10/13→ 11/14→ 02/13→ 04/14→	←	+PR 1ZE		**24.0125-0145.1**	**425145**	Ø 288 Brake Disc Thickness [mm] 25 Minimum thickness [mm] 22 Vented + S
			←	+PR 1ZA		**24.0125-0158.1** **24.0325-0158.1**	**425158** **525158**	Ø 312 Brake Disc Thickness [mm] 25 Minimum thickness [mm] 22 Vented + S Ø 312 Brake Disc Thickness [mm] 25 Minimum thickness [mm] 22 Vented + S
			←	+PR 1LG		**24.0130-0225.1**	**430225**	Ø 340 Brake Disc Thickness [mm] 30 Minimum thickness [mm] 27 Vented + S
			→	+PR 1KS / 1KE		**24.0110-0356.1**	**410356**	Ø 272 Brake Disc Thickness [mm] 9.7 Minimum thickness [mm] 8 + S
			→	+PR 1KF / 1KJ / 1KW / 1KY		**24.0122-0219.1**	**422219**	Ø 310 Brake Disc Thickness [mm] 22 Minimum thickness [mm] 20 Vented
1.2 TSI	77	08/13→	←	+PR 1ZE		**24.0125-0145.1**	**425145**	Ø 288 Brake Disc Thickness [mm] 25 Minimum thickness [mm] 22 Vented + S
			←	+PR 1ZA		**24.0125-0158.1** **24.0325-0158.1**	**425158** **525158**	Ø 312 Brake Disc Thickness [mm] 25 Minimum thickness [mm] 22 Vented + S Ø 312 Brake Disc Thickness [mm] 25 Minimum thickness [mm] 22 Vented + S
			←	+PR 1LJ / 1LG		**24.0130-0225.1**	**430225**	Ø 340 Brake Disc Thickness [mm] 30 Minimum thickness [mm] 27 Vented + S
			→	+PR 1KS / 1KE		**24.0110-0356.1**	**410356**	Ø 272 Brake Disc Thickness [mm] 9.7 Minimum thickness [mm] 8 + S
			→	+PR 1KF / 1KJ / 1KW / 1KY		**24.0122-0219.1**	**422219**	Ø 310 Brake Disc Thickness [mm] 22 Minimum thickness [mm] 20 Vented
1.6 TDI	85	11/16→	←	01/17→; +PR 1ZE		**24.0125-0145.1**	**425145**	Ø 288 Brake Disc Thickness [mm] 25 Minimum thickness [mm] 22 Vented + S
			←	01/17→; +PR 1ZA		**24.0125-0158.1** **24.0325-0158.1**	**425158** **525158**	Ø 312 Brake Disc Thickness [mm] 25 Minimum thickness [mm] 22 Vented + S Ø 312 Brake Disc Thickness [mm] 25 Minimum thickness [mm] 22 Vented + S

© 2022 Continental Aftermarket & Services GmbH

SEAT - LEON ST (5F8) 09/12→

Brake Disc

	kW				! #			
1.6 TDI	85	11/16→	➡	01/17→; +PR 1KS / 1KE		**24.0110-0356.1**	**410356**	Ø 272 Brake Disc Thickness [mm] 9.7 Minimum thickness [mm] 8 + S
			➡	01/17→; +PR 1KF / 1KJ / 1KW / 1KY		**24.0122-0219.1**	**422219**	Ø 310 Brake Disc Thickness [mm] 22 Minimum thickness [mm] 20 Vented
2.0 Cupra	195 - 206	10/13→	⬅	+PR 1ZE		**24.0125-0145.1**	**425145**	Ø 288 Brake Disc Thickness [mm] 25 Minimum thickness [mm] 22 Vented + S
			⬅	+PR 1ZA		**24.0125-0158.1** **24.0325-0158.1**	**425158** **525158**	Ø 312 Brake Disc Thickness [mm] 25 Minimum thickness [mm] 22 Vented + S Ø 312 Brake Disc Thickness [mm] 25 Minimum thickness [mm] 22 Vented + S
			⬅	+PR 1LD / 1LJ		**24.0130-0225.1**	**430225**	Ø 340 Brake Disc Thickness [mm] 30 Minimum thickness [mm] 27 Vented + S
			➡	+PR 1KS / 1KE		**24.0110-0356.1**	**410356**	Ø 272 Brake Disc Thickness [mm] 9.7 Minimum thickness [mm] 8 + S
			➡	+PR 1KF / 1KJ / 1KW / 1KY		**24.0122-0219.1**	**422219**	Ø 310 Brake Disc Thickness [mm] 22 Minimum thickness [mm] 20 Vented
2.0 Cupra	213	10/15→	⬅	+PR 1ZE		**24.0125-0145.1**	**425145**	Ø 288 Brake Disc Thickness [mm] 25 Minimum thickness [mm] 22 Vented + S
			⬅	+PR 1ZA		**24.0125-0158.1** **24.0325-0158.1**	**425158** **525158**	Ø 312 Brake Disc Thickness [mm] 25 Minimum thickness [mm] 22 Vented + S Ø 312 Brake Disc Thickness [mm] 25 Minimum thickness [mm] 22 Vented + S
			⬅	+PR 1LD / 1LJ		**24.0130-0225.1**	**430225**	Ø 340 Brake Disc Thickness [mm] 30 Minimum thickness [mm] 27 Vented + S
			➡	+PR 1KF / 1KJ / 1KW / 1KY		**24.0122-0219.1**	**422219**	Ø 310 Brake Disc Thickness [mm] 22 Minimum thickness [mm] 20 Vented
2.0 Cupra 4Drive	221	11/16→	⬅	+PR 1ZA		**24.0325-0158.1**	**525158**	Ø 312 Brake Disc Thickness [mm] 25 Minimum thickness [mm] 22 Vented + S
			➡	+PR 1KF / 1KJ / 1KW / 1KY		**24.0122-0219.1**	**422219**	Ø 310 Brake Disc Thickness [mm] 22 Minimum thickness [mm] 20 Vented
2.0 TDI	105	10/13→	⬅	+PR 1ZE		**24.0125-0145.1**	**425145**	Ø 288 Brake Disc Thickness [mm] 25 Minimum thickness [mm] 22 Vented + S
			⬅	+PR 1ZA		**24.0125-0158.1**	**425158**	Ø 312 Brake Disc Thickness [mm] 25 Minimum thickness [mm] 22 Vented + S
			⬅	+PR 1LG		**24.0130-0225.1**	**430225**	Ø 340 Brake Disc Thickness [mm] 30 Minimum thickness [mm] 27 Vented + S
			➡	+PR 1KS / 1KE		**24.0110-0356.1**	**410356**	Ø 272 Brake Disc Thickness [mm] 9.7 Minimum thickness [mm] 8 + S
			➡	+PR 1KF / 1KJ / 1KW / 1KY		**24.0122-0219.1**	**422219**	Ø 310 Brake Disc Thickness [mm] 22 Minimum thickness [mm] 20 Vented

© 2022 Continental Aftermarket & Services GmbH

SEAT - LEON ST (5F8) 09/12→

Sensor, wheel speed

	kW				! #			
1.0 TSi 1.0 TSI 1.2 TSI 1.4 TGI 1.4 TSI 1.5 TGi 1.5 TSI 1.6 TDI 1.8 TSI 2.0 Cupra 2.0 TDI 2.0 TSI	63 85 63 - 81 81 90 - 110 96 96 - 110 66 - 81 132 195 - 221 81 - 135 140	09/18→ 05/15→ 08/13→ 10/13→ 10/18→ 09/18→ 09/13→ 10/13→ 10/13→ 02/13→ 09/18→	←			24.0711-5273.3	360303	
			←			24.0711-5274.3	360304	
			→	for vehicles with autom. distance control	2	24.0711-6337.3	360390	
1.6 TDI	85	11/16→	←	01/17→;		24.0711-5273.3	360303	
			←	01/17→;		24.0711-5274.3	360304	
			→	01/17→; for vehicles with autom. distance control	2	24.0711-6337.3	360390	
1.6 TDI 4Drive 1.8 TSI 4Drive 2.0 Cupra 4Drive 2.0 TDI 4Drive 2.0 TSI 4Drive	77 - 85 132 221 110 - 135 140	04/14→ 11/14→ 11/16→ 04/14→ 09/18→	←			24.0711-5273.3	360303	
			←			24.0711-5274.3	360304	
			→	for vehicles with autom. distance control;		24.0711-5401.3	360330	
			→	for vehicles with autom. distance control;		24.0711-5402.3	360331	

Slave Cylinder, clutch

1.0 TSi 1.0 TSI 1.2 TSI 1.4 TGI 1.4 TSI 1.5 TGi 1.5 TSI 1.6 TDI 1.6 TDI 4Drive 1.8 TSI 1.8 TSI 4Drive 2.0 Cupra 2.0 TDI 2.0 TDI 4Drive 2.0 TSI 2.0 TSI 4Drive	63 85 63 - 81 81 90 - 110 96 96 - 110 66 - 81 77 - 85 132 132 195 - 213 81 - 135 110 - 135 140 140	09/18→ 05/15→ 08/13→ 10/13→ 09/12→ 10/18→ 09/18→ 09/13→ 04/14→ 10/13→ 11/14→ 10/13→ 02/13→ 04/14→ 09/18→ 09/18→		for left-hand drive vehicles; +PR 0EC / 0EM		24.2519-1706.3	040096	Ø 19
1.6 TDI	85	11/16→		01/17→; for left-hand drive vehicles; +PR 0EC / 0EM		24.2519-1706.3	040096	Ø 19

Control Element, parking brake caliper

1.0 TSi 1.0 TSI 1.2 TSI 1.4 TGI 1.4 TSI 1.5 TGi 1.5 TSI 1.6 TDI 1.6 TDI 4Drive 1.8 TSI 1.8 TSI 4Drive 2.0 Cupra 2.0 Cupra 4Drive 2.0 TDI 	63 85 63 - 81 81 90 - 110 96 96 - 110 66 - 81 77 - 85 132 132 195 - 221 221 81 - 135	09/18→ 05/15→ 08/13→ 10/13→ 09/12→ 10/18→ 09/18→ 09/13→ 04/14→ 10/13→ 11/14→ 10/13→ 11/16→ 02/13→	→	+PR 1KE / 1KJ / 1KY;		11.9282-1001.3	250159	ATE
			→	+PR 1KE / 1KJ / 1KY;		11.9282-1002.3	250160	ATE

© 2022 Continental Aftermarket & Services GmbH

	kW				! #			
SEAT - LEON ST (5F8) 09/12→								
Control Element, parking brake caliper								
2.0 TDI 4Drive	110 - 135	04/14→		+PR 1KE / 1KJ / 1KY;		**11.9282-1001.3**	**250159**	ATE
2.0 TSI	140	09/18→		+PR 1KE / 1KJ / 1KY;		**11.9282-1002.3**	**250160**	ATE
2.0 TSI 4Drive	140	09/18→						
1.6 TDI	85	11/16→		01/17→; +PR 1KE / 1KJ / 1KY;		**11.9282-1001.3**	**250159**	ATE
				01/17→; +PR 1KE / 1KJ / 1KY;		**11.9282-1002.3**	**250160**	ATE
SEAT - LEON ST Estate Van (5F8) 01/13→								
Brake Master Cylinder								
1.0 TSI	85	05/15→		for left-hand drive vehicles		**24.4123-1719.3**	**011017**	TRW Ø 23.8 without brake fluid reservoir
1.2 TSI	63 - 81	01/13→						
1.4 TSI	110	05/14→		11/16→; for left-hand drive vehicles; +PR 1ZA / 1ZE		**24.4123-1719.3**	**011017**	TRW Ø 23.8 without brake fluid reservoir
1.6 TDI	81	09/13→						
1.8 TFSI	132	10/13→						
2.0 Cupra	206	10/13→						
2.0 TDI	110 - 135	04/13→						
2.0 TDI 4Drive	110 - 135	09/14→						
1.6 TDI	85	11/16→		01/17→; for left-hand drive vehicles		**24.4123-1719.3**	**011017**	TRW Ø 23.8 without brake fluid reservoir
				01/17→; for left-hand drive vehicles; +PR 1ZA / 1ZE		**24.4123-1719.3**	**011017**	TRW Ø 23.8 without brake fluid reservoir
2.0 Cupra	221	11/16→		for left-hand drive vehicles; +PR 1ZA / 1ZE		**24.4123-1719.3**	**011017**	TRW Ø 23.8 without brake fluid reservoir
2.0 Cupra 4Drive	221	11/16→						
Brake Caliper								
1.0 TSI	85	05/15→		+PR 1ZA;		**24.3571-1801.5**	**241387**	without holder
1.2 TSI	63 - 81	01/13→		+PR 1ZA;		**24.3571-1802.5**	**241388**	without holder
1.4 TSI	110	05/14→		+PR 1KE;		**24.6238-7023.5**	**241241**	ATE without holder + eFSB
1.6 TDI	81	09/13→				**24.6238-7047.5**	**241181**	ATE without holder + eFSB
1.8 TFSI	132	10/13→						
2.0 Cupra	206 - 221	10/13→		+PR 1KE;		**24.6238-7024.5**	**241242**	ATE without holder + eFSB
						24.6238-7048.5	**241182**	ATE without holder + eFSB
2.0 Cupra 4Drive	221	11/16→						
2.0 TDI	110 - 135	04/13→		+PR 1KJ / 1KY;		**24.6242-7017.5**	**241185**	ATE without holder + eFSB
2.0 TDI 4Drive	110	09/14→		+PR 1KJ / 1KY;		**24.6242-7018.5**	**241186**	ATE without holder + eFSB
1.6 TDI	85	11/16→		01/17→; +PR 1ZA;		**24.3571-1801.5**	**241387**	without holder
				01/17→; +PR 1ZA;		**24.3571-1802.5**	**241388**	without holder
				01/17→; +PR 1KE;		**24.6238-7023.5**	**241241**	ATE without holder + eFSB
						24.6238-7047.5	**241181**	ATE without holder + eFSB
				01/17→; +PR 1KE;		**24.6238-7024.5**	**241242**	ATE without holder + eFSB
						24.6238-7048.5	**241182**	ATE without holder + eFSB
				01/17→; +PR 1KJ / 1KY;		**24.6242-7017.5**	**241185**	ATE without holder + eFSB
				01/17→; +PR 1KJ / 1KY;		**24.6242-7018.5**	**241186**	ATE without holder + eFSB
2.0 TDI 4Drive	135	10/14→		11/14→; +PR 1ZA;		**24.3571-1801.5**	**241387**	without holder
				11/14→; +PR 1ZA;		**24.3571-1802.5**	**241388**	without holder
				11/14→; +PR 1KE;		**24.6238-7023.5**	**241241**	ATE without holder + eFSB
						24.6238-7047.5	**241181**	ATE without holder + eFSB
				11/14→; +PR 1KE;		**24.6238-7024.5**	**241242**	ATE without holder + eFSB
						24.6238-7048.5	**241182**	ATE without holder + eFSB
				11/14→; +PR 1KJ / 1KY;		**24.6242-7017.5**	**241185**	ATE without holder + eFSB
				11/14→; +PR 1KJ / 1KY;		**24.6242-7018.5**	**241186**	ATE without holder + eFSB
Brake Pad Set, disc brake								
1.0 TSI	85	05/15→		+PR 1LG		**13.0460-2617.2**	**602617**	TRW + WK
1.2 TSI	63 - 81	01/13→				**13.0470-2617.2**	**LD2617**	TRW + WK Ceramic
1.4 TSI	110	05/14→		+PR 1ZA / 1ZE		**13.0460-2785.2**	**602785**	TRW 25683 20,4 + WE / + WK
1.6 TDI	81	09/13→				**13.0470-2785.2**	**LD2785**	TRW 25683 20,4 + WE / + WK Ceramic
1.8 TFSI	132	10/13→						
2.0 TDI	110 - 135	04/13→		+PR 1KE		**13.0460-7293.2**	**607293**	ATE 25008 16,3 - WE / - WK
2.0 TDI 4Drive	110	09/14→				**13.0470-7293.2**	**LD7293**	ATE 25008 16,3 - WE / - WK Ceramic
				+PR 1KJ / 1KY; + eFSB		**13.0460-7294.2**	**607294**	ATE 25009 16,4 - WE / - WK
						13.0470-7294.2	**LD7294**	ATE 25009 16,4 - WE / - WK Ceramic

SEAT - LEON ST Estate Van (5F8) 01/13→

	kW				! #			
Brake Pad Set, disc brake								
1.6 TDI	85	11/16→	←	+PR 1ZA / 1ZE		**13.0460-2785.2**	**602785**	TRW 25683 20,4 + WE / + WK
						13.0470-2785.2	**LD2785**	TRW 25683 20,4 + WE / + WK Ceramic
			→	01/17→; +PR 1KE		**13.0460-7293.2**	**607293**	ATE 25008 16,3 - WE / - WK
						13.0470-7293.2	**LD7293**	ATE 25008 16,3 - WE / - WK Ceramic
			→	01/17→; +PR 1KJ / 1KY; + eFSB		**13.0460-7294.2**	**607294**	ATE 25009 16,4 - WE / - WK
						13.0470-7294.2	**LD7294**	ATE 25009 16,4 - WE / - WK Ceramic
2.0 Cupra	206	10/13→	←	+PR 1LD / 1LJ		**13.0460-2617.2**	**602617**	TRW + WK
						13.0470-2617.2	**LD2617**	TRW + WK Ceramic
			←	+PR 1ZA / 1ZE		**13.0460-2785.2**	**602785**	TRW 25683 20,4 + WE / + WK
						13.0470-2785.2	**LD2785**	TRW 25683 20,4 + WE / + WK Ceramic
			→	+PR 1KE		**13.0460-7293.2**	**607293**	ATE 25008 16,3 - WE / - WK
						13.0470-7293.2	**LD7293**	ATE 25008 16,3 - WE / - WK Ceramic
			→	+PR 1KJ / 1KY; + eFSB		**13.0460-7294.2**	**607294**	ATE 25009 16,4 - WE / - WK
						13.0470-7294.2	**LD7294**	ATE 25009 16,4 - WE / - WK Ceramic
2.0 Cupra 2.0 Cupra 4Drive	221 221	11/16→ 11/16→	←	+PR 1ZA / 1ZE		**13.0460-2785.2**	**602785**	TRW 25683 20,4 + WE / + WK
						13.0470-2785.2	**LD2785**	TRW 25683 20,4 + WE / + WK Ceramic
			→	+PR 1KE		**13.0460-7293.2**	**607293**	ATE 25008 16,3 - WE / - WK
						13.0470-7293.2	**LD7293**	ATE 25008 16,3 - WE / - WK Ceramic
			→	+PR 1KJ / 1KY; + eFSB		**13.0460-7294.2**	**607294**	ATE 25009 16,4 - WE / - WK
						13.0470-7294.2	**LD7294**	ATE 25009 16,4 - WE / - WK Ceramic
2.0 TDI 4Drive	135	10/14→	←	11/14→; +PR 1LG		**13.0460-2617.2**	**602617**	TRW + WK
						13.0470-2617.2	**LD2617**	TRW + WK Ceramic
			←	11/14→; +PR 1ZA / 1ZE		**13.0460-2785.2**	**602785**	TRW 25683 20,4 + WE / + WK
						13.0470-2785.2	**LD2785**	TRW 25683 20,4 + WE / + WK Ceramic
			→	+PR 1KE		**13.0460-7293.2**	**607293**	ATE 25008 16,3 - WE / - WK
						13.0470-7293.2	**LD7293**	ATE 25008 16,3 - WE / - WK Ceramic
			→	+PR 1KJ / 1KY; + eFSB		**13.0460-7294.2**	**607294**	ATE 25009 16,4 - WE / - WK
						13.0470-7294.2	**LD7294**	ATE 25009 16,4 - WE / - WK Ceramic
Warning Contact, brake pad wear								
1.0 TSI 1.2 TSI 1.4 TSI 1.6 TDI 1.8 TFSI 2.0 Cupra 2.0 Cupra 4Drive 2.0 TDI 2.0 TDI 4Drive	85 63 - 81 110 81 132 206 - 221 221 110 - 135 110 - 135	05/15→ 01/13→ 05/14→ 09/13→ 10/13→ 10/13→ 11/16→ 04/13→ 09/14→	←	+PR 1ZA / 1ZE	1	**24.8190-0065.2**	**620065**	
1.6 TDI	85	11/16→	←	01/17→; +PR 1ZA / 1ZE	1	**24.8190-0065.2**	**620065**	
Brake Disc								
1.0 TSI 1.2 TSI 1.4 TSI 1.6 TDI 1.8 TFSI 2.0 TDI 2.0 TDI 4Drive	85 81 110 81 132 110 - 135 110 - 135	05/15→ 05/14→ 05/14→ 09/13→ 10/13→ 04/13→ 09/14→	←	+PR 1ZE		**24.0125-0145.1**	**425145**	Ø 288 Brake Disc Thickness [mm] 25 Minimum thickness [mm] 22 Vented + S
			←	+PR 1ZA		**24.0125-0158.1**	**425158**	Ø 312 Brake Disc Thickness [mm] 25 Minimum thickness [mm] 22 Vented + S
			←	+PR 1LG		**24.0130-0225.1**	**430225**	Ø 340 Brake Disc Thickness [mm] 30 Minimum thickness [mm] 27 Vented + S

© 2022 Continental Aftermarket & Services GmbH

SEAT - LEON ST Estate Van (5F8) 01/13→

Brake Disc

	kW				! #			
1.0 TSI 1.2 TSI 1.4 TSI 1.6 TDI 1.8 TFSI 2.0 TDI 2.0 TDI 4Drive	85 81 110 81 132 110 - 135 110 - 135	05/15→ 05/14→ 05/14→ 09/13→ 10/13→ 04/13→ 09/14→	→	+PR 1KS / 1KE		**24.0110-0356.1**	**410356**	Ø 272 Brake Disc Thickness [mm] 9.7 Minimum thickness [mm] 8 + S
			→	+PR 1KF / 1KJ / 1KW / 1KY		**24.0122-0219.1**	**422219**	Ø 310 Brake Disc Thickness [mm] 22 Minimum thickness [mm] 20 Vented
1.2 TSI	63	01/13→	←	+PR 1ZE		**24.0125-0145.1**	**425145**	Ø 288 Brake Disc Thickness [mm] 25 Minimum thickness [mm] 22 Vented + S
			←	+PR 1ZA		**24.0125-0158.1**	**425158**	Ø 312 Brake Disc Thickness [mm] 25 Minimum thickness [mm] 22 Vented + S
			←	+PR 1LJ / 1LG		**24.0130-0225.1**	**430225**	Ø 340 Brake Disc Thickness [mm] 30 Minimum thickness [mm] 27 Vented + S
			→	+PR 1KS / 1KE		**24.0110-0356.1**	**410356**	Ø 272 Brake Disc Thickness [mm] 9.7 Minimum thickness [mm] 8 + S
			→	+PR 1KF / 1KJ / 1KW / 1KY		**24.0122-0219.1**	**422219**	Ø 310 Brake Disc Thickness [mm] 22 Minimum thickness [mm] 20 Vented
1.6 TDI	85	11/16→	←	01/17→; +PR 1ZE		**24.0125-0145.1**	**425145**	Ø 288 Brake Disc Thickness [mm] 25 Minimum thickness [mm] 22 Vented + S
			←	01/17→; +PR 1ZA		**24.0125-0158.1**	**425158**	Ø 312 Brake Disc Thickness [mm] 25 Minimum thickness [mm] 22 Vented + S
			→	01/17→; +PR 1KS / 1KE		**24.0110-0356.1**	**410356**	Ø 272 Brake Disc Thickness [mm] 9.7 Minimum thickness [mm] 8 + S
			→	01/17→; +PR 1KF / 1KJ / 1KW / 1KY		**24.0122-0219.1**	**422219**	Ø 310 Brake Disc Thickness [mm] 22 Minimum thickness [mm] 20 Vented
2.0 Cupra	206	10/13→	←	+PR 1ZE		**24.0125-0145.1**	**425145**	Ø 288 Brake Disc Thickness [mm] 25 Minimum thickness [mm] 22 Vented + S
			←	+PR 1ZA		**24.0125-0158.1**	**425158**	Ø 312 Brake Disc Thickness [mm] 25 Minimum thickness [mm] 22 Vented + S
			←	+PR 1LD / 1LJ		**24.0130-0225.1**	**430225**	Ø 340 Brake Disc Thickness [mm] 30 Minimum thickness [mm] 27 Vented + S
			→	+PR 1KS / 1KE		**24.0110-0356.1**	**410356**	Ø 272 Brake Disc Thickness [mm] 9.7 Minimum thickness [mm] 8 + S
			→	+PR 1KF / 1KJ / 1KW / 1KY		**24.0122-0219.1**	**422219**	Ø 310 Brake Disc Thickness [mm] 22 Minimum thickness [mm] 20 Vented
2.0 Cupra 2.0 Cupra 4Drive	221 221	11/16→ 11/16→	←	+PR 1ZE		**24.0125-0145.1**	**425145**	Ø 288 Brake Disc Thickness [mm] 25 Minimum thickness [mm] 22 Vented + S
			←	+PR 1ZA		**24.0125-0158.1**	**425158**	Ø 312 Brake Disc Thickness [mm] 25 Minimum thickness [mm] 22 Vented + S
			→	+PR 1KS / 1KE		**24.0110-0356.1**	**410356**	Ø 272 Brake Disc Thickness [mm] 9.7 Minimum thickness [mm] 8 + S
			→	+PR 1KF / 1KJ / 1KW / 1KY		**24.0122-0219.1**	**422219**	Ø 310 Brake Disc Thickness [mm] 22 Minimum thickness [mm] 20 Vented

© 2022 Continental Aftermarket & Services GmbH

	kW				! #			
SEAT - LEON ST Estate Van (5F8) 01/13→								
Sensor, wheel speed								
1.0 TSI 1.2 TSI 1.4 TSI 1.6 TDI 1.8 TFSI 2.0 Cupra 2.0 TDI	85 63 - 81 110 81 132 206 - 221 110 - 135	05/15→ 01/13→ 05/14→ 09/13→ 10/13→ 10/13→ 04/13→	←			**24.0711-5273.3**	**360303**	
			←			**24.0711-5274.3**	**360304**	
			→	for vehicles with autom. distance control	2	**24.0711-6337.3**	**360390**	
1.6 TDI	85	11/16→	←	01/17→;		**24.0711-5273.3**	**360303**	
			←	01/17→;		**24.0711-5274.3**	**360304**	
			→	01/17→; for vehicles with autom. distance control	2	**24.0711-6337.3**	**360390**	
2.0 Cupra 4Drive 2.0 TDI 4Drive	221 110 - 135	11/16→ 09/14→	←			**24.0711-5273.3**	**360303**	
			←			**24.0711-5274.3**	**360304**	
			→	for vehicles with autom. distance control;		**24.0711-5401.3**	**360330**	
			→	for vehicles with autom. distance control;		**24.0711-5402.3**	**360331**	
Slave Cylinder, clutch								
1.0 TSI 1.2 TSI 1.4 TSI 1.6 TDI 1.8 TFSI 2.0 Cupra 2.0 TDI 2.0 TDI 4Drive	85 63 - 81 110 81 132 206 110 - 135 110 - 135	05/15→ 01/13→ 05/14→ 09/13→ 10/13→ 10/13→ 04/13→ 09/14→		for left-hand drive vehicles; +PR 0EC / 0EM		**24.2519-1706.3**	**040096**	Ø 19
1.6 TDI	85	11/16→		01/17→; for left-hand drive vehicles; +PR 0EC / 0EM		**24.2519-1706.3**	**040096**	Ø 19
Control Element, parking brake caliper								
1.0 TSI 1.2 TSI 1.4 TSI 1.6 TDI 1.8 TFSI 2.0 Cupra 2.0 Cupra 4Drive 2.0 TDI 2.0 TDI 4Drive	85 63 - 81 110 81 132 206 - 221 221 110 - 135 110 - 135	05/15→ 01/13→ 05/14→ 09/13→ 10/13→ 10/13→ 11/16→ 04/13→ 09/14→	→	+PR 1KE / 1KJ / 1KY;		**11.9282-1001.3**	**250159**	ATE
			→	+PR 1KE / 1KJ / 1KY;		**11.9282-1002.3**	**250160**	ATE
1.6 TDI	85	11/16→	→	01/17→; +PR 1KE / 1KJ / 1KY;		**11.9282-1001.3**	**250159**	ATE
			→	01/17→; +PR 1KE / 1KJ / 1KY;		**11.9282-1002.3**	**250160**	ATE
SEAT - Mii (KF1, KE1) 10/11→								
Guide Bolt, brake caliper								
electric	61	01/20→	←		2	**11.8171-0008.1**	**990049**	ATE
Sensor, wheel speed								
1.0	44 - 55	10/11→07/19	←	05/12→;		**24.0711-5273.3**	**360303**	
			←	05/12→;		**24.0711-5274.3**	**360304**	
1.0 EcoFuel electric	50 61	10/12→07/19 01/20→	←			**24.0711-5273.3**	**360303**	
			←			**24.0711-5274.3**	**360304**	
SEAT - TARRACO (KN2) 09/18→								
Brake Caliper								
1.4 e-HYBRID 1.4 TSI Plug in Hybrid 1.5 TSI ACT 2.0 TDI 2.0 TDI 4Drive 2.0 TFSI 4Drive 2.0 TSI 4Drive	180 110 110 110 110 - 147 180 140	02/21→ 02/21→ 09/18→ 09/18→ 09/18→ 01/21→ 11/18→	←	+PR 1Zk;		**24.3571-1801.5**	**241387**	without holder
			←	+PR 1ZK;		**24.3571-1802.5**	**241388**	without holder
			←	+PR 1LA / 1LW;		**24.3601-1727.5**	**240786**	TRW without holder
			←	+PR 1LA / 1LW;		**24.3601-1728.5**	**240787**	TRW without holder
			→	+PR 1KU;		**24.6242-7005.5**	**241337**	ATE + EMot / without holder + eFSB

© 2022 Continental Aftermarket & Services GmbH

SEAT - TARRACO (KN2) 09/18→

	kW				! #			
Brake Caliper								
1.4 e-HYBRID 1.4 TSI Plug in Hybrid 1.5 TSI ACT 2.0 TDI 2.0 TDI 4Drive 2.0 TFSI 4Drive 2.0 TSI 4Drive	180 110 110 110 110 - 147 180 140	02/21→ 02/21→ 09/18→ 09/18→ 09/18→ 01/21→ 11/18→	→	+PR 1KU;		**24.6242-7006.5**	**241338**	ATE + EMot / without holder + eFSB
Brake Pad Set, disc brake								
1.4 e-HYBRID 1.4 TSI Plug in Hybrid 1.5 TSI ACT 2.0 TDI 2.0 TDI 4Drive 2.0 TFSI 4Drive 2.0 TSI 4Drive	180 110 110 110 110 - 147 180 140	02/21→ 02/21→ 09/18→ 09/18→ 09/18→ 01/21→ 11/18→	←	+PR 1LA / 1LW		**13.0460-2617.2** **13.0470-2617.2**	**602617** **LD2617**	TRW + WK TRW + WK Ceramic
			←	+PR 1ZK		**13.0460-2785.2** **13.0470-2785.2**	**602785** **LD2785**	TRW 25683 20,4 + WE / + WK TRW 25683 20,4 + WE / + WK Ceramic
			→	+PR 1KU / 2EM		**13.0460-7294.2** **13.0470-7294.2**	**607294** **LD7294**	ATE 25009 16,4 - WE / - WK ATE 25009 16,4 - WE / - WK Ceramic
Warning Contact, brake pad wear								
1.4 e-HYBRID 1.4 TSI Plug in Hybrid 1.5 TSI ACT 2.0 TDI 2.0 TDI 4Drive 2.0 TFSI 4Drive 2.0 TSI 4Drive	180 110 110 110 110 - 147 180 140	02/21→ 02/21→ 09/18→ 09/18→ 09/18→ 01/21→ 11/18→	←	+PR 1ZK	1	**24.8190-0065.2**	**620065**	
Brake Disc								
1.4 e-HYBRID 1.4 TSI Plug in Hybrid 1.5 TSI ACT 2.0 TDI 2.0 TDI 4Drive 2.0 TFSI 4Drive 2.0 TSI 4Drive	180 110 110 110 110 - 147 180 140	02/21→ 02/21→ 09/18→ 09/18→ 09/18→ 01/21→ 11/18→	←	+PR 1ZK		**24.0125-0158.1**	**425158**	Ø 312 Brake Disc Thickness [mm] 25 Minimum thickness [mm] 22 Vented + S
			←	+PR 1LW		**24.0130-0220.1**	**430220**	Ø 314 Brake Disc Thickness [mm] 30 Minimum thickness [mm] 27 Vented + S
			←	+PR 1LA		**24.0130-0225.1**	**430225**	Ø 340 Brake Disc Thickness [mm] 30 Minimum thickness [mm] 27 Vented + S
			→	+PR 1KU / 2EM		**24.0112-0210.1**	**412210**	Ø 300 Brake Disc Thickness [mm] 12 Minimum thickness [mm] 10 + S
Sensor, wheel speed								
1.4 e-HYBRID 1.4 TSI Plug in Hybrid	180 110	02/21→ 02/21→	←			**24.0711-5273.3**	**360303**	
			←			**24.0711-5274.3**	**360304**	
			→	+PR 3KP;		**24.0711-5401.3**	**360330**	
			→	+PR 3KP;		**24.0711-5402.3**	**360331**	
1.5 TSI ACT 2.0 TDI	110 110	09/18→ 09/18→	←			**24.0711-5273.3**	**360303**	
			←			**24.0711-5274.3**	**360304**	
			→	+PR 3KP;		**24.0711-5401.3**	**360330**	
			→	+PR 3KP;		**24.0711-5402.3**	**360331**	
			→	+PR 5KC	2	**24.0711-6337.3**	**360390**	
2.0 TDI 4Drive 2.0 TSI 4Drive	110 - 140 140	09/18→ 11/18→	←			**24.0711-5273.3**	**360303**	
			←			**24.0711-5274.3**	**360304**	
			→			**24.0711-5401.3**	**360330**	
			→	12/19→;		**24.0711-5401.3**	**360330**	
			→			**24.0711-5402.3**	**360331**	
			→	12/19→;		**24.0711-5402.3**	**360331**	
2.0 TDI 4Drive	147	07/20→	←			**24.0711-5273.3**	**360303**	
			←			**24.0711-5274.3**	**360304**	
			→			**24.0711-5401.3**	**360330**	
			→			**24.0711-5402.3**	**360331**	
2.0 TFSI 4Drive	180	01/21→	→			**24.0711-5401.3**	**360330**	

	kW				! #			
SEAT - TARRACO (KN2) 09/18→								
Sensor, wheel speed								
2.0 TFSI 4Drive	180	01/21→	➡			**24.0711-5402.3**	**360331**	
Control Element, parking brake caliper								
1.4 e-HYBRID 1.4 TSI Plug in Hybrid 1.5 TSI ACT 2.0 TDI 2.0 TDI 4Drive 2.0 TFSI 4Drive 2.0 TSI 4Drive	180 110 110 110 110 - 147 180 140	02/21→ 02/21→ 09/18→ 09/18→ 09/18→ 01/21→ 11/18→	➡			**11.9282-1001.3**	**250159**	ATE
			➡			**11.9282-1002.3**	**250160**	ATE
SEAT - TOLEDO II (1M2) 10/98→05/06								
Guide Bolt, brake caliper								
1.4 16V 1.6 1.8 20V 1.9 TDI 1.9 TDI 4Drive 2.3 V5 2.3 V5 20V	55 74 92 74 - 110 110 110 125	01/00→05/02 10/98→07/04 10/98→07/04 10/00→05/06 10/00→10/05 10/98→11/00 09/00→11/03		+PR 1LJ / 1ZQ	2	**11.8171-0008.1**	**990049**	ATE
			⬅	+PR 1LN / 1LE / 1ZE / 1ZH	2	**11.8171-0008.1**	**990049**	ATE
1.6 16V 1.9 TDI	77 96	06/00→05/06 05/03→05/06		→ 09/04; +PR 1LJ / 1ZQ	2	**11.8171-0008.1**	**990049**	ATE
			⬅	→ 09/04; +PR 1LN / 1LE / 1ZE / 1ZH	2	**11.8171-0008.1**	**990049**	ATE
1.8 20VT	132	09/00→07/04		05/01→; +PR 1LJ / 1ZQ	2	**11.8171-0008.1**	**990049**	ATE
			⬅	05/01→; +PR 1LN / 1LE / 1ZE / 1ZH	2	**11.8171-0008.1**	**990049**	ATE
1.9 TDI	66	03/99→07/04		04/99→; +PR 1ZQ	2	**11.8171-0008.1**	**990049**	ATE
			⬅	04/99→; +PR 1LN / 1LE / 1ZE / 1ZH	2	**11.8171-0008.1**	**990049**	ATE
1.9 TDI	81	10/98→07/04		+PR 1ZQ	2	**11.8171-0008.1**	**990049**	ATE
			⬅	+PR 1LN / 1LE / 1ZE / 1ZH	2	**11.8171-0008.1**	**990049**	ATE
Brake Disc								
1.4 16V 1.6 1.8 20V 1.9 TDI 1.9 TDI 4Drive 2.3 V5 2.3 V5 20V	55 74 92 66 - 110 110 110 125	01/00→05/02 10/98→07/04 10/98→07/04 10/98→05/06 10/00→10/05 10/98→11/00 09/00→11/03	➡	+PR 1KK / 1KP / 1KQ		**24.0109-0123.1**	**409123**	Ø 230 Brake Disc Thickness [mm] 9 Minimum thickness [mm] 7 + S
1.6 16V 1.9 TDI	77 96	06/00→05/06 05/03→05/06	➡	→ 09/04; +PR 1KK / 1KP / 1KQ		**24.0109-0123.1**	**409123**	Ø 230 Brake Disc Thickness [mm] 9 Minimum thickness [mm] 7 + S
1.8 20VT	132	09/00→07/04	➡	05/01→; +PR 1KK / 1KP / 1KQ		**24.0109-0123.1**	**409123**	Ø 230 Brake Disc Thickness [mm] 9 Minimum thickness [mm] 7 + S
SEAT - TOLEDO III (5P2) 04/04→05/09								
Guide Bolt, brake caliper								
1.4 16V 1.4 TSI 1.6 1.8 TFSI 1.9 TDI 2.0 FSI 2.0 TDI 2.0 TFSI	63 92 75 118 77 110 103 - 125 147	05/06→05/09 11/07→05/09 10/04→05/09 01/07→05/09 10/04→05/09 10/04→05/09 11/05→05/09 11/05→05/09		→ 03/09; +PR 1ZE	2	**11.8171-0008.1**	**990049**	ATE
2.0 TDI 2.0 TDI 16V	100 103	09/04→05/09 04/04→05/09		10/04→ 03/09; +PR 1ZE	2	**11.8171-0008.1**	**990049**	ATE
Brake Disc								
1.4 16V 1.4 TSI 1.6 1.8 TFSI 1.9 TDI 2.0 FSI 2.0 TDI 2.0 TFSI	63 92 75 118 77 110 103 - 125 147	05/06→05/09 11/07→05/09 10/04→05/09 01/07→05/09 10/04→05/09 10/04→05/09 11/05→05/09 11/05→05/09	⬅	→ 03/09; +PR 1ZE		**24.0125-0145.1**	**425145**	Ø 288 Brake Disc Thickness [mm] 25 Minimum thickness [mm] 22 Vented + S
2.0 TDI 2.0 TDI 16V	100 103	09/04→05/09 04/04→05/09	⬅	10/04→ 03/09; +PR 1ZE		**24.0125-0145.1**	**425145**	Ø 288 Brake Disc Thickness [mm] 25 Minimum thickness [mm] 22 Vented + S

© 2022 Continental Aftermarket & Services GmbH

	kW				! #			
SEAT - TOLEDO III (5P2) 04/04→05/09								
Slave Cylinder, clutch								
1.4 16V 1.4 TSI 1.6 1.8 TFSI 1.9 TDI 2.0 FSI 2.0 TDI 2.0 TFSI	63 92 75 118 77 110 103 - 125 147	05/06→05/09 11/07→05/09 10/04→05/09 01/07→05/09 10/04→05/09 10/04→05/09 11/05→05/09 11/05→05/09		→ 03/09		**24.2519-1706.3**	**040096**	Ø 19
2.0 TDI 2.0 TDI 16V	100 103	09/04→05/09 04/04→05/09		10/04→ 03/09		**24.2519-1706.3**	**040096**	Ø 19
SEAT - TOLEDO IV (KG3) 07/12→04/19								
Guide Bolt, brake caliper								
1.0 TSI 1.2 TSI 1.4 TDI 1.4 TSI 1.6 TDI	70 - 81 66 - 81 66 92 85	05/17→04/19 05/15→05/17 05/15→04/19 05/15→04/19 05/15→04/19		+PR 1ZC	2	**11.8171-0008.1**	**990049**	ATE
1.2 1.2 TSI 1.4 TSI 1.6 1.6 TDI	55 63 - 77 90 77 - 81 66 - 77	07/12→06/15 07/12→06/15 07/12→06/15 07/13→04/19 07/12→06/15		+PR 1ZG	2	**11.8171-0008.1**	**990049**	ATE
				for brake disc diameter [mm]: 288	2	**11.8171-0008.1**	**990049**	ATE
Brake Disc								
1.0 TSI 1.2 1.2 TSI 1.4 TDI 1.4 TSI 1.6 1.6 TDI	70 - 81 55 63 - 81 66 90 - 92 77 - 81 66 - 85	05/17→04/19 07/12→06/15 07/12→05/17 05/15→04/19 07/12→04/19 07/13→04/19 07/12→04/19	➡			**24.0109-0123.1**	**409123**	Ø 230 Brake Disc Thickness [mm] 9 Minimum thickness [mm] 7 + S
Sensor, wheel speed								
1.0 TSI 1.2 1.2 TSI 1.4 TDI 1.4 TSI 1.6 1.6 TDI	70 - 81 55 63 - 81 66 90 - 92 77 - 81 66 - 85	05/17→04/19 07/12→06/15 07/12→05/17 05/15→04/19 07/12→04/19 07/13→04/19 07/12→04/19	⬅ ⬅	◪ ◪		**24.0711-5273.3** **24.0711-5274.3**	**360303** **360304**	
Accessory Kit, brake shoes								
1.0 TSI 1.2 1.2 TSI 1.4 TDI 1.4 TSI 1.6 1.6 TDI	70 - 81 55 63 - 81 66 90 - 92 77 - 81 66 - 85	05/17→04/19 07/12→06/15 07/12→05/17 05/15→04/19 07/12→04/19 07/13→04/19 07/12→04/19	➡			**03.0137-9309.2**	**669309**	AP
Slave Cylinder, clutch								
1.0 TSI 1.2 1.2 TSI 1.4 TDI 1.4 TSI	70 - 81 55 63 - 81 66 90 - 92	05/17→04/19 07/12→06/15 07/12→05/17 05/15→04/19 07/12→04/19		+PR 0EM		**24.2519-1706.3**	**040096**	Ø 19

	kW				! #			
SEAT - TOLEDO IV (KG3) 07/12→04/19								
Slave Cylinder, clutch								
1.6 1.6 TDI	77 - 81 66 - 85	07/13→04/19 07/12→04/19		+PR 0EM		**24.2519-1706.3**	**040096**	Ø 19
SKODA - CITIGO (NF1) 10/11→08/19								
Sensor, wheel speed								
1.0	44 - 55	10/11→08/19	←	05/12→;		**24.0711-5273.3**	**360303**	
			←	05/12→;		**24.0711-5274.3**	**360304**	
1.0 CNG	50	11/12→08/19	←			**24.0711-5273.3**	**360303**	
			←			**24.0711-5274.3**	**360304**	
SKODA - E-CITIGO (NE1) 09/19→								
Guide Bolt, brake caliper								
e iV	61	09/19→	←		2	**11.8171-0008.1**	**990049**	ATE
Sensor, wheel speed								
e iV	61	09/19→	←			**24.0711-5273.3**	**360303**	
			←			**24.0711-5274.3**	**360304**	
SKODA - ENYAQ iV SUV (5AC, 5AZ) 10/20→								
Sensor, wheel speed								
50 60 80 80X 4x4	109 132 150 150	10/20→ 10/20→ 10/20→ 05/21→	← ← → →			**24.0711-5401.3** **24.0711-5402.3** **24.0711-5401.3** **24.0711-5402.3**	**360330** **360331** **360330** **360331**	
SKODA - FABIA I (6Y2) 08/99→03/08								
Brake Disc								
1.4	59	02/06→10/06	→	+PR 1KK / 1KP		**24.0109-0123.1**	**409123**	Ø 230 Brake Disc Thickness [mm] 9 Minimum thickness [mm] 7 + S
1.4 16V 1.4 TDI 2.0	55 - 74 51 - 59 85	12/99→03/08 04/03→03/08 12/99→03/08	→	→ 12/07; +PR 1KK / 1KP		**24.0109-0123.1**	**409123**	Ø 230 Brake Disc Thickness [mm] 9 Minimum thickness [mm] 7 + S
1.9 TDI	74	01/00→03/08	→	02/00→ 12/07; +PR 1KK / 1KP		**24.0109-0123.1**	**409123**	Ø 230 Brake Disc Thickness [mm] 9 Minimum thickness [mm] 7 + S
1.9 TDI RS	96	06/03→03/08	→	09/03→ 12/07; +PR 1KK / 1KP		**24.0109-0123.1**	**409123**	Ø 230 Brake Disc Thickness [mm] 9 Minimum thickness [mm] 7 + S
Sensor, wheel speed								
1.0 1.4	37 50	12/99→08/02 08/99→05/03	←	02/00→;		**24.0711-5273.3**	**360303**	
			←	02/00→;		**24.0711-5274.3**	**360304**	
1.2	40	07/01→04/07	←	08/02→;		**24.0711-5273.3**	**360303**	
			←	08/02→;		**24.0711-5274.3**	**360304**	
1.2 1.4 16V 1.4 TDI 1.9 SDI 2.0	47 55 - 74 51 - 59 47 85	01/03→03/08 12/99→03/08 04/03→03/08 12/99→03/08 12/99→03/08	←	→ 12/07;		**24.0711-5273.3**	**360303**	
			←	→ 12/07;		**24.0711-5274.3**	**360304**	
1.4	44 - 59	08/00→10/06	←			**24.0711-5273.3**	**360303**	
			←			**24.0711-5274.3**	**360304**	
1.9 TDI	74	01/00→03/08	←	02/00→ 12/07;		**24.0711-5273.3**	**360303**	
			←	02/00→ 12/07;		**24.0711-5274.3**	**360304**	
1.9 TDI RS	96	06/03→03/08	←	09/03→ 12/07;		**24.0711-5273.3**	**360303**	
			←	09/03→ 12/07;		**24.0711-5274.3**	**360304**	
Slave Cylinder, clutch								
1.0	37	12/99→08/02		02/00→		**24.2519-1706.3**	**040096**	Ø 19

© 2022 Continental Aftermarket & Services GmbH

	kW				! #			
SKODA - FABIA I (6Y2) 08/99→03/08								
Slave Cylinder, clutch								
1.4	50	08/99→05/03		02/00→		**24.2519-1706.3**	**040096**	Ø 19
1.2	40	07/01→04/07		08/02→		**24.2519-1706.3**	**040096**	Ø 19
1.2 1.4 16V 1.4 TDI 1.9 SDI 2.0	47 55 - 74 51 - 59 47 85	01/03→03/08 12/99→03/08 04/03→03/08 12/99→03/08 12/99→03/08		→ 12/07		**24.2519-1706.3**	**040096**	Ø 19
1.4	44 - 59	08/00→10/06				**24.2519-1706.3**	**040096**	Ø 19
1.9 TDI	74	01/00→03/08		02/00→ 12/07		**24.2519-1706.3**	**040096**	Ø 19
1.9 TDI RS	96	06/03→03/08		09/03→ 12/07		**24.2519-1706.3**	**040096**	Ø 19
SKODA - FABIA I Combi (6Y5) 04/00→12/07								
Brake Disc								
1.4 16V 1.4 TDI 1.9 TDI 2.0	55 - 74 51 - 59 74 85	04/00→12/07 04/03→12/07 04/00→12/07 04/00→12/07	➡	+PR 1KK / 1KP		**24.0109-0123.1**	**409123**	Ø 230 Brake Disc Thickness [mm] 9 Minimum thickness [mm] 7 + S
Sensor, wheel speed								
1.2	40	07/01→12/07	⬅	08/02→; ⊞		**24.0711-5273.3**	**360303**	
			⬅	08/02→; ⊟		**24.0711-5274.3**	**360304**	
1.2 1.4 1.4 16V 1.4 TDI 1.9 SDI 1.9 TDI 2.0	47 44 - 50 55 - 74 51 - 59 47 74 85	01/03→12/07 04/00→05/03 04/00→12/07 04/03→12/07 04/00→12/07 04/00→12/07 04/00→12/07	⬅ ⬅	⊞ ⊟		**24.0711-5273.3** **24.0711-5274.3**	**360303** **360304**	
Slave Cylinder, clutch								
1.2	40	07/01→12/07		08/02→		**24.2519-1706.3**	**040096**	Ø 19
1.2 1.4 1.4 16V 1.4 TDI 1.9 SDI 1.9 TDI 2.0	47 44 - 50 55 - 74 51 - 59 47 74 85	01/03→12/07 04/00→05/03 04/00→12/07 04/03→12/07 04/00→12/07 04/00→12/07 04/00→12/07				**24.2519-1706.3**	**040096**	Ø 19
SKODA - FABIA I Praktik (6Y5) 01/00→12/07								
Brake Disc								
1.4 TDI	51 - 55	08/04→12/07	➡	+PR 1KK / 1KP		**24.0109-0123.1**	**409123**	Ø 230 Brake Disc Thickness [mm] 9 Minimum thickness [mm] 7 + S
1.9 TDI	74	01/00→12/07	➡	02/00→; +PR 1KK / 1KP		**24.0109-0123.1**	**409123**	Ø 230 Brake Disc Thickness [mm] 9 Minimum thickness [mm] 7 + S
Sensor, wheel speed								
1.2	40	07/01→12/07	⬅	08/02→; ⊞		**24.0711-5273.3**	**360303**	
			⬅	08/02→; ⊟		**24.0711-5274.3**	**360304**	
1.2 1.4 1.4 TDI 1.9 SDI	47 44 - 55 51 - 55 47	01/03→12/07 04/00→12/07 08/04→12/07 07/01→12/07	⬅ ⬅	⊞ ⊟		**24.0711-5273.3** **24.0711-5274.3**	**360303** **360304**	
1.9 TDI	74	01/00→12/07	⬅	02/00→; ⊞		**24.0711-5273.3**	**360303**	
			⬅	02/00→; ⊟		**24.0711-5274.3**	**360304**	
Slave Cylinder, clutch								
1.2	40	07/01→12/07		08/02→		**24.2519-1706.3**	**040096**	Ø 19

	kW				! #			
SKODA - FABIA I Praktik (6Y5) 01/00→12/07								
Slave Cylinder, clutch								
1.2 1.4 1.4 TDI 1.9 SDI	47 44 - 55 51 - 55 47	01/03→12/07 04/00→12/07 08/04→12/07 07/01→12/07				**24.2519-1706.3**	**040096**	Ø 19
1.9 TDI	74	01/00→12/07		02/00→		**24.2519-1706.3**	**040096**	Ø 19
SKODA - FABIA I Saloon (6Y3) 10/99→12/07								
Brake Disc								
1.4 16V 1.4 TDI 2.0	55 - 74 51 - 59 85	10/99→12/07 04/03→12/07 12/99→12/07	➡	+PR 1KK / 1KP		**24.0109-0123.1**	**409123**	Ø 230 Brake Disc Thickness [mm] 9 Minimum thickness [mm] 7 + S
1.9 TDI	74	01/00→12/07	➡	02/00→; +PR 1KK / 1KP		**24.0109-0123.1**	**409123**	Ø 230 Brake Disc Thickness [mm] 9 Minimum thickness [mm] 7 + S
Sensor, wheel speed								
1.2	40	07/01→12/07	⬅	08/02→; ⊞		**24.0711-5273.3**	**360303**	
			⬅	08/02→; ⊟		**24.0711-5274.3**	**360304**	
1.2 1.4 1.4 16V 1.4 TDI 2.0	47 44 - 50 55 - 74 51 - 59 85	01/03→12/07 04/00→05/03 10/99→12/07 04/03→12/07 12/99→12/07	⬅ ⬅	⊞ ⊟		**24.0711-5273.3** **24.0711-5274.3**	**360303** **360304**	
1.9 SDI	47	11/99→12/07	⬅	12/99→; ⊞		**24.0711-5273.3**	**360303**	
			⬅	12/99→; ⊟		**24.0711-5274.3**	**360304**	
1.9 TDI	74	01/00→12/07	⬅	02/00→; ⊞		**24.0711-5273.3**	**360303**	
			⬅	02/00→; ⊟		**24.0711-5274.3**	**360304**	
Slave Cylinder, clutch								
1.2	40	07/01→12/07		08/02→		**24.2519-1706.3**	**040096**	Ø 19
1.2 1.4 1.4 16V 1.4 TDI 2.0	47 44 - 50 55 - 74 51 - 59 85	01/03→12/07 04/00→05/03 10/99→12/07 04/03→12/07 12/99→12/07				**24.2519-1706.3**	**040096**	Ø 19
1.9 SDI	47	11/99→12/07		12/99→		**24.2519-1706.3**	**040096**	Ø 19
1.9 TDI	74	01/00→12/07		02/00→		**24.2519-1706.3**	**040096**	Ø 19
SKODA - FABIA II (542) 12/06→12/14								
Brake Master Cylinder								
1.2 1.4 1.4 LPG	44 - 51 63 63	12/06→12/14 01/07→12/14 01/07→11/14		03/07→ 06/14; +PR 1AC / 1AR / 1LB / 1LM; for left-hand drive vehicles; + ABS		**24.2119-1712.3**	**010912**	Ø 19 without brake fluid reservoir
1.2 12V 1.2 LPG 1.2 TDI 1.2 TSI 1.4 TSI RS 1.6 1.6 TDI	44 51 55 63 - 77 132 77 55 - 77	11/11→12/14 07/07→11/14 05/10→12/14 03/10→12/14 05/10→12/14 04/07→12/14 03/10→12/14		→ 06/14; +PR 1AC / 1AR / 1LB / 1LM; for left-hand drive vehicles; + ABS		**24.2119-1712.3**	**010912**	Ø 19 without brake fluid reservoir
1.2 12V 1.2 LPG 1.9 TDI	55 44 77	10/10→12/14 03/09→11/11 04/07→03/10		+PR 1AC / 1AR / 1LB / 1LM; for left-hand drive vehicles; + ABS		**24.2119-1712.3**	**010912**	Ø 19 without brake fluid reservoir
1.4 TDI	51 - 59	01/07→03/10		03/07→; +PR 1AC / 1AR / 1LB / 1LM; for left-hand drive vehicles; + ABS		**24.2119-1712.3**	**010912**	Ø 19 without brake fluid reservoir
Brake Disc								
1.2 1.4 1.4 LPG	44 - 51 63 63	12/06→12/14 01/07→12/14 01/07→11/14	➡	03/07→ 06/14; +PR 1KT / 2EJ / 1KK / 1KV		**24.0109-0123.1**	**409123**	Ø 230 Brake Disc Thickness [mm] 9 Minimum thickness [mm] 7 + S

© 2022 Continental Aftermarket & Services GmbH

	kW				! #			
SKODA - FABIA II (542) 12/06→12/14								
Brake Disc								
1.2 12V 1.2 LPG 1.6	44 51 77	11/11→12/14 07/07→11/14 04/07→12/14	➡	→ 06/14; +PR 1KT / 2EJ / 1KK / 1KV		**24.0109-0123.1**	**409123**	Ø 230 Brake Disc Thickness [mm] 9 Minimum thickness [mm] 7 + S
1.2 12V 1.2 LPG	55 44	10/10→12/14 03/09→11/11	➡	+PR 1KT / 2EJ / 1KK / 1KV		**24.0109-0123.1**	**409123**	Ø 230 Brake Disc Thickness [mm] 9 Minimum thickness [mm] 7 + S
1.2 TDI 1.2 TSI 1.4 TSI RS 1.6 TDI	55 63 - 77 132 55 - 77	05/10→12/14 03/10→12/14 05/10→12/14 03/10→12/14	➡	→ 06/14; +PR 1KT / 1KV / 2EJ		**24.0109-0123.1**	**409123**	Ø 230 Brake Disc Thickness [mm] 9 Minimum thickness [mm] 7 + S
1.4 TDI	51 - 59	01/07→03/10	➡	03/07→; +PR 1KT / 2EJ / 1KK / 1KV		**24.0109-0123.1**	**409123**	Ø 230 Brake Disc Thickness [mm] 9 Minimum thickness [mm] 7 + S
1.9 TDI	77	04/07→03/10	➡	06/09→; +PR 1KT / 2EJ / 1KK / 1KV		**24.0109-0123.1**	**409123**	Ø 230 Brake Disc Thickness [mm] 9 Minimum thickness [mm] 7 + S
Sensor, wheel speed								
1.2	44 - 51	12/06→12/14	⬅	03/07→ 06/14; ◪		**24.0711-5273.3**	**360303**	
1.4 1.4 LPG	63 63	01/07→12/14 01/07→11/14	⬅	03/07→ 06/14; ◪		**24.0711-5274.3**	**360304**	
1.2 12V 1.2 LPG 1.2 TDI 1.2 TSI 1.4 TSI RS 1.6 1.6 TDI	44 51 55 63 - 77 132 77 55 - 77	11/11→12/14 07/07→11/14 05/10→12/14 03/10→12/14 05/10→12/14 04/07→12/14 03/10→12/14	⬅	→ 06/14; ◪		**24.0711-5273.3**	**360303**	
			⬅	→ 06/14; ◪		**24.0711-5274.3**	**360304**	
1.2 12V 1.2 LPG 1.9 TDI	55 44 77	10/10→12/14 03/09→11/11 04/07→03/10	⬅	◪		**24.0711-5273.3**	**360303**	
			⬅	◪		**24.0711-5274.3**	**360304**	
1.4 TDI	51 - 59	01/07→03/10	⬅	03/07→; ◪		**24.0711-5273.3**	**360303**	
			⬅	03/07→; ◪		**24.0711-5274.3**	**360304**	
Slave Cylinder, clutch								
1.2 1.4 1.4 LPG	44 - 51 63 63	12/06→12/14 01/07→12/14 01/07→11/14		03/07→ 06/14; +PR 0EM		**24.2519-1706.3**	**040096**	Ø 19
1.2 12V 1.2 LPG 1.2 TDI 1.2 TSI 1.4 TSI RS 1.6 1.6 TDI	44 51 55 63 - 77 132 77 55 - 77	11/11→12/14 07/07→11/14 05/10→12/14 03/10→12/14 05/10→12/14 04/07→12/14 03/10→12/14		→ 06/14; +PR 0EM		**24.2519-1706.3**	**040096**	Ø 19
1.2 12V 1.2 LPG 1.9 TDI	55 44 77	10/10→12/14 03/09→11/11 04/07→03/10		+PR 0EM		**24.2519-1706.3**	**040096**	Ø 19
1.4 TDI	51	02/07→03/10		03/07→; +PR 0EM		**24.2519-1706.3**	**040096**	Ø 19
1.4 TDI	59	01/07→03/10		03/07→; -PR 0EM		**24.2519-1706.3**	**040096**	Ø 19
SKODA - FABIA II Combi (545) 10/07→12/14								
Brake Master Cylinder								
1.2 1.2 12V 1.2 LPG 1.2 TDI 1.2 TSI 1.4 1.4 LPG 1.4 TSI RS 1.6 1.6 TDI	44 - 51 44 51 55 63 - 77 63 63 132 77 55 - 77	10/07→12/14 11/11→12/14 10/07→11/14 05/10→12/14 03/10→12/14 10/07→12/14 10/07→11/14 05/10→12/14 10/07→12/14 03/10→12/14		→ 06/14; +PR 1AC / 1AR / 1LB / 1LM; for left-hand drive vehicles; + ABS		**24.2119-1712.3**	**010912**	Ø 19 without brake fluid reservoir
1.2 LPG 1.4 TDI 1.9 TDI	44 51 - 59 77	03/09→11/11 10/07→03/10 10/07→03/10		+PR 1AC / 1AR / 1LB / 1LM; for left-hand drive vehicles; + ABS		**24.2119-1712.3**	**010912**	Ø 19 without brake fluid reservoir

	kW				! #			
SKODA - FABIA II Combi (545) 10/07→12/14								
Brake Disc								
1.2	44 - 51	10/07→12/14	➡	→ 06/14; +PR 1KT / 2EJ / 1KK / 1KV		**24.0109-0123.1**	**409123**	Ø 230 Brake Disc Thickness [mm] 9 Minimum thickness [mm] 7 + S
1.2 12V	44	11/11→12/14						
1.2 LPG	51	10/07→11/14						
1.4	63	10/07→12/14						
1.4 LPG	63	10/07→11/14						
1.6	77	10/07→12/14						
1.2 LPG	44	03/09→11/11	➡	+PR 1KT / 2EJ / 1KK / 1KV		**24.0109-0123.1**	**409123**	Ø 230 Brake Disc Thickness [mm] 9 Minimum thickness [mm] 7 + S
1.4 TDI	51 - 59	10/07→03/10						
1.9 TDI	77	10/07→03/10						
1.2 TDI	55	05/10→12/14	➡	→ 06/14; +PR 1KT / 1KV / 2EJ		**24.0109-0123.1**	**409123**	Ø 230 Brake Disc Thickness [mm] 9 Minimum thickness [mm] 7 + S
1.2 TSI	63 - 77	03/10→12/14						
1.4 TSI RS	132	05/10→12/14						
1.6 TDI	55 - 77	03/10→12/14						
Sensor, wheel speed								
1.2	44 - 51	10/07→12/14	⬅	→ 06/14; ◪		**24.0711-5273.3**	**360303**	
1.2 12V	44	11/11→12/14	⬅	→ 06/14; ◪		**24.0711-5274.3**	**360304**	
1.2 LPG	51	10/07→11/14						
1.2 TDI	55	05/10→12/14						
1.2 TSI	63 - 77	03/10→12/14						
1.4	63	10/07→12/14						
1.4 LPG	63	10/07→11/14						
1.4 TSI RS	132	05/10→12/14						
1.6	77	10/07→12/14						
1.6 TDI	55 - 77	03/10→12/14						
1.2 LPG	44	03/09→11/11	⬅	◪		**24.0711-5273.3**	**360303**	
1.4 TDI	51 - 59	10/07→03/10	⬅	◪		**24.0711-5274.3**	**360304**	
1.9 TDI	77	10/07→03/10						
Slave Cylinder, clutch								
1.2	44 - 51	10/07→12/14		→ 06/14; +PR 0EM		**24.2519-1706.3**	**040096**	Ø 19
1.2 12V	44	11/11→12/14						
1.2 LPG	51	10/07→11/14						
1.2 TDI	55	05/10→12/14						
1.2 TSI	63 - 77	03/10→12/14						
1.4	63	10/07→12/14						
1.4 LPG	63	10/07→11/14						
1.4 TSI RS	132	05/10→12/14						
1.6	77	10/07→12/14						
1.6 TDI	55 - 77	03/10→12/14						
1.2 LPG	44	03/09→11/11		+PR 0EM		**24.2519-1706.3**	**040096**	Ø 19
1.4 TDI	51	10/07→03/10						
1.9 TDI	77	10/07→03/10						
1.4 TDI	59	10/07→03/10		-PR 0EM		**24.2519-1706.3**	**040096**	Ø 19
SKODA - FABIA III (NJ3) 08/14→								
Guide Bolt, brake caliper								
1.0	44 - 55	08/14→		+PR 1ZC	2	**11.8171-0008.1**	**990049**	ATE
1.0 TSI	70 - 81	08/14→	⬅	+PR 1ZG	2	**11.8171-0008.1**	**990049**	ATE
1.2 TSI	66 - 81	08/14→						
1.4 TDI	66 - 77	08/14→						
1.4 TSI R5	92	02/18→						
1.6	81	01/15→						
1.4 TDI	55	05/15→		+PR 1ZC	2	**11.8171-0008.1**	**990049**	ATE
Brake Disc								
1.0	44 - 55	08/14→	➡	+PR 1KK / 1KT / 2EJ		**24.0109-0123.1**	**409123**	Ø 230 Brake Disc Thickness [mm] 9 Minimum thickness [mm] 7 + S
1.0 TSI	70 - 81	08/14→						
1.2 TSI	66 - 81	08/14→						
1.4 TDI	66 - 77	08/14→						
1.4 TSI R5	92	02/18→						

© 2022 Continental Aftermarket & Services GmbH

	kW				! #			
SKODA - FABIA III (NJ3) 08/14→								
Brake Disc								
1.4 TDI 1.6	55 81	05/15→ 01/15→	➡	+PR 1KT		**24.0109-0123.1**	**409123**	Ø 230 Brake Disc Thickness [mm] 9 Minimum thickness [mm] 7 + S
Sensor, wheel speed								
1.0	44 - 55	08/14→	⬅			**24.0711-5273.3**	**360303**	
1.0 TSI 1.2 TSI 1.4 TDI 1.4 TSI R5 1.6	70 - 81 66 - 81 55 - 77 92 81	08/14→ 08/14→ 08/14→ 02/18→ 01/15→	⬅			**24.0711-5274.3**	**360304**	
Slave Cylinder, clutch								
1.0	44 - 55	08/14→		+PR 0EM		**24.2519-1706.3**	**040096**	Ø 19
1.0 TSI 1.2 TSI 1.4 TDI 1.4 TSI R5 1.6	70 - 81 66 - 81 55 - 77 92 81	08/14→ 08/14→ 08/14→ 02/18→ 01/15→						
SKODA - FABIA III Estate (NJ5) 08/14→								
Guide Bolt, brake caliper								
1.0	44 - 55	10/14→		+PR 1ZC	2	**11.8171-0008.1**	**990049**	ATE
1.0 TSI 1.2 TSI 1.4 TDI 1.6	70 - 81 66 - 81 66 - 77 81	08/14→ 10/14→ 10/14→ 01/15→	⬅	+PR 1ZG	2	**11.8171-0008.1**	**990049**	ATE
1.4 TDI	55	05/15→		+PR 1ZC	2	**11.8171-0008.1**	**990049**	ATE
Brake Disc								
1.0	44 - 55	10/14→	➡	+PR 1KK / 1KT / 2EJ		**24.0109-0123.1**	**409123**	Ø 230 Brake Disc Thickness [mm] 9 Minimum thickness [mm] 7 + S
1.0 TSI 1.2 TSI 1.4 TDI	70 - 81 66 - 81 66 - 77	08/14→ 10/14→ 10/14→						
1.4 TDI 1.6	55 81	05/15→ 01/15→	➡	+PR 1KT		**24.0109-0123.1**	**409123**	Ø 230 Brake Disc Thickness [mm] 9 Minimum thickness [mm] 7 + S
Sensor, wheel speed								
1.0	44 - 55	10/14→	⬅			**24.0711-5273.3**	**360303**	
1.0 TSI 1.2 TSI 1.4 TDI 1.6	70 - 81 66 - 81 55 - 77 81	08/14→ 10/14→ 10/14→ 01/15→	⬅			**24.0711-5274.3**	**360304**	
Slave Cylinder, clutch								
1.0	44 - 55	10/14→		+PR 0EM		**24.2519-1706.3**	**040096**	Ø 19
1.0 TSI 1.2 TSI 1.4 TDI 1.6	70 - 81 66 - 81 55 - 77 81	08/14→ 10/14→ 10/14→ 01/15→						

	kW				! #			
SKODA - FABIA IV (PJ3) 06/21→								
Brake Disc								
1.0 MPI 1.0 TSI	48 - 59 70 - 81	06/21→ 06/21→	←	+PR 1ZG		**24.0122-0312.1**	**422312**	Ø 256 Brake Disc Thickness [mm] 22 Minimum thickness [mm] 19 Vented + S
			←	+PR 1ZE		**24.0124-0263.1**	**424263**	Ø 275.7 Brake Disc Thickness [mm] 24 Minimum thickness [mm] 21 Vented + S
			→	+PR 1KV		**24.0109-0123.1**	**409123**	Ø 230 Brake Disc Thickness [mm] 9 Minimum thickness [mm] 7 + S
Wheel Brake Cylinder								
1.0 MPI 1.0 TSI	48 - 59 70 - 81	06/21→ 06/21→	→	+PR 1KG	2	**24.3220-1757.3**	**020605**	ALU
			→	+PR 1KA	2	**24.3220-1757.3**	**020605**	ALU
Accessory Kit, brake shoes								
1.0 MPI 1.0 TSI	48 - 59 70 - 81	06/21→ 06/21→	→	+PR 1KA		**03.0137-9309.2**	**669309**	AP
			→	+PR 1KG		**03.0137-9317.2**	**669317**	
Brake Shoe Set								
1.0 MPI 1.0 TSI	48 - 59 70 - 81	06/21→ 06/21→	→	+PR 1KG		**03.0137-0539.2**	**650539**	Ø 203 Width [mm] 38 + HEB
			→	+PR 1KA		**03.0137-0540.2**	**650540**	Ø 228 Width [mm] 42 + HEB
SKODA - KAMIQ (NW4) 07/19→								
Brake Disc								
1.0 TGI CNG 1.0 TSI 1.5 TSI 1.6 SRE 1.6 TDI	66 70 - 85 110 81 70 - 85	11/19→ 07/19→ 07/19→ 07/19→ 07/19→	←	+PR 1ZG		**24.0122-0312.1**	**422312**	Ø 256 Brake Disc Thickness [mm] 22 Minimum thickness [mm] 19 Vented + S
			←	+PR 1ZE / 1ZS		**24.0124-0263.1**	**424263**	Ø 275.7 Brake Disc Thickness [mm] 24 Minimum thickness [mm] 21 Vented + S
			→	+PR 1KV		**24.0109-0123.1**	**409123**	Ø 230 Brake Disc Thickness [mm] 9 Minimum thickness [mm] 7 + S
Sensor, wheel speed								
1.0 TGI CNG 1.0 TSI 1.5 TSI 1.6 SRE 1.6 TDI	66 70 - 85 110 81 70 - 85	11/19→ 07/19→ 07/19→ 07/19→ 07/19→	←	→ 11/19; ■		**24.0711-5273.3**	**360303**	
			←	→ 11/19; ■		**24.0711-5274.3**	**360304**	
Wheel Brake Cylinder								
1.0 TGI CNG 1.0 TSI 1.5 TSI 1.6 SRE 1.6 TDI	66 70 - 85 110 81 70 - 85	11/19→ 07/19→ 07/19→ 07/19→ 07/19→	→	+PR 1KA	2	**24.3220-1757.3**	**020605**	ALU
Accessory Kit, brake shoes								
1.0 TGI CNG 1.0 TSI 1.5 TSI 1.6 SRE 1.6 TDI	66 70 - 85 110 81 70 - 85	11/19→ 07/19→ 07/19→ 07/19→ 07/19→	→	+PR 1KA		**03.0137-9309.2**	**669309**	AP
Brake Shoe Set								
1.0 TGI CNG 1.0 TSI 1.5 TSI 1.6 SRE	66 70 - 85 110 81	11/19→ 07/19→ 07/19→ 07/19→	→	+PR 1KA		**03.0137-0540.2**	**650540**	Ø 228 Width [mm] 42 + HEB

© 2022 Continental Aftermarket & Services GmbH

	kW				! #			
SKODA - KAMIQ (NW4) 07/19→								
Brake Shoe Set								
1.6 TDI	70 - 85	07/19→		+PR 1KA		**03.0137-0540.2**	**650540**	Ø 228 Width [mm] 42 + HEB
SKODA - KAROQ (NU7, ND7) 07/17→								
Brake Master Cylinder								
1.0 TSI	81 - 85	07/17→		for left-hand drive vehicles		**24.4123-1719.3**	**011017**	TRW Ø 23.8 without brake fluid reservoir
1.4 TSI	110	07/17→						
1.5 TSI	110	07/17→						
1.5 TSI 4x4	110	07/17→						
1.6 SRE	81	07/17→						
1.6 TDI	85	07/17→						
2.0 TDI	85 - 110	07/17→						
2.0 TDI 4x4	85 - 140	07/17→						
2.0 TSI 4x4	140	04/19→						
Brake Caliper								
1.0 TSI	81 - 85	07/17→	←	+PR 1ZA;		**24.3571-1801.5**	**241387**	without holder
1.4 TSI	110	07/17→	←	+PR 1ZA;		**24.3571-1802.5**	**241388**	without holder
1.6 SRE	81	07/17→	→	+PR 1KE;		**24.6238-7023.5**	**241241**	ATE without holder + eFSB
1.6 TDI	85	07/17→				**24.6238-7047.5**	**241181**	ATE without holder + eFSB
2.0 TDI	85 - 110	07/17→	→	+PR 1KE;		**24.6238-7024.5**	**241242**	ATE without holder + eFSB
2.0 TDI 4x4	85	07/20→				**24.6238-7048.5**	**241182**	ATE without holder + eFSB
2.0 TSI 4x4	140	04/19→						
1.5 TSI	110	07/17→	←	10/17→; +PR 1ZA;		**24.3571-1801.5**	**241387**	without holder
1.5 TSI 4x4	110	07/17→	←	10/17→; +PR 1ZA;		**24.3571-1802.5**	**241388**	without holder
2.0 TDI 4x4	110 - 140	07/17→	→	10/17→; +PR 1KE;		**24.6238-7023.5**	**241241**	ATE without holder + eFSB
						24.6238-7047.5	**241181**	ATE without holder + eFSB
			→	10/17→; +PR 1KE;		**24.6238-7024.5**	**241242**	ATE without holder + eFSB
						24.6238-7048.5	**241182**	ATE without holder + eFSB
Brake Pad Set, disc brake								
1.0 TSI	81 - 85	07/17→	←	+PR 1ZA		**13.0460-2785.2**	**602785**	TRW 25683 20,4 + WE / + WK
						13.0470-2785.2	**LD2785**	TRW 25683 20,4 + WE / + WK Ceramic
1.4 TSI	110	07/17→	→	+PR 1KE; + eFSB		**13.0460-7293.2**	**607293**	ATE 25008 16,3 - WE / - WK
1.5 TSI	110	07/17→				**13.0470-7293.2**	**LD7293**	ATE 25008 16,3 - WE / - WK Ceramic
1.5 TSI 4x4	110	07/17→						
1.6 SRE	81	07/17→						
2.0 TDI	85	11/20→						
2.0 TDI 4x4	85 - 140	07/17→						
2.0 TSI 4x4	140	04/19→						
1.6 TDI	85	07/17→	←			**13.0460-2785.2**	**602785**	TRW 25683 20,4 + WE / + WK
2.0 TDI	110	07/17→	←	+PR 1ZA		**13.0470-2785.2**	**LD2785**	TRW 25683 20,4 + WE / + WK Ceramic
			→	+PR 1KE; + eFSB		**13.0460-7293.2**	**607293**	ATE 25008 16,3 - WE / - WK
						13.0470-7293.2	**LD7293**	ATE 25008 16,3 - WE / - WK Ceramic
Warning Contact, brake pad wear								
1.0 TSI	81 - 85	07/17→	←		1	**24.8190-0065.2**	**620065**	
1.4 TSI	110	07/17→						
1.6 SRE	81	07/17→						
2.0 TDI	85	11/20→						
2.0 TDI 4x4	85	07/20→						
2.0 TSI 4x4	140	04/19→						
1.5 TSI	110	07/17→	←	+PR 1ZA	1	**24.8190-0065.2**	**620065**	
1.5 TSI 4x4	110	07/17→						
1.6 TDI	85	07/17→						
2.0 TDI	110	07/17→						
2.0 TDI 4x4	110 - 140	07/17→						
Brake Disc								
1.0 TSI	81 - 85	07/17→	←	+PR 1ZA		**24.0125-0158.1**	**425158**	Ø 312 Brake Disc Thickness [mm] 25 Minimum thickness [mm] 22 Vented + S
1.4 TSI	110	07/17→						
1.5 TSI	110	07/17→						
1.5 TSI 4x4	110	07/17→	→	+PR 1KE; Observe dimensions; + H 48.2 mm		**24.0110-0356.1**	**410356**	Ø 272 Brake Disc Thickness [mm] 9.7 Minimum thickness [mm] 8 + S
1.6 SRE	81	07/17→						
1.6 TDI	85	07/17→						

	kW				! #			
SKODA - KAROQ (NU7, ND7) 07/17→								
Brake Disc								
2.0 TDI	85 - 110	07/17→	➡	+PR 1KE; Observe dimensions; + H 58.3 mm		**24.0110-0409.1**	**410409**	Ø 272 Brake Disc Thickness [mm] 10 Minimum thickness [mm] 8 + S
2.0 TDI 4x4	85 - 140	07/17→						
2.0 TSI 4x4	140	04/19→						
Sensor, wheel speed								
1.0 TSI	81 - 85	07/17→	⬅	◪		**24.0711-5273.3**	**360303**	
1.4 TSI	110	07/17→	⬅	◩		**24.0711-5274.3**	**360304**	
1.5 TSI	110	07/17→	➡		2	**24.0711-6337.3**	**360390**	
1.6 SRE	81	07/17→						
1.6 TDI	85	07/17→						
2.0 TDI	85 - 110	07/17→						
2.0 TDI 4x4	85	07/20→						
2.0 TSI 4x4	140	04/19→						
1.5 TSI 4x4	110	07/17→	⬅	◪		**24.0711-5273.3**	**360303**	
2.0 TDI 4x4	110 - 140	07/17→	⬅	◩		**24.0711-5274.3**	**360304**	
			➡	◪		**24.0711-5401.3**	**360330**	
			➡	◩		**24.0711-5402.3**	**360331**	
Control Element, parking brake caliper								
1.0 TSI	81 - 85	07/17→	➡	+PR 1KE; ◪		**11.9282-1001.3**	**250159**	ATE
1.4 TSI	110	07/17→	➡	+PR 1KE; ◩		**11.9282-1002.3**	**250160**	ATE
1.5 TSI	110	07/17→						
1.5 TSI 4x4	110	07/17→						
1.6 SRE	81	07/17→						
1.6 TDI	85	07/17→						
2.0 TDI	85 - 110	07/17→						
2.0 TDI 4x4	85 - 140	07/17→						
2.0 TSI 4x4	140	04/19→						
SKODA - KODIAQ (NS7, NV7, NS6) 10/16→								
Brake Master Cylinder								
1.4 TSI	92 - 110	10/16→		for left-hand drive vehicles; +PR 1ZA		**24.4123-1719.3**	**011017**	TRW Ø 23.8 without brake fluid reservoir
1.4 TSI 4x4	110	10/16→						
1.5 TSI	110	07/18→						
1.5 TSI 4x4	110	07/18→						
2.0 RS 4x4	180	06/21→						
2.0 RS Bi-TDI 4x4	176	11/18→						
2.0 TDI	85 - 110	10/16→						
2.0 TDI 4x4	110 - 147	10/16→						
2.0 TSI 4x4	132 - 140	10/16→						
Brake Caliper								
1.4 TSI	92 - 110	10/16→	⬅	+PR 1ZA / 1ZK; ◪		**24.3571-1801.5**	**241387**	without holder
1.4 TSI 4x4	110	10/16→	⬅	+PR 1ZA / 1ZK; ◩		**24.3571-1802.5**	**241388**	without holder
1.5 TSI	110	07/18→	⬅	+PR 1LA / 1LW; ◪		**24.3601-1727.5**	**240786**	TRW without holder
1.5 TSI 4x4	110	07/18→	⬅	+PR 1LA / 1LW; ◩		**24.3601-1728.5**	**240787**	TRW without holder
2.0 RS 4x4	180	06/21→	➡	+PR 1KU / 2EM; ◪		**24.6242-7005.5**	**241337**	ATE + EMot / without holder + eFSB
2.0 RS Bi-TDI 4x4	176	11/18→	➡	+PR 1KU / 2EM; ◩		**24.6242-7006.5**	**241338**	ATE + EMot / without holder + eFSB
2.0 TDI	85 - 110	10/16→	➡	+PR 1KJ / 2ET / 2EY; ◪		**24.6242-7017.5**	**241185**	ATE without holder + eFSB
2.0 TDI 4x4	110 - 147	10/16→	➡	+PR 1KJ / 2ET / 2EY; ◩		**24.6242-7018.5**	**241186**	ATE without holder + eFSB
2.0 TSI 4x4	132 - 140	10/16→						
Brake Pad Set, disc brake								
1.4 TSI	92 - 110	10/16→	⬅	+PR 1LA / 1LG / 1LW		**13.0460-2617.2** **13.0470-2617.2**	**602617** **LD2617**	TRW + WK TRW + WK Ceramic
1.4 TSI 4x4	110	10/16→	⬅	+PR 1ZA / 1ZK		**13.0460-2785.2** **13.0470-2785.2**	**602785** **LD2785**	TRW 25683 20,4 + WE / + WK TRW 25683 20,4 + WE / + WK Ceramic
1.5 TSI	110	07/18→						
1.5 TSI 4x4	110	07/18→						
2.0 RS 4x4	180	06/21→						
2.0 RS Bi-TDI 4x4	176	11/18→	➡	+PR 1KJ / 1KU / 2EM / 2ET / 2EY		**13.0460-7294.2** **13.0470-7294.2**	**607294** **LD7294**	ATE 25009 16,4 - WE / - WK ATE 25009 16,4 - WE / - WK Ceramic
2.0 TDI	85 - 110	10/16→						

© 2022 Continental Aftermarket & Services GmbH

SKODA - KODIAQ (NS7, NV7, NS6) 10/16→

	kW				! #			
Brake Pad Set, disc brake								
2.0 TDI 4x4	110 - 147	10/16→	←	+PR 1LA / 1LG / 1LW		**13.0460-2617.2**	**602617**	TRW + WK
						13.0470-2617.2	**LD2617**	TRW + WK Ceramic
2.0 TSI 4x4	132 - 140	10/16→	←	+PR 1ZA / 1ZK		**13.0460-2785.2**	**602785**	TRW 25683 20,4 + WE / + WK
						13.0470-2785.2	**LD2785**	TRW 25683 20,4 + WE / + WK Ceramic
			→	+PR 1KJ / 1KU / 2EM / 2ET / 2EY		**13.0460-7294.2**	**607294**	ATE 25009 16,4 - WE / - WK
						13.0470-7294.2	**LD7294**	ATE 25009 16,4 - WE / - WK Ceramic
Warning Contact, brake pad wear								
1.4 TSI	92 - 110	10/16→	←		1	**24.8190-0065.2**	**620065**	
1.4 TSI 4x4	110	10/16→						
1.5 TSI	110	07/18→						
1.5 TSI 4x4	110	07/18→						
2.0 RS 4x4	180	06/21→						
2.0 RS Bi-TDI 4x4	176	11/18→						
2.0 TDI	85 - 110	10/16→						
2.0 TDI 4x4	110 - 147	10/16→						
2.0 TSI 4x4	132 - 140	10/16→						
Brake Disc								
1.4 TSI	92 - 110	10/16→	←	+PR 1ZA / 1ZK		**24.0125-0158.1**	**425158**	Ø 312 Brake Disc Thickness [mm] 25 Minimum thickness [mm] 22 Vented + S
1.4 TSI 4x4	110	10/16→						
1.5 TSI	110	07/18→						
1.5 TSI 4x4	110	07/18→				**24.0325-0158.1**	**525158**	Ø 312 Brake Disc Thickness [mm] 25 Minimum thickness [mm] 22 Vented + S
2.0 RS 4x4	180	06/21→						
2.0 RS Bi-TDI 4x4	176	11/18→						
2.0 TDI	85 - 110	10/16→						
2.0 TDI 4x4	110 - 147	10/16→	←	+PR 1LW		**24.0130-0220.1**	**430220**	Ø 314 Brake Disc Thickness [mm] 30 Minimum thickness [mm] 27 Vented + S
2.0 TSI 4x4	132 - 140	10/16→						
			←	+PR 1LA / 1LG		**24.0130-0225.1**	**430225**	Ø 340 Brake Disc Thickness [mm] 30 Minimum thickness [mm] 27 Vented + S
			→	+PR 1KU / 2EM		**24.0112-0210.1**	**412210**	Ø 300 Brake Disc Thickness [mm] 12 Minimum thickness [mm] 10 + S
			→	+PR 1KJ / 2ET / 2EY		**24.0122-0219.1**	**422219**	Ø 310 Brake Disc Thickness [mm] 22 Minimum thickness [mm] 20 Vented
Sensor, wheel speed								
1.4 TSI	92 - 110	10/16→	←			**24.0711-5273.3**	**360303**	
1.5 TSI	110	07/18→	←			**24.0711-5274.3**	**360304**	
2.0 TDI	85 - 110	10/16→	→	→ 07/20	2	**24.0711-6337.3**	**360390**	
1.4 TSI 4x4	110	10/16→	←			**24.0711-5273.3**	**360303**	
1.5 TSI 4x4	110	07/18→	←			**24.0711-5274.3**	**360304**	
2.0 RS Bi-TDI 4x4	176	11/18→	→	→ 11/19;		**24.0711-5401.3**	**360330**	
2.0 TDI 4x4	110 - 140	10/16→	→	12/19→;		**24.0711-5401.3**	**360330**	
2.0 TSI 4x4	132 - 140	10/16→	→	12/19→;		**24.0711-5402.3**	**360331**	
			→	→ 11/19;		**24.0711-5402.3**	**360331**	
2.0 RS 4x4	180	06/21→	←			**24.0711-5273.3**	**360303**	
2.0 TDI 4x4	147	06/20→	←			**24.0711-5274.3**	**360304**	
			→			**24.0711-5401.3**	**360330**	
			→			**24.0711-5402.3**	**360331**	
Control Element, parking brake caliper								
1.4 TSI	92 - 110	10/16→	→			**11.9282-1001.3**	**250159**	ATE
1.4 TSI 4x4	110	10/16→	→			**11.9282-1002.3**	**250160**	ATE
1.5 TSI	110	07/18→						
1.5 TSI 4x4	110	07/18→						
2.0 RS 4x4	180	06/21→						

© 2022 Continental Aftermarket & Services GmbH

	kW				! #			
SKODA - KODIAQ (NS7, NV7, NS6) 10/16→								
Control Element, parking brake caliper								
2.0 RS Bi-TDI 4x4 2.0 TDI	176 85 - 110	11/18→ 10/16→	➡			**11.9282-1001.3**	**250159**	ATE
2.0 TDI 4x4 2.0 TSI 4x4	110 - 147 132 - 140	10/16→ 10/16→	➡			**11.9282-1002.3**	**250160**	ATE
SKODA - OCTAVIA I (1U2) 09/96→12/10								
Guide Bolt, brake caliper								
1.4 1.6 1.8 T 4x4 1.9 SDI 1.9 TDI 2.0	44 74 110 50 81 85	04/99→03/01 02/97→12/07 05/01→05/06 06/97→12/03 08/97→01/06 04/99→05/07		+PR 1LN / 1LE / 1ZD / 1ZE / 1ZH	2	**11.8171-0008.1**	**990049**	ATE
1.4 16V 1.9 TDI	55 74	09/00→12/10 10/05→12/10		→ 06/10; +PR 1LN / 1LE / 1ZD / 1ZE / 1ZH	2	**11.8171-0008.1**	**990049**	ATE
1.6 1.8 1.9 TDI	55 92 66	09/96→09/04 09/96→07/00 09/96→03/10		10/96→; +PR 1LN / 1LE / 1ZD / 1ZE / 1ZH	2	**11.8171-0008.1**	**990049**	ATE
1.6	75	11/00→12/10		+PR 1LE; +PR 1ZD; +PR 1ZE; → 06/10; +PR 1ZH	2	**11.8171-0008.1**	**990049**	ATE
1.8 T	110	08/97→12/10		03/98→ 06/10; +PR 1LN / 1LE / 1ZD / 1ZE / 1ZH	2	**11.8171-0008.1**	**990049**	ATE
1.9 TDI	96	09/02→09/04		01/03→; +PR 1LN / 1LE / 1ZD / 1ZE / 1ZH	2	**11.8171-0008.1**	**990049**	ATE
RS 1.8 T	132	05/01→01/06		+PR 1ZN	2	**11.8171-0008.1**	**990049**	ATE
Brake Disc								
1.6 1.8 1.9 TDI	55 92 66	09/96→09/04 09/96→07/00 09/96→03/10	➡	10/96→; +PR 1KK / 1KS / 1KP		**24.0109-0123.1**	**409123**	Ø 230 Brake Disc Thickness [mm] 9 Minimum thickness [mm] 7 + S
1.6 1.9 SDI 1.9 TDI 2.0	74 50 81 85	02/97→12/07 06/97→12/03 08/97→01/06 04/99→05/07	➡	+PR 1KK / 1KS / 1KP		**24.0109-0123.1**	**409123**	Ø 230 Brake Disc Thickness [mm] 9 Minimum thickness [mm] 7 + S
1.6 1.9 TDI	75 74	11/00→12/10 10/05→12/10	➡	→ 06/10; +PR 1KK / 1KS / 1KP		**24.0109-0123.1**	**409123**	Ø 230 Brake Disc Thickness [mm] 9 Minimum thickness [mm] 7 + S
1.8 T	110	08/97→12/10	➡	03/98→ 06/10; +PR 1KK / 1KS / 1KP		**24.0109-0123.1**	**409123**	Ø 230 Brake Disc Thickness [mm] 9 Minimum thickness [mm] 7 + S
1.9 TDI	96	09/02→09/04	➡	01/03→; +PR 1KK / 1KS / 1KP		**24.0109-0123.1**	**409123**	Ø 230 Brake Disc Thickness [mm] 9 Minimum thickness [mm] 7 + S
Slave Cylinder, clutch								
1.4	44	04/99→03/01				**24.2519-1706.3**	**040096**	Ø 19
1.4 16V	55	09/00→12/10		→ 06/10		**24.2519-1706.3**	**040096**	Ø 19
SKODA - OCTAVIA I Combi (1U5) 07/98→12/10								
Guide Bolt, brake caliper								
1.4 16V 1.8 T 1.9 TDI 2.0 4x4	55 110 74 88	08/00→12/10 07/98→12/10 08/00→12/10 01/00→12/10		→ 06/10; +PR 1LN / 1LE / 1ZD / 1ZE / 1ZH	2	**11.8171-0008.1**	**990049**	ATE
1.6 1.8 20V 1.8 T 4x4 1.9 SDI 1.9 TDI 1.9 TDI 4x4 2.0	55 - 74 92 110 50 66 - 81 66 - 74 85	07/98→12/07 07/98→07/00 05/01→05/06 07/98→12/03 07/98→03/10 11/99→02/06 04/99→05/07		+PR 1LN / 1LE / 1ZD / 1ZE / 1ZH	2	**11.8171-0008.1**	**990049**	ATE
1.6	75	09/00→12/10		+PR 1LE; +PR 1ZD; +PR 1ZE; → 06/10; +PR 1ZH	2	**11.8171-0008.1**	**990049**	ATE
1.9 TDI	96	09/02→09/04		01/03→; +PR 1LN / 1LE / 1ZD / 1ZE / 1ZH	2	**11.8171-0008.1**	**990049**	ATE
2.0 4x4	85	08/00→09/04		05/01→; +PR 1LN / 1LE / 1ZD / 1ZE / 1ZH	2	**11.8171-0008.1**	**990049**	ATE
RS 1.8 T	132	08/02→01/06		+PR 1ZN	2	**11.8171-0008.1**	**990049**	ATE

© 2022 Continental Aftermarket & Services GmbH

	kW				! #			
SKODA - OCTAVIA I Combi (1U5) 07/98→12/10								
Brake Disc								
1.6 1.8 20V 1.9 SDI 1.9 TDI 2.0	55 - 74 92 50 66 - 81 85	07/98→12/07 07/98→07/00 07/98→12/03 07/98→03/10 04/99→05/07	➡	+PR 1KK / 1KS / 1KP		**24.0109-0123.1**	**409123**	Ø 230 Brake Disc Thickness [mm] 9 Minimum thickness [mm] 7 + S
1.6 1.8 T 1.9 TDI	75 110 74	09/00→12/10 07/98→12/10 08/00→12/10	➡	→ 06/10; +PR 1KK / 1KS / 1KP		**24.0109-0123.1**	**409123**	Ø 230 Brake Disc Thickness [mm] 9 Minimum thickness [mm] 7 + S
1.9 TDI	96	09/02→09/04	➡	01/03→; +PR 1KK / 1KS / 1KP		**24.0109-0123.1**	**409123**	Ø 230 Brake Disc Thickness [mm] 9 Minimum thickness [mm] 7 + S
Slave Cylinder, clutch								
1.4 16V	55	08/00→12/10		→ 06/10		**24.2519-1706.3**	**040096**	Ø 19
SKODA - OCTAVIA I Estate Van (1U5) 08/00→03/10								
Guide Bolt, brake caliper								
1.9 D 1.9 TDI	50 66	08/00→12/03 08/00→03/10		+PR 1LN / 1LE / 1ZD / 1ZE / 1ZH	2	**11.8171-0008.1**	**990049**	ATE
Brake Disc								
1.9 D 1.9 TDI	50 66	08/00→12/03 08/00→03/10	➡	+PR 1KK / 1KS / 1KP		**24.0109-0123.1**	**409123**	Ø 230 Brake Disc Thickness [mm] 9 Minimum thickness [mm] 7 + S
SKODA - OCTAVIA II (1Z3) 02/04→06/13								
Guide Bolt, brake caliper								
1.2 TSI 1.4 1.4 TSI 1.6 1.6 TDI 1.8 TSI 2.0 TDI	77 59 90 75 77 112 - 118 81	02/10→06/13 06/04→04/13 11/08→06/13 06/04→06/13 06/09→04/13 06/07→06/13 03/10→06/13		→ 01/13; +PR 1ZE	2	**11.8171-0008.1**	**990049**	ATE
1.4 1.6 FSI 2.0 TDI	55 85 100	05/04→05/06 02/04→10/08 02/04→05/10		06/04→; +PR 1ZE	2	**11.8171-0008.1**	**990049**	ATE
1.6 LPG	75	08/09→11/12		09/09→; +PR 1ZE	2	**11.8171-0008.1**	**990049**	ATE
1.6 MultiFuel	75	01/08→06/13		09/09→ 01/13; +PR 1ZE	2	**11.8171-0008.1**	**990049**	ATE
1.9 TDI 2.0 FSI 2.0 TDI	77 110 103	06/04→12/10 11/04→10/08 11/05→05/10		+PR 1ZE	2	**11.8171-0008.1**	**990049**	ATE
2.0 TDI 16V	103	02/04→04/13		06/04→ 01/13; +PR 1ZE	2	**11.8171-0008.1**	**990049**	ATE
2.0 TDI RS 2.0 TFSI	125 147	04/06→02/13 10/05→02/13		→ 01/13; +PR 1LL / 1LP / 1ZB	2	**11.8171-0008.1**	**990049**	ATE
Brake Disc								
1.2 TSI 1.4 1.4 TSI 1.6 1.6 TDI 1.8 TSI 2.0 TDI	77 59 90 75 77 112 - 118 81	02/10→06/13 06/04→04/13 11/08→06/13 06/04→06/13 06/09→04/13 06/07→06/13 03/10→06/13	⬅	→ 01/13; +PR 1ZE		**24.0125-0145.1**	**425145**	Ø 288 Brake Disc Thickness [mm] 25 Minimum thickness [mm] 22 Vented + S
			➡	→ 01/13; +PR 1KS / 1KT		**24.0110-0356.1**	**410356**	Ø 272 Brake Disc Thickness [mm] 9.7 Minimum thickness [mm] 8 + S
1.4 1.6 FSI 2.0 TDI	55 85 100	05/04→05/06 02/04→10/08 02/04→05/10	⬅	06/04→; +PR 1ZE		**24.0125-0145.1**	**425145**	Ø 288 Brake Disc Thickness [mm] 25 Minimum thickness [mm] 22 Vented + S
			➡	06/04→; +PR 1KS / 1KT		**24.0110-0356.1**	**410356**	Ø 272 Brake Disc Thickness [mm] 9.7 Minimum thickness [mm] 8 + S
1.6 LPG	75	08/09→11/12	⬅	09/09→; +PR 1ZE		**24.0125-0145.1**	**425145**	Ø 288 Brake Disc Thickness [mm] 25 Minimum thickness [mm] 22 Vented + S
			➡	09/09→; +PR 1KS / 1KT		**24.0110-0356.1**	**410356**	Ø 272 Brake Disc Thickness [mm] 9.7 Minimum thickness [mm] 8 + S
1.6 MultiFuel	75	01/08→06/13	⬅	09/09→; +PR 1ZE; → 01/13		**24.0125-0145.1**	**425145**	Ø 288 Brake Disc Thickness [mm] 25 Minimum thickness [mm] 22 Vented + S

	kW				! #			
SKODA - OCTAVIA II (1Z3) 02/04→06/13								
Brake Disc								
1.6 MultiFuel	75	01/08→06/13	➡	09/09→; +PR 1KS / 1KT; → 01/13		**24.0110-0356.1**	**410356**	Ø 272 Brake Disc Thickness [mm] 9.7 Minimum thickness [mm] 8 + S
1.9 TDI 2.0 FSI 2.0 TDI	77 110 103	06/04→12/10 11/04→10/08 11/05→05/10	⬅	+PR 1ZE		**24.0125-0145.1**	**425145**	Ø 288 Brake Disc Thickness [mm] 25 Minimum thickness [mm] 22 Vented + S
			➡	+PR 1KS / 1KT		**24.0110-0356.1**	**410356**	Ø 272 Brake Disc Thickness [mm] 9.7 Minimum thickness [mm] 8 + S
2.0 TDI 16V	103	02/04→04/13	⬅	06/04→ 01/13; +PR 1ZE		**24.0125-0145.1**	**425145**	Ø 288 Brake Disc Thickness [mm] 25 Minimum thickness [mm] 22 Vented + S
			➡	06/04→ 01/13; +PR 1KS / 1KT		**24.0110-0356.1**	**410356**	Ø 272 Brake Disc Thickness [mm] 9.7 Minimum thickness [mm] 8 + S
2.0 TDI RS 2.0 TFSI	125 147	04/06→02/13 10/05→02/13	⬅	→ 01/13; +PR 1LL / 1LP / 1ZB		**24.0125-0158.1** **24.0325-0158.1**	**425158** **525158**	Ø 312 Brake Disc Thickness [mm] 25 Minimum thickness [mm] 22 Vented + S Ø 312 Brake Disc Thickness [mm] 25 Minimum thickness [mm] 22 Vented + S
			➡	→ 01/13; +PR 1KS / 1KT		**24.0110-0356.1**	**410356**	Ø 272 Brake Disc Thickness [mm] 9.7 Minimum thickness [mm] 8 + S
Slave Cylinder, clutch								
1.2 TSI 1.4 1.4 TSI 1.6 1.6 TDI 1.8 TSI 2.0 TDI 2.0 TDI RS 2.0 TFSI	77 59 90 75 77 112 - 118 81 125 147	02/10→06/13 06/04→04/13 11/08→06/13 06/04→06/13 06/09→04/13 06/07→06/13 03/10→06/13 04/06→02/13 10/05→02/13		+PR 0G3 / 0EM; → 01/13		**24.2519-1706.3**	**040096**	Ø 19
1.4 1.6 FSI 2.0 TDI	55 85 100	05/04→05/06 02/04→10/08 02/04→05/10		06/04→; +PR 0G3 / 0EM		**24.2519-1706.3**	**040096**	Ø 19
1.6 LPG	75	08/09→11/12		09/09→; +PR 0G3 / 0EM		**24.2519-1706.3**	**040096**	Ø 19
1.6 MultiFuel	75	01/08→06/13		09/09→; +PR 0G3 / 0EM; → 01/13		**24.2519-1706.3**	**040096**	Ø 19
1.9 TDI 2.0 FSI 2.0 TDI	77 110 103	06/04→12/10 11/04→10/08 11/05→05/10		+PR 0G3 / 0EM		**24.2519-1706.3**	**040096**	Ø 19
2.0 TDI 16V	103	02/04→04/13		06/04→; +PR 0G3 / 0EM; → 01/13		**24.2519-1706.3**	**040096**	Ø 19
SKODA - OCTAVIA II Combi (1Z5) 02/04→06/13								
Guide Bolt, brake caliper								
1.2 TSI 1.4 1.4 TSI 1.6 1.6 TDI 1.6 TDI 4x4 1.8 TSI 1.8 TSI 4x4 2.0 TDI 2.0 TDI 16V 4x4 2.0 TDI 4x4	77 59 90 75 77 77 112 - 118 112 - 118 81 103 81	02/10→04/13 05/06→06/13 11/08→06/13 09/04→06/13 06/09→04/13 06/09→02/13 06/07→06/13 11/08→02/13 03/10→06/13 05/10→02/13 05/11→02/13		→ 01/13; +PR 1ZE	2	**11.8171-0008.1**	**990049**	ATE
1.4 1.6 FSI 2.0 TDI 16V	55 85 100	05/04→05/06 02/04→10/08 02/04→05/10		06/04→; +PR 1ZE	2	**11.8171-0008.1**	**990049**	ATE
1.6 LPG	75	08/09→11/12		09/09→; +PR 1ZE	2	**11.8171-0008.1**	**990049**	ATE
1.6 MultiFuel	75	01/08→06/13		09/09→ 01/13; +PR 1ZE	2	**11.8171-0008.1**	**990049**	ATE
1.9 TDI 1.9 TDI 4x4 2.0 FSI 2.0 FSI 4x4 2.0 TDI 2.0 TDI 4x4	77 77 110 110 103 103	09/04→12/10 11/04→12/10 11/04→10/08 11/04→04/09 11/05→05/10 07/06→05/10		+PR 1ZE	2	**11.8171-0008.1**	**990049**	ATE
2.0 TDI 16V	103	02/04→05/13		06/04→ 01/13; +PR 1ZE	2	**11.8171-0008.1**	**990049**	ATE

© 2022 Continental Aftermarket & Services GmbH

SKODA - OCTAVIA II Combi (1Z5) 02/04→06/13

	kW				! #			
Guide Bolt, brake caliper								
2.0 TDI RS 2.0 TFSI	125 147	04/06→02/13 10/05→02/13		→ 01/13; +PR 1LL / 1LP / 1ZB	2	**11.8171-0008.1**	**990049**	ATE
Brake Disc								
1.2 TSI 1.4 1.4 TSI 1.6 1.6 TDI 1.6 TDI 4x4 1.8 TSI 1.8 TSI 4x4 2.0 TDI 2.0 TDI 16V 4x4 2.0 TDI 4x4	77 59 90 75 77 77 112 - 118 112 - 118 81 103 81	02/10→04/13 05/06→06/13 11/08→06/13 09/04→06/13 06/09→04/13 06/09→02/13 06/07→06/13 11/08→02/13 03/10→06/13 05/10→02/13 05/11→02/13	←	+PR 1ZE; → 01/13		**24.0125-0145.1**	**425145**	Ø 288 Brake Disc Thickness [mm] 25 Minimum thickness [mm] 22 Vented + S
			→	+PR 1KS / 1KT; → 01/13		**24.0110-0356.1**	**410356**	Ø 272 Brake Disc Thickness [mm] 9.7 Minimum thickness [mm] 8 + S
1.4 1.6 FSI 2.0 TDI 16V	55 85 100	05/04→05/06 02/04→10/08 02/04→05/10	←	06/04→; +PR 1ZE		**24.0125-0145.1**	**425145**	Ø 288 Brake Disc Thickness [mm] 25 Minimum thickness [mm] 22 Vented + S
			→	06/04→; +PR 1KS / 1KT		**24.0110-0356.1**	**410356**	Ø 272 Brake Disc Thickness [mm] 9.7 Minimum thickness [mm] 8 + S
1.6 LPG	75	08/09→11/12	←	09/09→; +PR 1ZE		**24.0125-0145.1**	**425145**	Ø 288 Brake Disc Thickness [mm] 25 Minimum thickness [mm] 22 Vented + S
			→	09/09→; +PR 1KS / 1KT		**24.0110-0356.1**	**410356**	Ø 272 Brake Disc Thickness [mm] 9.7 Minimum thickness [mm] 8 + S
1.6 MultiFuel	75	01/08→06/13	←	09/09→; +PR 1ZE; → 01/13		**24.0125-0145.1**	**425145**	Ø 288 Brake Disc Thickness [mm] 25 Minimum thickness [mm] 22 Vented + S
			→	09/09→; +PR 1KS / 1KT; → 01/13		**24.0110-0356.1**	**410356**	Ø 272 Brake Disc Thickness [mm] 9.7 Minimum thickness [mm] 8 + S
1.9 TDI 1.9 TDI 4x4 2.0 FSI 2.0 FSI 4x4 2.0 TDI 2.0 TDI 4x4	77 77 110 110 103 103	09/04→12/10 11/04→12/10 11/04→10/08 11/04→04/09 11/05→05/10 07/06→05/10	←	+PR 1ZE		**24.0125-0145.1**	**425145**	Ø 288 Brake Disc Thickness [mm] 25 Minimum thickness [mm] 22 Vented + S
			→	+PR 1KS / 1KT		**24.0110-0356.1**	**410356**	Ø 272 Brake Disc Thickness [mm] 9.7 Minimum thickness [mm] 8 + S
2.0 TDI 16V	103	02/04→05/13	←	06/04→ 01/13; +PR 1ZE		**24.0125-0145.1**	**425145**	Ø 288 Brake Disc Thickness [mm] 25 Minimum thickness [mm] 22 Vented + S
			→	06/04→ 01/13; +PR 1KS / 1KT		**24.0110-0356.1**	**410356**	Ø 272 Brake Disc Thickness [mm] 9.7 Minimum thickness [mm] 8 + S
2.0 TDI RS 2.0 TFSI	125 147	04/06→02/13 10/05→02/13	←	→ 01/13; +PR 1LL / 1LP / 1ZB		**24.0125-0158.1** **24.0325-0158.1**	**425158** **525158**	Ø 312 Brake Disc Thickness [mm] 25 Minimum thickness [mm] 22 Vented + S Ø 312 Brake Disc Thickness [mm] 25 Minimum thickness [mm] 22 Vented + S
			→	+PR 1KS / 1KT; → 01/13		**24.0110-0356.1**	**410356**	Ø 272 Brake Disc Thickness [mm] 9.7 Minimum thickness [mm] 8 + S
Slave Cylinder, clutch								
1.2 TSI 1.4 1.4 TSI 1.6 1.6 TDI 1.6 TDI 4x4 1.8 TSI 1.8 TSI 4x4 2.0 TDI 2.0 TDI 16V 4x4 2.0 TDI 4x4 2.0 TDI RS	77 59 90 75 77 77 112 - 118 112 - 118 81 103 81 125	02/10→04/13 05/06→06/13 11/08→06/13 09/04→06/13 06/09→04/13 06/09→02/13 06/07→06/13 11/08→02/13 03/10→06/13 05/10→02/13 05/11→02/13 04/06→02/13		+PR 0G3 / 0EM; → 01/13		**24.2519-1706.3**	**040096**	Ø 19

	kW				! #			
SKODA - OCTAVIA II Combi (1Z5) 02/04→06/13								
Slave Cylinder, clutch								
2.0 TFSI	147	10/05→02/13		+PR 0G3 / 0EM; → 01/13		**24.2519-1706.3**	**040096**	Ø 19
1.4 1.6 FSI 2.0 TDI 16V	55 85 100	05/04→05/06 02/04→10/08 02/04→05/10		06/04→; +PR 0G3 / 0EM		**24.2519-1706.3**	**040096**	Ø 19
1.6 LPG	75	08/09→11/12		09/09→; +PR 0G3 / 0EM		**24.2519-1706.3**	**040096**	Ø 19
1.6 MultiFuel	75	01/08→06/13		09/09→; +PR 0G3 / 0EM; → 01/13		**24.2519-1706.3**	**040096**	Ø 19
1.9 TDI 1.9 TDI 4x4 2.0 FSI 2.0 FSI 4x4 2.0 TDI 2.0 TDI 4x4	77 77 110 110 103 103	09/04→12/10 11/04→12/10 11/04→10/08 11/04→04/09 11/05→05/10 07/06→05/10		+PR 0G3 / 0EM		**24.2519-1706.3**	**040096**	Ø 19
2.0 TDI 16V	103	02/04→05/13		06/04→; +PR 0G3 / 0EM; → 01/13		**24.2519-1706.3**	**040096**	Ø 19
SKODA - OCTAVIA III (5E3, NL3, NR3) 11/12→								
Brake Master Cylinder								
1.0 TSI 1.2 TSI 1.4 TSI 1.4 TSI G-TEC 1.5 TSI 1.6 1.6 TDI 1.6 TDI 4x4 1.8 TSI 1.8 TSI 4x4 2.0 TDI 2.0 TDI / TDI RS 4x4 2.0 TDI 4x4 2.0 TDI RS 2.0 TSI 2.0 TSI 4x4 2.0 TSI RS	85 81 103 81 110 81 81 - 85 77 - 85 132 132 105 135 110 135 140 140 162 - 180	05/16→ 05/15→02/17 11/12→ 11/13→ 02/17→ 01/14→ 05/13→ 09/14→ 11/12→ 09/14→ 11/12→ 05/13→ 09/14→ 05/13→ 02/17→ 02/19→ 05/13→		for left-hand drive vehicles; +PR 1ZA / 1ZB / 1ZE / 1ZF		**24.4123-1719.3**	**011017**	TRW Ø 23.8 without brake fluid reservoir
1.2 TSI 1.6 TDI 2.0 TDI	63 - 77 66 - 77 110	11/12→ 11/12→ 11/12→		02/13→; for left-hand drive vehicles; +PR 1ZA / 1ZB / 1ZE / 1ZF		**24.4123-1719.3**	**011017**	TRW Ø 23.8 without brake fluid reservoir
1.4 TSI	110	08/14→10/20		05/15→; for left-hand drive vehicles; +PR 1ZA / 1ZB / 1ZE / 1ZF		**24.4123-1719.3**	**011017**	TRW Ø 23.8 without brake fluid reservoir
Brake Caliper								
1.0 TSI 1.2 TSI 1.4 TSI 1.4 TSI G-TEC 1.5 TSI 1.6 1.6 TDI 1.6 TDI 4x4 1.8 TSI 1.8 TSI 4x4 2.0 TDI 2.0 TDI 4x4 2.0 TDI RS 2.0 TSI 2.0 TSI 4x4 2.0 TSI RS	85 81 103 81 110 81 81 - 85 77 - 85 132 132 105 110 135 140 140 162 - 180	05/16→ 05/15→02/17 11/12→ 11/13→ 02/17→ 01/14→ 05/13→ 09/14→ 11/12→ 09/14→ 11/12→ 09/14→ 05/13→ 02/17→ 02/19→ 05/13→	←	+PR 1ZK; ⊞		**24.3571-1801.5**	**241387**	without holder
			←	+PR 1ZK; ⊟		**24.3571-1802.5**	**241388**	without holder
1.2 TSI 1.6 TDI 2.0 TDI	63 - 77 66 - 77 110	11/12→ 11/12→ 11/12→	←	02/13→; +PR 1ZK; ⊞		**24.3571-1801.5**	**241387**	without holder
			←	02/13→; +PR 1ZK; ⊟		**24.3571-1802.5**	**241388**	without holder
1.4 TSI	110	08/14→10/20	←	05/15→; +PR 1ZK; ⊞		**24.3571-1801.5**	**241387**	without holder
			←	05/15→; +PR 1ZK; ⊟		**24.3571-1802.5**	**241388**	without holder
2.0 TDI / TDI RS 4x4	135	05/13→	←	09/14→; +PR 1ZK; ⊞		**24.3571-1801.5**	**241387**	without holder
			←	09/14→; +PR 1ZK; ⊟		**24.3571-1802.5**	**241388**	without holder
Brake Pad Set, disc brake								
1.0 TSI 1.2 TSI	85 81	05/16→ 05/15→02/17	←	+PR 1LG		**13.0460-2617.2** **13.0470-2617.2**	**602617** **LD2617**	TRW + WK TRW + WK Ceramic

© 2022 Continental Aftermarket & Services GmbH

SKODA - OCTAVIA III (5E3, NL3, NR3) 11/12→

Brake Pad Set, disc brake

	kW				! #			
1.4 TSI	103	11/12→	←	+PR 1ZK / 1ZJ / 1ZU		**13.0460-2785.2**	**602785**	TRW 25683 20,4 + WE / + WK
1.4 TSI G-TEC	81	11/13→				**13.0470-2785.2**	**LD2785**	TRW 25683 20,4 + WE / + WK Ceramic
1.5 TSI	110	02/17→						
1.6	81	01/14→						
1.6 TDI	81 - 85	05/13→						
1.6 TDI 4x4	77 - 85	09/14→						
1.8 TSI	132	11/12→						
1.8 TSI 4x4	132	09/14→						
2.0 TDI	105	11/12→						
2.0 TDI / TDI RS 4x4	135	05/13→						
2.0 TDI 4x4	110	09/14→						
2.0 TDI RS	135	05/13→						
2.0 TSI	140	02/17→						
2.0 TSI 4x4	140	02/19→						
2.0 TSI RS	162 - 180	05/13→						
1.2 TSI	63 - 77	11/12→	←	02/13→; +PR 1LG		**13.0460-2617.2**	**602617**	TRW + WK
						13.0470-2617.2	**LD2617**	TRW + WK Ceramic
1.6 TDI	66 - 77	11/12→	←	02/13→; +PR 1ZK / 1ZJ / 1ZU		**13.0460-2785.2**	**602785**	TRW 25683 20,4 + WE / + WK
2.0 TDI	110	11/12→				**13.0470-2785.2**	**LD2785**	TRW 25683 20,4 + WE / + WK Ceramic
1.4 TSI	110	08/14→10/20	←	05/15→; +PR 1LG		**13.0460-2617.2**	**602617**	TRW + WK
						13.0470-2617.2	**LD2617**	TRW + WK Ceramic
			←	05/15→; +PR 1ZK / 1ZJ / 1ZU		**13.0460-2785.2**	**602785**	TRW 25683 20,4 + WE / + WK
						13.0470-2785.2	**LD2785**	TRW 25683 20,4 + WE / + WK Ceramic

Warning Contact, brake pad wear

1.0 TSI	85	05/16→	←	+PR 1ZA / 1ZB / 1ZE / 1ZJ / 1ZK / 1ZU / 1LG	1	**24.8190-0065.2**	**620065**	
1.2 TSI	63 - 81	11/12→						
1.4 TSI	103 - 110	11/12→						
1.4 TSI G-TEC	81	11/13→						
1.5 TSI	110	02/17→						
1.6	81	01/14→						
1.6 TDI	66 - 85	11/12→						
1.6 TDI 4x4	77 - 85	09/14→						
1.8 TSI	132	11/12→						
1.8 TSI 4x4	132	09/14→						
2.0 TDI	105 - 110	11/12→						
2.0 TDI / TDI RS 4x4	135	05/13→						
2.0 TDI 4x4	110	09/14→						
2.0 TDI RS	135	05/13→						
2.0 TSI	140	02/17→						
2.0 TSI 4x4	140	02/19→						
2.0 TSI RS	162 - 180	05/13→						

Brake Disc

1.0 TSI	85	05/16→	←	+PR 1ZJ		**24.0125-0145.1**	**425145**	Ø 288 Brake Disc Thickness [mm] 25 Minimum thickness [mm] 22 Vented + S
1.2 TSI	81	05/15→02/17						
1.4 TSI	103	11/12→						
1.4 TSI G-TEC	81	11/13→						
1.5 TSI	110	02/17→						
1.6 TDI	81 - 85	05/13→	←	+PR 1ZK / 1ZU		**24.0125-0158.1**	**425158**	Ø 312 Brake Disc Thickness [mm] 25 Minimum thickness [mm] 22 Vented + S
1.6 TDI 4x4	77 - 85	09/14→						
1.8 TSI	132	11/12→				**24.0325-0158.1**	**525158**	Ø 312 Brake Disc Thickness [mm] 25 Minimum thickness [mm] 22 Vented + S
1.8 TSI 4x4	132	09/14→						
2.0 TDI / TDI RS 4x4	135	05/13→						
2.0 TDI 4x4	110	09/14→						
2.0 TDI RS	135	05/13→	←	+PR 1LG		**24.0130-0225.1**	**430225**	Ø 340 Brake Disc Thickness [mm] 30 Minimum thickness [mm] 27 Vented + S
2.0 TSI	140	02/17→						
2.0 TSI 4x4	140	02/19→						
2.0 TSI RS	162 - 180	05/13→						
			→	+PR 1KS / 1KT		**24.0110-0356.1**	**410356**	Ø 272 Brake Disc Thickness [mm] 9.7 Minimum thickness [mm] 8 + S
			→	+PR 1KW		**24.0122-0219.1**	**422219**	Ø 310 Brake Disc Thickness [mm] 22 Minimum thickness [mm] 20 Vented

SKODA - OCTAVIA III (5E3, NL3, NR3) 11/12→

Brake Disc

	kW				! #			
1.2 TSI	63 - 77	11/12→	←	02/13→; +PR 1ZJ		**24.0125-0145.1**	**425145**	Ø 288 Brake Disc Thickness [mm] 25 Minimum thickness [mm] 22 Vented + S
1.6 TDI	66 - 77	11/12→						
2.0 TDI	110	11/12→	←	02/13→; +PR 1ZK / 1ZU		**24.0125-0158.1**	**425158**	Ø 312 Brake Disc Thickness [mm] 25 Minimum thickness [mm] 22 Vented + S
						24.0325-0158.1	**525158**	Ø 312 Brake Disc Thickness [mm] 25 Minimum thickness [mm] 22 Vented + S
			←	02/13→; +PR 1LG		**24.0130-0225.1**	**430225**	Ø 340 Brake Disc Thickness [mm] 30 Minimum thickness [mm] 27 Vented + S
			→	02/13→; +PR 1KS / 1KT		**24.0110-0356.1**	**410356**	Ø 272 Brake Disc Thickness [mm] 9.7 Minimum thickness [mm] 8 + S
			→	02/13→; +PR 1KW		**24.0122-0219.1**	**422219**	Ø 310 Brake Disc Thickness [mm] 22 Minimum thickness [mm] 20 Vented
1.4 TSI	110	08/14→10/20	←	05/15→; +PR 1ZJ		**24.0125-0145.1**	**425145**	Ø 288 Brake Disc Thickness [mm] 25 Minimum thickness [mm] 22 Vented + S
			←	05/15→; +PR 1ZK / 1ZU		**24.0125-0158.1**	**425158**	Ø 312 Brake Disc Thickness [mm] 25 Minimum thickness [mm] 22 Vented + S
						24.0325-0158.1	**525158**	Ø 312 Brake Disc Thickness [mm] 25 Minimum thickness [mm] 22 Vented + S
			←	05/15→; +PR 1LG		**24.0130-0225.1**	**430225**	Ø 340 Brake Disc Thickness [mm] 30 Minimum thickness [mm] 27 Vented + S
			→	05/15→; +PR 1KS / 1KT		**24.0110-0356.1**	**410356**	Ø 272 Brake Disc Thickness [mm] 9.7 Minimum thickness [mm] 8 + S
			→	05/15→; +PR 1KW		**24.0122-0219.1**	**422219**	Ø 310 Brake Disc Thickness [mm] 22 Minimum thickness [mm] 20 Vented
1.6	81	01/14→	←	+PR 1ZJ		**24.0125-0145.1**	**425145**	Ø 288 Brake Disc Thickness [mm] 25 Minimum thickness [mm] 22 Vented + S
2.0 TDI	105	11/12→						
			←	+PR 1ZK / 1ZU		**24.0125-0158.1**	**425158**	Ø 312 Brake Disc Thickness [mm] 25 Minimum thickness [mm] 22 Vented + S
			←	+PR 1LG		**24.0130-0225.1**	**430225**	Ø 340 Brake Disc Thickness [mm] 30 Minimum thickness [mm] 27 Vented + S
			→	+PR 1KS / 1KT		**24.0110-0356.1**	**410356**	Ø 272 Brake Disc Thickness [mm] 9.7 Minimum thickness [mm] 8 + S
			→	+PR 1KW		**24.0122-0219.1**	**422219**	Ø 310 Brake Disc Thickness [mm] 22 Minimum thickness [mm] 20 Vented

Sensor, wheel speed

1.0 TSI	85	05/16→	←			**24.0711-5273.3**	**360303**	
1.2 TSI	81	05/15→02/17	←			**24.0711-5274.3**	**360304**	
1.4 TSI	103	11/12→	→	for vehicles with parking assistant system	2	**24.0711-6337.3**	**360390**	
1.4 TSI G-TEC	81	11/13→	→	for cruise control system	2	**24.0711-6337.3**	**360390**	
1.6	81	01/14→	→	02/17→; +PR 0N4	2	**24.0711-6337.3**	**360390**	
1.6 TDI	81	05/13→						
1.8 TSI	132	11/12→						
2.0 TDI	105	11/12→						
2.0 TDI RS	135	05/13→						

© 2022 Continental Aftermarket & Services GmbH

	kW				! #			
SKODA - OCTAVIA III (5E3, NL3, NR3) 11/12→								
Sensor, wheel speed								
2.0 TSI RS	162 - 169	05/13→	←			**24.0711-5273.3**	**360303**	
			←			**24.0711-5274.3**	**360304**	
			→	for vehicles with parking assistant system	2	**24.0711-6337.3**	**360390**	
			→	for cruise control system	2	**24.0711-6337.3**	**360390**	
			→	02/17→; +PR 0N4	2	**24.0711-6337.3**	**360390**	
1.2 TSI	63 - 77	11/12→	←	02/13→;		**24.0711-5273.3**	**360303**	
1.6 TDI	66 - 77	11/12→	←	02/13→;		**24.0711-5274.3**	**360304**	
2.0 TDI	110	11/12→	→	02/13→; for cruise control system	2	**24.0711-6337.3**	**360390**	
			→	02/13→; for vehicles with parking assistant system	2	**24.0711-6337.3**	**360390**	
			→	02/17→; +PR 0N4	2	**24.0711-6337.3**	**360390**	
1.4 TSI	110	08/14→10/20	←	05/15→;		**24.0711-5273.3**	**360303**	
			←	05/15→;		**24.0711-5274.3**	**360304**	
			→	05/15→; for cruise control system	2	**24.0711-6337.3**	**360390**	
			→	05/15→; for vehicles with parking assistant system	2	**24.0711-6337.3**	**360390**	
			→	02/17→; +PR 0N4	2	**24.0711-6337.3**	**360390**	
1.5 TSI	110	02/17→	←			**24.0711-5273.3**	**360303**	
1.6 TDI 4x4	85	02/17→	←			**24.0711-5274.3**	**360304**	
			→	for vehicles with parking assistant system	2	**24.0711-6337.3**	**360390**	
			→	for cruise control system	2	**24.0711-6337.3**	**360390**	
			→	+PR 0N4	2	**24.0711-6337.3**	**360390**	
1.6 TDI	85	02/17→	←			**24.0711-5273.3**	**360303**	
2.0 TSI	140	02/17→	←			**24.0711-5274.3**	**360304**	
2.0 TSI RS	180	02/17→	→	+PR 0N4	2	**24.0711-6337.3**	**360390**	
1.6 TDI 4x4	77 - 81	09/14→	←			**24.0711-5273.3**	**360303**	
1.8 TSI 4x4	132	09/14→	←			**24.0711-5274.3**	**360304**	
2.0 TDI / TDI RS 4x4	135	05/13→	→	02/17→;		**24.0711-5401.3**	**360330**	
2.0 TDI 4x4	110	09/14→	→	02/17→;		**24.0711-5402.3**	**360331**	
			→	for cruise control system	2	**24.0711-6337.3**	**360390**	
			→	for vehicles with parking assistant system	2	**24.0711-6337.3**	**360390**	
2.0 TSI 4x4	140	02/19→	←			**24.0711-5273.3**	**360303**	
			←			**24.0711-5274.3**	**360304**	
			→			**24.0711-5401.3**	**360330**	
			→			**24.0711-5402.3**	**360331**	
Slave Cylinder, clutch								
1.0 TSI	85	05/16→		+PR 0EC / 0EM		**24.2519-1706.3**	**040096**	Ø 19
1.2 TSI	81	05/15→02/17						
1.4 TSI	103	11/12→						
1.4 TSI G-TEC	81	11/13→						
1.5 TSI	110	02/17→						
1.6	81	01/14→						
1.6 TDI	81 - 85	05/13→						
1.6 TDI 4x4	77 - 85	09/14→						
1.8 TSI	132	11/12→						
1.8 TSI 4x4	132	09/14→						
2.0 TDI	105	11/12→						
2.0 TDI / TDI RS 4x4	135	05/13→						
2.0 TDI 4x4	110	09/14→						
2.0 TDI RS	135	05/13→						
2.0 TSI	140	02/17→						
2.0 TSI 4x4	140	02/19→						
2.0 TSI RS	162 - 180	05/13→						
1.2 TSI	63 - 77	11/12→		02/13→; +PR 0EC / 0EM		**24.2519-1706.3**	**040096**	Ø 19
1.6 TDI	66 - 77	11/12→						
2.0 TDI	110	11/12→						
1.4 TSI	110	08/14→10/20		05/15→; +PR 0EC / 0EM		**24.2519-1706.3**	**040096**	Ø 19

SKODA - OCTAVIA III Combi (5E5, 5E6) 11/12→

Brake Master Cylinder

	kW				! #			
1.0 TSI 1.2 TSI 1.4 TSI 1.4 TSI G-TEC 1.5 TSI 1.5 TSI G-TEC 1.6 1.6 TDI 1.6 TDI 4x4 1.8 TSI 1.8 TSI 4x4 2.0 TDI 2.0 TDI / TDI RS 4x4 2.0 TDI 4x4 2.0 TDI RS 2.0 TSI 2.0 TSI 4x4 2.0 TSI RS	85 81 103 81 110 96 81 81 - 85 77 - 85 132 132 105 135 110 135 140 140 169 - 180	05/16→ 05/15→02/17 11/12→ 11/13→ 02/17→ 01/19→ 01/14→ 05/13→ 11/12→ 11/12→ 11/12→ 11/12→ 09/14→ 11/12→ 05/13→ 02/17→ 02/19→ 05/15→		for left-hand drive vehicles; +PR 1ZA / 1ZB / 1ZE / 1ZF		**24.4123-1719.3**	**011017**	TRW Ø 23.8 without brake fluid reservoir
1.2 TSI 1.6 TDI 2.0 TDI	63 - 77 66 - 77 110	11/12→ 11/12→ 11/12→		02/13→; for left-hand drive vehicles; +PR 1ZA / 1ZB / 1ZE / 1ZF		**24.4123-1719.3**	**011017**	TRW Ø 23.8 without brake fluid reservoir
1.4 TSI	110	08/14→10/20		05/15→; for left-hand drive vehicles; +PR 1ZA / 1ZB / 1ZE / 1ZF		**24.4123-1719.3**	**011017**	TRW Ø 23.8 without brake fluid reservoir
2.0 TSI RS	162	11/12→		05/13→; +PR 1ZA / 1ZB / 1ZE / 1ZF; for left-hand drive vehicles		**24.4123-1719.3**	**011017**	TRW Ø 23.8 without brake fluid reservoir

Brake Caliper

1.0 TSI 1.2 TSI	85 81	05/16→ 05/15→02/17	←	+PR 1ZK; ⊞		**24.3571-1801.5**	**241387**	without holder
1.4 TSI 1.4 TSI G-TEC 1.5 TSI 1.5 TSI G-TEC 1.6 1.6 TDI 1.6 TDI 4x4 1.8 TSI 1.8 TSI 4x4 2.0 TDI 2.0 TDI / TDI RS 4x4 2.0 TDI 4x4 2.0 TDI RS 2.0 TSI 2.0 TSI 4x4 2.0 TSI RS	103 81 110 96 81 81 - 85 77 - 85 132 132 105 135 110 135 140 140 169 - 180	11/12→ 11/13→ 02/17→ 01/19→ 01/14→ 05/13→ 11/12→ 11/12→ 11/12→ 11/12→ 09/14→ 11/12→ 05/13→ 02/17→ 02/19→ 05/15→	←	+PR 1ZK; ⊟		**24.3571-1802.5**	**241388**	without holder
1.2 TSI 1.6 TDI 2.0 TDI	63 - 77 66 - 77 110	11/12→ 11/12→ 11/12→	←	02/13→; +PR 1ZK; ⊞		**24.3571-1801.5**	**241387**	without holder
			←	02/13→; +PR 1ZK; ⊟		**24.3571-1802.5**	**241388**	without holder
1.4 TSI	110	08/14→10/20	←	05/15→; +PR 1ZK; ⊞		**24.3571-1801.5**	**241387**	without holder
			←	05/15→; +PR 1ZK; ⊟		**24.3571-1802.5**	**241388**	without holder
2.0 TSI RS	162	11/12→	←	05/13→; +PR 1ZK; ⊞		**24.3571-1801.5**	**241387**	without holder
			←	05/13→; +PR 1ZK; ⊟		**24.3571-1802.5**	**241388**	without holder

Brake Pad Set, disc brake

1.0 TSI 1.2 TSI 1.4 TSI	85 81 103	05/16→ 05/15→02/17 11/12→	←	+PR 1LG		**13.0460-2617.2** **13.0470-2617.2**	**602617** **LD2617**	TRW + WK TRW + WK Ceramic
1.4 TSI G-TEC 1.5 TSI 1.5 TSI G-TEC 1.6 1.6 TDI 1.6 TDI 4x4 1.8 TSI 1.8 TSI 4x4 2.0 TDI 2.0 TDI / TDI RS 4x4 2.0 TDI 4x4	81 110 96 81 81 - 85 77 - 85 132 132 105 135 110	11/13→ 02/17→ 01/19→ 01/14→ 05/13→ 11/12→ 11/12→ 11/12→ 11/12→ 09/14→ 11/12→	←	+PR 1ZK / 1ZJ / 1ZU		**13.0460-2785.2** **13.0470-2785.2**	**602785** **LD2785**	TRW 25683 20,4 + WE / + WK TRW 25683 20,4 + WE / + WK Ceramic

© 2022 Continental Aftermarket & Services GmbH

SKODA - OCTAVIA III Combi (5E5, 5E6) 11/12→

Brake Pad Set, disc brake

	kW				! #			
2.0 TDI RS 2.0 TSI 2.0 TSI 4x4 2.0 TSI RS	135 140 140 169 - 180	05/13→ 02/17→ 02/19→ 05/15→	←	+PR 1LG		**13.0460-2617.2** **13.0470-2617.2**	**602617** **LD2617**	TRW + WK TRW + WK Ceramic
			←	+PR 1ZK / 1ZJ / 1ZU		**13.0460-2785.2** **13.0470-2785.2**	**602785** **LD2785**	TRW 25683 20,4 + WE / + WK TRW 25683 20,4 + WE / + WK Ceramic
1.2 TSI 1.6 TDI 2.0 TDI	63 - 77 66 - 77 110	11/12→ 11/12→ 11/12→	←	02/13→; +PR 1LG		**13.0460-2617.2** **13.0470-2617.2**	**602617** **LD2617**	TRW + WK TRW + WK Ceramic
			←	02/13→; +PR 1ZK / 1ZJ / 1ZU		**13.0460-2785.2** **13.0470-2785.2**	**602785** **LD2785**	TRW 25683 20,4 + WE / + WK TRW 25683 20,4 + WE / + WK Ceramic
1.4 TSI	110	08/14→10/20	←	05/15→; +PR 1LG		**13.0460-2617.2** **13.0470-2617.2**	**602617** **LD2617**	TRW + WK TRW + WK Ceramic
			←	05/15→; +PR 1ZK / 1ZJ / 1ZU		**13.0460-2785.2** **13.0470-2785.2**	**602785** **LD2785**	TRW 25683 20,4 + WE / + WK TRW 25683 20,4 + WE / + WK Ceramic
2.0 TSI RS	162	11/12→	←	+PR 1LG		**13.0460-2617.2**	**602617**	TRW + WK
			←	05/13→; +PR 1ZK / 1ZJ / 1ZU		**13.0460-2785.2** **13.0470-2785.2**	**602785** **LD2785**	TRW 25683 20,4 + WE / + WK TRW 25683 20,4 + WE / + WK Ceramic
			←	05/13→; +PR 1LG		**13.0470-2617.2**	**LD2617**	TRW + WK Ceramic

Warning Contact, brake pad wear

1.0 TSI 1.2 TSI 1.4 TSI 1.4 TSI G-TEC 1.5 TSI 1.5 TSI G-TEC 1.6 1.6 TDI 1.6 TDI 4x4 1.8 TSI 1.8 TSI 4x4 2.0 TDI 2.0 TDI / TDI RS 4x4 2.0 TDI 4x4 2.0 TDI RS 2.0 TSI 2.0 TSI 4x4 2.0 TSI RS	85 63 - 81 103 - 110 81 110 96 81 66 - 85 77 - 85 132 132 105 - 110 135 110 135 140 140 162 - 180	05/16→ 11/12→ 11/12→ 11/13→ 02/17→ 01/19→ 01/14→ 11/12→ 11/12→ 11/12→ 11/12→ 11/12→ 09/14→ 11/12→ 05/13→ 02/17→ 02/19→ 11/12→	←	+PR 1ZA / 1ZB / 1ZE / 1ZJ / 1ZK / 1ZU / 1LG	1	**24.8190-0065.2**	**620065**	

Brake Disc

1.0 TSI 1.2 TSI 1.4 TSI 1.4 TSI G-TEC 1.5 TSI 1.5 TSI G-TEC 1.6 TDI 1.6 TDI 4x4 1.8 TSI 1.8 TSI 4x4 2.0 TDI / TDI RS 4x4 2.0 TDI 4x4 2.0 TDI RS 2.0 TSI 2.0 TSI 4x4 2.0 TSI RS	85 81 103 81 110 96 81 - 85 77 - 85 132 132 135 110 135 140 140 169 - 180	05/16→ 05/15→02/17 11/12→ 11/13→ 02/17→ 01/19→ 05/13→ 11/12→ 11/12→ 11/12→ 09/14→ 11/12→ 05/13→ 02/17→ 02/19→ 05/15→	←	+PR 1ZJ		**24.0125-0145.1**	**425145**	Ø 288 Brake Disc Thickness [mm] 25 Minimum thickness [mm] 22 Vented + S
			←	+PR 1ZK / 1ZU		**24.0125-0158.1** **24.0325-0158.1**	**425158** **525158**	Ø 312 Brake Disc Thickness [mm] 25 Minimum thickness [mm] 22 Vented + S Ø 312 Brake Disc Thickness [mm] 25 Minimum thickness [mm] 22 Vented + S
			←	+PR 1LG		**24.0130-0225.1**	**430225**	Ø 340 Brake Disc Thickness [mm] 30 Minimum thickness [mm] 27 Vented + S
			→	+PR 1KS / 1KT		**24.0110-0356.1**	**410356**	Ø 272 Brake Disc Thickness [mm] 9.7 Minimum thickness [mm] 8 + S
			→	+PR 1KW		**24.0122-0219.1**	**422219**	Ø 310 Brake Disc Thickness [mm] 22 Minimum thickness [mm] 20 Vented
1.2 TSI 1.6 TDI	63 - 77 66 - 77	11/12→ 11/12→	←	02/13→; +PR 1ZJ		**24.0125-0145.1**	**425145**	Ø 288 Brake Disc Thickness [mm] 25 Minimum thickness [mm] 22 Vented + S

SKODA - OCTAVIA III Combi (5E5, 5E6) 11/12→

Brake Disc

	kW				! #			
2.0 TDI	110	11/12→	←	02/13→; +PR 1ZK / 1ZU		**24.0125-0158.1**	**425158**	Ø 312 Brake Disc Thickness [mm] 25 Minimum thickness [mm] 22 Vented + S
						24.0325-0158.1	**525158**	Ø 312 Brake Disc Thickness [mm] 25 Minimum thickness [mm] 22 Vented + S
			←	02/13→; +PR 1LG		**24.0130-0225.1**	**430225**	Ø 340 Brake Disc Thickness [mm] 30 Minimum thickness [mm] 27 Vented + S
			→	02/13→; +PR 1KS / 1KT		**24.0110-0356.1**	**410356**	Ø 272 Brake Disc Thickness [mm] 9.7 Minimum thickness [mm] 8 + S
			→	02/13→; +PR 1KW		**24.0122-0219.1**	**422219**	Ø 310 Brake Disc Thickness [mm] 22 Minimum thickness [mm] 20 Vented
1.4 TSI	110	08/14→10/20	←	05/15→; +PR 1ZJ		**24.0125-0145.1**	**425145**	Ø 288 Brake Disc Thickness [mm] 25 Minimum thickness [mm] 22 Vented + S
			←	05/15→; +PR 1ZK / 1ZU		**24.0125-0158.1**	**425158**	Ø 312 Brake Disc Thickness [mm] 25 Minimum thickness [mm] 22 Vented + S
						24.0325-0158.1	**525158**	Ø 312 Brake Disc Thickness [mm] 25 Minimum thickness [mm] 22 Vented + S
			←	05/15→; +PR 1LG		**24.0130-0225.1**	**430225**	Ø 340 Brake Disc Thickness [mm] 30 Minimum thickness [mm] 27 Vented + S
			→	05/15→; +PR 1KS / 1KT		**24.0110-0356.1**	**410356**	Ø 272 Brake Disc Thickness [mm] 9.7 Minimum thickness [mm] 8 + S
			→	05/15→; +PR 1KW		**24.0122-0219.1**	**422219**	Ø 310 Brake Disc Thickness [mm] 22 Minimum thickness [mm] 20 Vented
1.6 2.0 TDI	81 105	01/14→ 11/12→	←	+PR 1ZJ		**24.0125-0145.1**	**425145**	Ø 288 Brake Disc Thickness [mm] 25 Minimum thickness [mm] 22 Vented + S
			←	+PR 1ZK / 1ZU		**24.0125-0158.1**	**425158**	Ø 312 Brake Disc Thickness [mm] 25 Minimum thickness [mm] 22 Vented + S
			←	+PR 1LG		**24.0130-0225.1**	**430225**	Ø 340 Brake Disc Thickness [mm] 30 Minimum thickness [mm] 27 Vented + S
			→	+PR 1KS / 1KT		**24.0110-0356.1**	**410356**	Ø 272 Brake Disc Thickness [mm] 9.7 Minimum thickness [mm] 8 + S
			→	+PR 1KW		**24.0122-0219.1**	**422219**	Ø 310 Brake Disc Thickness [mm] 22 Minimum thickness [mm] 20 Vented
2.0 TSI RS	162	11/12→	←	05/13→; +PR 1ZJ		**24.0125-0145.1**	**425145**	Ø 288 Brake Disc Thickness [mm] 25 Minimum thickness [mm] 22 Vented + S
			←	05/13→; +PR 1ZK / 1ZU		**24.0125-0158.1**	**425158**	Ø 312 Brake Disc Thickness [mm] 25 Minimum thickness [mm] 22 Vented + S
						24.0325-0158.1	**525158**	Ø 312 Brake Disc Thickness [mm] 25 Minimum thickness [mm] 22 Vented + S
			←	05/13→; +PR 1LG		**24.0130-0225.1**	**430225**	Ø 340 Brake Disc Thickness [mm] 30 Minimum thickness [mm] 27 Vented + S

© 2022 Continental Aftermarket & Services GmbH

SKODA - OCTAVIA III Combi (5E5, 5E6) 11/12→

	kW				! #			
Brake Disc								
2.0 TSI RS	162	11/12→	➡	05/13→; +PR 1KS / 1KT		**24.0110-0356.1**	**410356**	Ø 272 Brake Disc Thickness [mm] 9.7 Minimum thickness [mm] 8 + S
			➡	05/13→; +PR 1KW		**24.0122-0219.1**	**422219**	Ø 310 Brake Disc Thickness [mm] 22 Minimum thickness [mm] 20 Vented
Sensor, wheel speed								
1.0 TSI 1.2 TSI 1.4 TSI 1.4 TSI G-TEC 1.6 1.6 TDI 1.8 TSI 2.0 TDI 2.0 TDI RS 2.0 TSI RS	85 81 103 81 81 81 132 105 135 169	05/16→ 05/15→02/17 11/12→ 11/13→ 01/14→ 05/13→ 11/12→ 11/12→ 05/13→ 05/15→	⬅			**24.0711-5273.3**	**360303**	
			⬅			**24.0711-5274.3**	**360304**	
			➡	for vehicles with parking assistant system	2	**24.0711-6337.3**	**360390**	
			➡	for cruise control system	2	**24.0711-6337.3**	**360390**	
			➡	02/17→; +PR 0N4	2	**24.0711-6337.3**	**360390**	
1.2 TSI 1.6 TDI 2.0 TDI	63 - 77 66 - 77 110	11/12→ 11/12→ 11/12→	⬅	02/13→;		**24.0711-5273.3**	**360303**	
			⬅	02/13→;		**24.0711-5274.3**	**360304**	
			➡	02/13→; for cruise control system	2	**24.0711-6337.3**	**360390**	
			➡	02/13→; for vehicles with parking assistant system	2	**24.0711-6337.3**	**360390**	
			➡	02/17→; +PR 0N4	2	**24.0711-6337.3**	**360390**	
1.4 TSI	110	08/14→10/20	⬅	05/15→;		**24.0711-5273.3**	**360303**	
			⬅	05/15→;		**24.0711-5274.3**	**360304**	
			➡	05/15→; for cruise control system	2	**24.0711-6337.3**	**360390**	
			➡	05/15→; for vehicles with parking assistant system	2	**24.0711-6337.3**	**360390**	
			➡	02/17→; +PR 0N4	2	**24.0711-6337.3**	**360390**	
1.5 TSI	110	02/17→	⬅			**24.0711-5273.3**	**360303**	
			⬅			**24.0711-5274.3**	**360304**	
			➡	for vehicles with parking assistant system	2	**24.0711-6337.3**	**360390**	
			➡	for cruise control system	2	**24.0711-6337.3**	**360390**	
			➡	+PR 0N4	2	**24.0711-6337.3**	**360390**	
1.5 TSI G-TEC 1.6 TDI 1.6 TDI 4x4 2.0 TSI 2.0 TSI RS	96 85 85 140 180	01/19→ 02/17→ 02/17→ 02/17→ 02/17→	⬅			**24.0711-5273.3**	**360303**	
			⬅			**24.0711-5274.3**	**360304**	
			➡	+PR 0N4	2	**24.0711-6337.3**	**360390**	
1.6 TDI 4x4 1.8 TSI 4x4 2.0 TDI / TDI RS 4x4 2.0 TDI 4x4	77 - 81 132 135 110	11/12→ 11/12→ 09/14→ 11/12→	⬅			**24.0711-5273.3**	**360303**	
			⬅			**24.0711-5274.3**	**360304**	
			➡	02/17→;		**24.0711-5401.3**	**360330**	
			➡	02/17→;		**24.0711-5402.3**	**360331**	
			➡	for cruise control system	2	**24.0711-6337.3**	**360390**	
			➡	for vehicles with parking assistant system	2	**24.0711-6337.3**	**360390**	
2.0 TSI 4x4	140	02/19→	⬅			**24.0711-5273.3**	**360303**	
			⬅			**24.0711-5274.3**	**360304**	
			➡			**24.0711-5401.3**	**360330**	
			➡			**24.0711-5402.3**	**360331**	
2.0 TSI RS	162	11/12→	⬅	05/13→;		**24.0711-5273.3**	**360303**	
			⬅	05/13→;		**24.0711-5274.3**	**360304**	
			➡	05/13→; for cruise control system	2	**24.0711-6337.3**	**360390**	
			➡	05/13→; for vehicles with parking assistant system	2	**24.0711-6337.3**	**360390**	
			➡	02/17→; +PR 0N4	2	**24.0711-6337.3**	**360390**	
Slave Cylinder, clutch								
1.0 TSI 1.2 TSI 1.4 TSI 1.4 TSI G-TEC 1.5 TSI 1.5 TSI G-TEC 1.6	85 81 103 81 110 96 81	05/16→ 05/15→02/17 11/12→ 11/13→ 02/17→ 01/19→ 01/14→		+PR 0EC / 0EM		**24.2519-1706.3**	**040096**	Ø 19

	kW				! #			
SKODA - OCTAVIA III Combi (5E5, 5E6) 11/12→								
Slave Cylinder, clutch								
1.6 TDI	81 - 85	05/13→		+PR 0EC / 0EM		**24.2519-1706.3**	**040096**	Ø 19
1.6 TDI 4x4	77 - 85	11/12→						
1.8 TSI	132	11/12→						
1.8 TSI 4x4	132	11/12→						
2.0 TDI	105	11/12→						
2.0 TDI / TDI RS 4x4	135	09/14→						
2.0 TDI 4x4	110	11/12→						
2.0 TDI RS	135	05/13→						
2.0 TSI	140	02/17→						
2.0 TSI 4x4	140	02/19→						
2.0 TSI RS	169 - 180	05/15→						
1.2 TSI	63 - 77	11/12→		02/13→; +PR 0EC / 0EM		**24.2519-1706.3**	**040096**	Ø 19
1.6 TDI	66 - 77	11/12→						
2.0 TDI	110	11/12→						
1.4 TSI	110	08/14→10/20		05/15→; +PR 0EC / 0EM		**24.2519-1706.3**	**040096**	Ø 19
2.0 TSI RS	162	11/12→		05/13→; +PR 0EC / 0EM		**24.2519-1706.3**	**040096**	Ø 19
SKODA - OCTAVIA IV (NX3, NN3) 01/20→								
Brake Caliper								
1.0 TSI	81	06/20→	←	+PR 1ZK; ⊞		**24.3571-1801.5**	**241387**	without holder
1.0 TSI e-TEC	81	06/20→						
1.4 TSI iV	110 - 150	06/20→	←	+PR 1ZK; ⊞		**24.3571-1802.5**	**241388**	without holder
1.4 TSI RS iV	110 - 180	06/20→						
1.5 TSI	110	01/20→						
1.5 TSI G-TEC	96	06/20→						
1.6 SRE	81	07/20→						
2.0 TDI	85 - 110	01/20→						
2.0 TDI 4x4	110	09/20→						
2.0 TDI RS	147	07/20→						
2.0 TDI RS 4x4	147	07/20→						
2.0 TSI 4x4	140	07/20→						
2.0 TSI RS	180	03/20→						
TSI e-TEC	110	11/20→						
Brake Pad Set, disc brake								
1.0 TSI	81	06/20→	←	+PR 1LG		**13.0460-2617.2**	**602617**	TRW + WK
1.0 TSI e-TEC	81	06/20→				**13.0470-2617.2**	**LD2617**	TRW + WK Ceramic
1.4 TSI iV	110 - 150	06/20→	←	+PR 1ZU		**13.0460-2785.2**	**602785**	TRW 25683 20,4 + WE / + WK
1.4 TSI RS iV	110 - 180	06/20→				**13.0470-2785.2**	**LD2785**	TRW 25683 20,4 + WE / + WK Ceramic
1.5 TSI	110	01/20→						
1.5 TSI G-TEC	96	06/20→						
1.6 SRE	81	07/20→						
2.0 TDI	85 - 110	01/20→						
2.0 TDI 4x4	110	09/20→						
2.0 TDI RS	147	07/20→						
2.0 TDI RS 4x4	147	07/20→						
2.0 TSI 4x4	140	07/20→						
2.0 TSI RS	180	03/20→						
TSI e-TEC	110	11/20→						
Warning Contact, brake pad wear								
1.0 TSI	81	06/20→	←		1	**24.8190-0065.2**	**620065**	
1.0 TSI e-TEC	81	06/20→						
1.4 TSI iV	110 - 150	06/20→						
1.4 TSI RS iV	110 - 180	06/20→						
1.5 TSI	110	01/20→						
1.5 TSI G-TEC	96	06/20→						
1.6 SRE	81	07/20→						
2.0 TDI	85 - 110	01/20→						
2.0 TDI 4x4	110	09/20→						
2.0 TDI RS	147	07/20→						
2.0 TDI RS 4x4	147	07/20→						
2.0 TSI 4x4	140	07/20→						
2.0 TSI RS	180	03/20→						
TSI e-TEC	110	11/20→						

© 2022 Continental Aftermarket & Services GmbH

	kW				! #			
SKODA - OCTAVIA IV (NX3, NN3) 01/20→								
Brake Disc								
1.0 TSI 1.0 TSI e-TEC 1.4 TSI iV	81 81 110 - 150	06/20→ 06/20→ 06/20→	←	+PR 1ZE		**24.0125-0145.1**	**425145**	Ø 288 Brake Disc Thickness [mm] 25 Minimum thickness [mm] 22 Vented + S
1.4 TSI RS iV	110 - 180	06/20→	←	+PR 1ZU		**24.0125-0158.1**	**425158**	Ø 312 Brake Disc Thickness [mm] 25 Minimum thickness [mm] 22 Vented + S
1.5 TSI 1.5 TSI G-TEC 1.6 SRE 2.0 TDI	110 96 81 85 - 110	01/20→ 06/20→ 07/20→ 01/20→	←	+PR 1LG		**24.0130-0225.1**	**430225**	Ø 340 Brake Disc Thickness [mm] 30 Minimum thickness [mm] 27 Vented + S
2.0 TDI 4x4 2.0 TDI RS 2.0 TDI RS 4x4 2.0 TSI 4x4 2.0 TSI RS TSI e-TEC	110 147 147 140 180 110	09/20→ 07/20→ 07/20→ 07/20→ 03/20→ 11/20→	→	+PR 1KE / 2EC / 0N4		**24.0110-0356.1**	**410356**	Ø 272 Brake Disc Thickness [mm] 9.7 Minimum thickness [mm] 8 + S
			→	+PR 1KE / 0N1		**24.0110-0409.1**	**410409**	Ø 272 Brake Disc Thickness [mm] 10 Minimum thickness [mm] 8 + S
			→	+PR 1KJ / 0N4		**24.0122-0219.1**	**422219**	Ø 310 Brake Disc Thickness [mm] 22 Minimum thickness [mm] 20 Vented
Sensor, wheel speed								
1.0 TSI 1.0 TSI e-TEC 1.4 TSI iV 1.4 TSI RS iV 1.5 TSI 1.5 TSI G-TEC 1.6 SRE 2.0 TDI 2.0 TDI RS 2.0 TSI RS TSI e-TEC	81 81 110 - 150 110 - 180 110 96 81 85 - 110 147 180 110	06/20→ 06/20→ 06/20→ 06/20→ 01/20→ 06/20→ 07/20→ 01/20→ 07/20→ 03/20→ 11/20→	←	■□		**24.0711-5273.3**	**360303**	
			←	□■		**24.0711-5274.3**	**360304**	
2.0 TDI 4x4 2.0 TDI RS 4x4 2.0 TSI 4x4	110 147 140	09/20→ 07/20→ 07/20→	←	■□		**24.0711-5273.3**	**360303**	
			←	□■		**24.0711-5274.3**	**360304**	
			→	+PR 0N4; ■□		**24.0711-5401.3**	**360330**	
			→	+PR 0N4; □■		**24.0711-5402.3**	**360331**	
SKODA - OCTAVIA IV Combi (NX5) 11/19→								
Brake Caliper								
1.0 TSI 1.0 TSI e-TEC 1.4 TSI iV	81 81 110 - 150	06/20→ 06/20→ 06/20→	←	+PR 1ZK; ■□		**24.3571-1801.5**	**241387**	without holder
			←	+PR 1ZK; □■		**24.3571-1802.5**	**241388**	without holder
1.4 TSI RS iV 1.5 TSI 1.5 TSI G-TEC 1.6 SRE 2.0 TDI 2.0 TDI 4x4 2.0 TDI RS 2.0 TDI RS 4x4 2.0 TFSI 2.0 TSI 4x4 2.0 TSI RS TSI e-TEC	110 - 180 110 96 81 85 - 110 110 147 147 140 140 180 110	06/20→ 11/19→ 06/20→ 06/20→ 11/19→ 09/20→ 07/20→ 07/20→ 09/20→ 09/20→ 03/20→ 11/20→						
Brake Pad Set, disc brake								
1.0 TSI 1.0 TSI e-TEC 1.4 TSI iV	81 81 110 - 150	06/20→ 06/20→ 06/20→	←	+PR 1LG		**13.0460-2617.2** **13.0470-2617.2**	**602617** **LD2617**	TRW + WK TRW + WK Ceramic
1.4 TSI RS iV 1.5 TSI 1.5 TSI G-TEC 1.6 SRE 2.0 TDI 2.0 TDI 4x4 2.0 TDI RS	110 - 180 110 96 81 85 - 110 110 147	06/20→ 11/19→ 06/20→ 06/20→ 11/19→ 09/20→ 07/20→	←	+PR 1ZU		**13.0460-2785.2** **13.0470-2785.2**	**602785** **LD2785**	TRW 25683 20,4 + WE / + WK TRW 25683 20,4 + WE / + WK Ceramic

	kW				! #			
SKODA - OCTAVIA IV Combi (NX5) 11/19→								
Brake Pad Set, disc brake								
2.0 TDI RS 4x4 2.0 TFSI 2.0 TSI 4x4 2.0 TSI RS TSI e-TEC	147 140 140 180 110	07/20→ 09/20→ 09/20→ 03/20→ 11/20→	←	+PR 1LG		**13.0460-2617.2** **13.0470-2617.2**	**602617** **LD2617**	TRW + WK TRW + WK Ceramic
			←	+PR 1ZU		**13.0460-2785.2** **13.0470-2785.2**	**602785** **LD2785**	TRW 25683 20,4 + WE / + WK TRW 25683 20,4 + WE / + WK Ceramic
Warning Contact, brake pad wear								
1.0 TSI 1.0 TSI e-TEC 1.4 TSI iV 1.4 TSI RS iV 1.5 TSI 1.5 TSI G-TEC 1.6 SRE 2.0 TDI 2.0 TDI 4x4 2.0 TDI RS 2.0 TDI RS 4x4 2.0 TFSI 2.0 TSI 4x4 2.0 TSI RS TSI e-TEC	81 81 110 - 150 110 - 180 110 96 81 85 - 110 110 147 147 140 140 180 110	06/20→ 06/20→ 06/20→ 06/20→ 11/19→ 06/20→ 06/20→ 11/19→ 09/20→ 07/20→ 07/20→ 09/20→ 09/20→ 03/20→ 11/20→	←		1	**24.8190-0065.2**	**620065**	
Brake Disc								
1.0 TSI 1.0 TSI e-TEC 1.4 TSI iV 1.4 TSI RS iV 1.5 TSI 1.5 TSI G-TEC 1.6 SRE 2.0 TDI 2.0 TDI 4x4 2.0 TDI RS 2.0 TDI RS 4x4 2.0 TFSI 2.0 TSI 4x4 2.0 TSI RS TSI e-TEC	81 81 110 - 150 110 - 180 110 96 81 85 - 110 110 147 147 140 140 180 110	06/20→ 06/20→ 06/20→ 06/20→ 11/19→ 06/20→ 06/20→ 11/19→ 09/20→ 07/20→ 07/20→ 09/20→ 09/20→ 03/20→ 11/20→	←	+PR 1ZE		**24.0125-0145.1**	**425145**	Ø 288 Brake Disc Thickness [mm] 25 Minimum thickness [mm] 22 Vented + S
			←	+PR 1ZU		**24.0125-0158.1**	**425158**	Ø 312 Brake Disc Thickness [mm] 25 Minimum thickness [mm] 22 Vented + S
			←	+PR 1LG		**24.0130-0225.1**	**430225**	Ø 340 Brake Disc Thickness [mm] 30 Minimum thickness [mm] 27 Vented + S
			→	+PR 1KE / 2EC / 0N4		**24.0110-0356.1**	**410356**	Ø 272 Brake Disc Thickness [mm] 9.7 Minimum thickness [mm] 8 + S
			→	+PR 1KE / 0N1		**24.0110-0409.1**	**410409**	Ø 272 Brake Disc Thickness [mm] 10 Minimum thickness [mm] 8 + S
			→	+PR 1KJ / 0N4		**24.0122-0219.1**	**422219**	Ø 310 Brake Disc Thickness [mm] 22 Minimum thickness [mm] 20 Vented
Sensor, wheel speed								
1.0 TSI 1.0 TSI e-TEC 1.4 TSI iV 1.4 TSI RS iV 1.5 TSI 1.5 TSI G-TEC 1.6 SRE 2.0 TDI 2.0 TDI RS 2.0 TFSI 2.0 TSI RS TSI e-TEC	81 81 110 - 150 110 - 180 110 96 81 85 - 110 147 140 180 110	06/20→ 06/20→ 06/20→ 06/20→ 11/19→ 06/20→ 06/20→ 11/19→ 07/20→ 09/20→ 03/20→ 11/20→	←			**24.0711-5273.3**	**360303**	
			←			**24.0711-5274.3**	**360304**	
2.0 TDI 4x4 2.0 TDI RS 4x4 2.0 TSI 4x4	110 147 140	09/20→ 07/20→ 09/20→	←			**24.0711-5273.3**	**360303**	
			←			**24.0711-5274.3**	**360304**	
			→	+PR 0N4;		**24.0711-5401.3**	**360330**	
			→	+PR 0N4;		**24.0711-5402.3**	**360331**	
SKODA - RAPID (NA2) 09/11→								
Guide Bolt, brake caliper								
1.6 TDI	77	10/11→12/13		+PR 1ZG	2	**11.8171-0008.1**	**990049**	ATE
				+PR 1ZC	2	**11.8171-0008.1**	**990049**	ATE

© 2022 Continental Aftermarket & Services GmbH

	kW				! #			
SKODA - RAPID (NA2) 09/11→								
Brake Disc								
1.6 TDI	77	10/11→12/13	➡	+PR 1KT		**24.0109-0123.1**	**409123**	Ø 230 Brake Disc Thickness [mm] 9 Minimum thickness [mm] 7 + S
Sensor, wheel speed								
1.6 TDI	77	10/11→12/13	⬅	⊞		**24.0711-5273.3**	**360303**	
			⬅	⊞		**24.0711-5274.3**	**360304**	
Accessory Kit, brake shoes								
1.6 TDI	77	10/11→12/13	➡	+PR 1KL		**03.0137-9309.2**	**669309**	AP
Slave Cylinder, clutch								
1.6 TDI	77	10/11→12/13		+PR G0C / 0EM		**24.2519-1706.3**	**040096**	Ø 19
SKODA - RAPID (NH3, NK3, NK6) 07/12→								
Guide Bolt, brake caliper								
1.0 TSI 1.2 TSI 1.4 TDI 1.4 TSI 1.6 TDI	70 - 81 66 - 81 66 92 85	06/17→12/19 05/15→12/19 05/15→12/19 05/15→12/19 05/15→12/19		+PR 1ZC	2	**11.8171-0008.1**	**990049**	ATE
1.2	55	07/12→06/15		10/12→; +PR 1ZG	2	**11.8171-0008.1**	**990049**	ATE
1.2 LPG 1.2 TSI 1.4 TSI 1.6 TDI	55 - 63 63 - 77 90 77	07/12→06/15 07/12→05/15 07/12→06/15 07/12→12/19		10/12→; +PR 1ZC	2	**11.8171-0008.1**	**990049**	ATE
1.6	77	07/12→06/15		07/13→; +PR 1ZG	2	**11.8171-0008.1**	**990049**	ATE
				07/13→; +PR 1ZC	2	**11.8171-0008.1**	**990049**	ATE
1.6 1.6 SRE 1.6 TDI	81 66 66	05/15→12/19 06/15→12/19 08/13→05/15		+PR 1ZC	2	**11.8171-0008.1**	**990049**	ATE
				+PR 1ZG	2	**11.8171-0008.1**	**990049**	ATE
Brake Disc								
1.0 TSI 1.2 TSI 1.4 TDI 1.4 TSI 1.6 1.6 SRE 1.6 TDI	70 - 81 66 - 81 66 92 81 66 66 - 85	06/17→12/19 05/15→12/19 05/15→12/19 05/15→12/19 05/15→12/19 06/15→12/19 08/13→12/19	➡	+PR 1KT		**24.0109-0123.1**	**409123**	Ø 230 Brake Disc Thickness [mm] 9 Minimum thickness [mm] 7 + S
1.2 1.2 LPG 1.2 TSI 1.4 TSI 1.6 TDI	55 55 - 63 63 - 77 90 77	07/12→06/15 07/12→06/15 07/12→05/15 07/12→06/15 07/12→12/19	➡	10/12→; +PR 1KT		**24.0109-0123.1**	**409123**	Ø 230 Brake Disc Thickness [mm] 9 Minimum thickness [mm] 7 + S
1.6	77	07/12→06/15	➡	07/13→; +PR 1KT		**24.0109-0123.1**	**409123**	Ø 230 Brake Disc Thickness [mm] 9 Minimum thickness [mm] 7 + S
Sensor, wheel speed								
1.0 TSI	70 - 81	06/17→12/19	⬅	⊞		**24.0711-5273.3**	**360303**	
1.2 TSI 1.4 TDI 1.4 TSI 1.6 1.6 SRE 1.6 TDI	66 - 81 66 92 81 66 66 - 85	05/15→12/19 05/15→12/19 05/15→12/19 05/15→12/19 06/15→12/19 08/13→12/19	⬅	⊞		**24.0711-5274.3**	**360304**	
1.2	55	07/12→06/15	⬅	10/12→; ⊞		**24.0711-5273.3**	**360303**	
1.2 LPG 1.2 TSI 1.4 TSI 1.6 TDI	55 - 63 63 - 77 90 77	07/12→06/15 07/12→05/15 07/12→06/15 07/12→12/19	⬅	10/12→; ⊞		**24.0711-5274.3**	**360304**	

	kW				! #			
SKODA - RAPID (NH3, NK3, NK6) 07/12→								
Sensor, wheel speed								
1.6	77	07/12→06/15	←	07/13→;		**24.0711-5273.3**	**360303**	
			←	07/13→;		**24.0711-5274.3**	**360304**	
Accessory Kit, brake shoes								
1.0 TSI 1.2 TSI 1.4 TDI 1.4 TSI 1.6 1.6 SRE 1.6 TDI	70 - 81 66 - 81 66 92 81 66 66 - 85	06/17→12/19 05/15→12/19 05/15→12/19 05/15→12/19 05/15→12/19 06/15→12/19 08/13→12/19	→	+PR 1KL		**03.0137-9309.2**	**669309**	AP
1.2 1.2 LPG 1.2 TSI 1.4 TSI 1.6 TDI	55 55 - 63 63 - 77 90 77	07/12→06/15 07/12→06/15 07/12→05/15 07/12→06/15 07/12→12/19	→	10/12→; +PR 1KL		**03.0137-9309.2**	**669309**	AP
1.6	77	07/12→06/15	→	07/13→; +PR 1KL		**03.0137-9309.2**	**669309**	AP
Slave Cylinder, clutch								
1.0 TSI 1.2 TSI 1.4 TDI 1.4 TSI 1.6 1.6 SRE 1.6 TDI	70 - 81 66 - 81 66 92 81 66 66 - 85	06/17→12/19 05/15→12/19 05/15→12/19 05/15→12/19 05/15→12/19 06/15→12/19 08/13→12/19		+PR G0C / 0EM		**24.2519-1706.3**	**040096**	Ø 19
1.2 1.2 LPG 1.2 TSI 1.4 TSI 1.6 TDI	55 55 - 63 63 - 77 90 77	07/12→06/15 07/12→06/15 07/12→05/15 07/12→06/15 07/12→12/19		10/12→; +PR G0C / 0EM		**24.2519-1706.3**	**040096**	Ø 19
1.6	77	07/12→06/15		07/13→; +PR G0C / 0EM		**24.2519-1706.3**	**040096**	Ø 19
SKODA - RAPID Spaceback (NH1) 07/12→12/19								
Guide Bolt, brake caliper								
1.0 TSI 1.2 TSI 1.4 TDI 1.4 TSI 1.6 TDI	70 - 81 66 - 81 66 92 85	06/17→12/19 05/15→12/19 05/15→12/19 05/15→12/19 05/15→12/19		+PR 1ZC	2	**11.8171-0008.1**	**990049**	ATE
1.2 1.2 LPG 1.2 TSI 1.4 TSI 1.6 TDI	55 55 - 63 63 - 77 90 77	07/12→06/15 07/12→06/15 07/12→05/15 07/12→06/15 07/12→12/19		10/12→; +PR 1ZG	2	**11.8171-0008.1**	**990049**	ATE
				10/12→; +PR 1ZC	2	**11.8171-0008.1**	**990049**	ATE
1.6	77	07/12→06/15		07/13→; +PR 1ZG	2	**11.8171-0008.1**	**990049**	ATE
				07/13→; +PR 1ZC	2	**11.8171-0008.1**	**990049**	ATE
1.6 SRE 1.6 TDI	81 66	05/15→12/19 08/13→05/15		+PR 1ZC	2	**11.8171-0008.1**	**990049**	ATE
				+PR 1ZG	2	**11.8171-0008.1**	**990049**	ATE
Brake Disc								
1.0 TSI 1.2 TSI 1.4 TDI 1.4 TSI 1.6 SRE 1.6 TDI	70 - 81 66 - 81 66 92 81 66 - 85	06/17→12/19 05/15→12/19 05/15→12/19 05/15→12/19 05/15→12/19 08/13→12/19	→	+PR 1KT		**24.0109-0123.1**	**409123**	Ø 230 Brake Disc Thickness [mm] 9 Minimum thickness [mm] 7 + S
1.2 1.2 LPG	55 55 - 63	07/12→06/15 07/12→06/15	→	10/12→; +PR 1KT		**24.0109-0123.1**	**409123**	Ø 230 Brake Disc Thickness [mm] 9 Minimum thickness [mm] 7 + S

© 2022 Continental Aftermarket & Services GmbH

	kW				! #			
SKODA - RAPID Spaceback (NH1) 07/12→12/19								
Brake Disc								
1.2 TSI 1.4 TSI 1.6 TDI	63 - 77 90 77	07/12→05/15 07/12→06/15 07/12→12/19	➡	10/12→; +PR 1KT		**24.0109-0123.1**	**409123**	Ø 230 Brake Disc Thickness [mm] 9 Minimum thickness [mm] 7 + S
1.6	77	07/12→06/15	➡	07/13→; +PR 1KT		**24.0109-0123.1**	**409123**	Ø 230 Brake Disc Thickness [mm] 9 Minimum thickness [mm] 7 + S
Sensor, wheel speed								
1.0 TSI	70 - 81	06/17→12/19	⬅			**24.0711-5273.3**	**360303**	
1.2 TSI 1.4 TDI 1.4 TSI 1.6 SRE 1.6 TDI	66 - 81 66 92 81 66 - 85	05/15→12/19 05/15→12/19 05/15→12/19 05/15→12/19 08/13→12/19	⬅			**24.0711-5274.3**	**360304**	
1.2 1.2 LPG 1.2 TSI 1.4 TSI 1.6 TDI	55 55 - 63 63 - 77 90 77	07/12→06/15 07/12→06/15 07/12→05/15 07/12→06/15 07/12→12/19	⬅	10/12→;		**24.0711-5273.3**	**360303**	
			⬅	10/12→;		**24.0711-5274.3**	**360304**	
1.6	77	07/12→06/15	⬅	07/13→;		**24.0711-5273.3**	**360303**	
			⬅	07/13→;		**24.0711-5274.3**	**360304**	
Accessory Kit, brake shoes								
1.0 TSI 1.2 TSI 1.4 TDI 1.4 TSI 1.6 SRE 1.6 TDI	70 - 81 66 - 81 66 92 81 66 - 85	06/17→12/19 05/15→12/19 05/15→12/19 05/15→12/19 05/15→12/19 08/13→12/19	➡	+PR 1KL		**03.0137-9309.2**	**669309**	AP
1.2 1.2 LPG 1.2 TSI 1.4 TSI 1.6 TDI	55 55 - 63 63 - 77 90 77	07/12→06/15 07/12→06/15 07/12→05/15 07/12→06/15 07/12→12/19	➡	10/12→; +PR 1KL		**03.0137-9309.2**	**669309**	AP
1.6	77	07/12→06/15	➡	07/13→; +PR 1KL		**03.0137-9309.2**	**669309**	AP
Slave Cylinder, clutch								
1.0 TSI 1.2 TSI 1.4 TDI 1.4 TSI 1.6 SRE 1.6 TDI	70 - 81 66 - 81 66 92 81 66 - 85	06/17→12/19 05/15→12/19 05/15→12/19 05/15→12/19 05/15→12/19 08/13→12/19		+PR G0C / 0EM		**24.2519-1706.3**	**040096**	Ø 19
1.2 1.2 LPG 1.2 TSI 1.4 TSI 1.6 TDI	55 55 - 63 63 - 77 90 77	07/12→06/15 07/12→06/15 07/12→05/15 07/12→06/15 07/12→12/19		10/12→; +PR G0C / 0EM		**24.2519-1706.3**	**040096**	Ø 19
1.6	77	07/12→06/15		07/13→; +PR G0C / 0EM		**24.2519-1706.3**	**040096**	Ø 19
SKODA - ROOMSTER (5J7) 03/06→05/15								
Guide Bolt, brake caliper								
1.2	47	05/06→01/07		07/06→; +PR 1LQ / 1LR / 1ZG	2	**11.8171-0008.1**	**990049**	ATE
				07/06→; +PR 1ZC	2	**11.8171-0008.1**	**990049**	ATE
1.2 1.2 LPG 1.2 TDI 1.2 TSI 1.4 1.4 LPG 1.6	51 51 55 63 - 77 63 63 77	01/07→05/15 03/09→05/15 03/10→05/15 03/10→05/15 09/06→05/15 03/10→05/15 09/06→05/15		→ 04/15; +PR 1LQ / 1LR / 1ZG	2	**11.8171-0008.1**	**990049**	ATE
				→ 04/15; +PR 1ZC	2	**11.8171-0008.1**	**990049**	ATE

	kW				! #			
SKODA - ROOMSTER (5J7) 03/06→05/15								
Guide Bolt, brake caliper								
1.6 TDI	66 - 77	03/10→05/15		→ 04/15; +PR 1LQ / 1LR / 1ZG	2	**11.8171-0008.1**	**990049**	ATE
				→ 04/15; +PR 1ZC	2	**11.8171-0008.1**	**990049**	ATE
1.4 TDI	51 - 59	07/06→03/10		+PR 1LQ / 1LR / 1ZG	2	**11.8171-0008.1**	**990049**	ATE
1.6 LPG 1.9 TDI	77 77	06/06→07/10 09/06→03/10		+PR 1ZC	2	**11.8171-0008.1**	**990049**	ATE
Brake Disc								
1.2	47	05/06→01/07	➡	07/06→; +PR 1KK / 1KT		**24.0109-0123.1**	**409123**	Ø 230 Brake Disc Thickness [mm] 9 Minimum thickness [mm] 7 + S
1.2 1.2 LPG 1.2 TDI 1.2 TSI 1.4 1.4 LPG 1.6 1.6 TDI	51 51 55 63 - 77 63 63 77 66 - 77	01/07→05/15 03/09→05/15 03/10→05/15 03/10→05/15 09/06→05/15 03/10→05/15 09/06→05/15 03/10→05/15	➡	→ 04/15; +PR 1KK / 1KT		**24.0109-0123.1**	**409123**	Ø 230 Brake Disc Thickness [mm] 9 Minimum thickness [mm] 7 + S
1.4 TDI 1.6 LPG 1.9 TDI	51 - 59 77 77	07/06→03/10 06/06→07/10 09/06→03/10	➡	+PR 1KK / 1KT		**24.0109-0123.1**	**409123**	Ø 230 Brake Disc Thickness [mm] 9 Minimum thickness [mm] 7 + S
Sensor, wheel speed								
1.2	47	05/06→01/07	⬅	07/06→; ⊞		**24.0711-5273.3**	**360303**	
			⬅	07/06→; ⊟		**24.0711-5274.3**	**360304**	
1.2 1.2 LPG 1.2 TDI 1.2 TSI 1.4 1.4 LPG 1.6 1.6 TDI	51 51 55 63 - 77 63 63 77 66 - 77	01/07→05/15 03/09→05/15 03/10→05/15 03/10→05/15 09/06→05/15 03/10→05/15 09/06→05/15 03/10→05/15	⬅	→ 04/15; ⊞		**24.0711-5273.3**	**360303**	
			⬅	→ 04/15; ⊟		**24.0711-5274.3**	**360304**	
1.4 TDI 1.6 LPG 1.9 TDI	51 - 59 77 77	07/06→03/10 06/06→07/10 09/06→03/10	⬅	⊞		**24.0711-5273.3**	**360303**	
			⬅	⊟		**24.0711-5274.3**	**360304**	
Accessory Kit, brake shoes								
1.2 1.2 LPG 1.4 1.6	51 51 63 77	01/07→05/15 03/09→05/15 09/06→05/15 09/06→05/15	➡	03/10→ 04/15; +PR 1KL		**03.0137-9309.2**	**669309**	AP
1.2 TDI 1.2 TSI 1.4 LPG 1.6 TDI	55 63 - 77 63 66 - 77	03/10→05/15 03/10→05/15 03/10→05/15 03/10→05/15	➡	→ 04/15; +PR 1KL		**03.0137-9309.2**	**669309**	AP
1.4 TDI 1.6 LPG 1.9 TDI	51 - 59 77 77	07/06→03/10 06/06→07/10 09/06→03/10	➡	03/10→; +PR 1KL		**03.0137-9309.2**	**669309**	AP
Slave Cylinder, clutch								
1.2	47	05/06→01/07		07/06→; +PR 0EM		**24.2519-1706.3**	**040096**	Ø 19
1.2 1.2 LPG 1.2 TDI 1.2 TSI 1.4 1.4 LPG 1.6 1.6 TDI	51 51 55 63 - 77 63 63 77 66 - 77	01/07→05/15 03/09→05/15 03/10→05/15 03/10→05/15 09/06→05/15 03/10→05/15 09/06→05/15 03/10→05/15		→ 04/15; +PR 0EM		**24.2519-1706.3**	**040096**	Ø 19
1.4 TDI 1.6 LPG 1.9 TDI	51 - 59 77 77	07/06→03/10 06/06→07/10 09/06→03/10		+PR 0EM		**24.2519-1706.3**	**040096**	Ø 19

© 2022 Continental Aftermarket & Services GmbH

	kW				! #			
SKODA - ROOMSTER Praktik (5J) 03/07→05/15								
Guide Bolt, brake caliper								
1.2 1.2 TDI 1.2 TSI 1.4 1.6 TDI	51 55 63 63 66	03/07→05/15 03/10→05/15 03/10→05/15 03/07→05/15 03/10→05/15		→ 04/15; +PR 1LQ / 1LR / 1ZG	2	**11.8171-0008.1**	**990049**	ATE
				→ 04/15; +PR 1ZC	2	**11.8171-0008.1**	**990049**	ATE
1.4 TDI	51 - 59	03/07→03/10		+PR 1LQ / 1LR / 1ZG	2	**11.8171-0008.1**	**990049**	ATE
				+PR 1ZC	2	**11.8171-0008.1**	**990049**	ATE
Brake Disc								
1.2 1.2 TDI 1.2 TSI 1.4 1.6 TDI	51 55 63 63 66	03/07→05/15 03/10→05/15 03/10→05/15 03/07→05/15 03/10→05/15	➡	→ 04/15; +PR 1KK / 1KT		**24.0109-0123.1**	**409123**	Ø 230 Brake Disc Thickness [mm] 9 Minimum thickness [mm] 7 + S
1.4 TDI	51 - 59	03/07→03/10	➡	+PR 1KK / 1KT		**24.0109-0123.1**	**409123**	Ø 230 Brake Disc Thickness [mm] 9 Minimum thickness [mm] 7 + S
Sensor, wheel speed								
1.2 1.2 TDI 1.2 TSI 1.4 1.6 TDI	51 55 63 63 66	03/07→05/15 03/10→05/15 03/10→05/15 03/07→05/15 03/10→05/15	⬅	→ 04/15; ⊞		**24.0711-5273.3**	**360303**	
			⬅	→ 04/15; ⊞		**24.0711-5274.3**	**360304**	
1.4 TDI	51 - 59	03/07→03/10	⬅	⊞		**24.0711-5273.3**	**360303**	
			⬅	⊞		**24.0711-5274.3**	**360304**	
Accessory Kit, brake shoes								
1.2 1.4	51 63	03/07→05/15 03/07→05/15	➡	03/10→ 04/15; +PR 1KL		**03.0137-9309.2**	**669309**	AP
1.2 TDI 1.2 TSI 1.6 TDI	55 63 66	03/10→05/15 03/10→05/15 03/10→05/15	➡	→ 04/15; +PR 1KL		**03.0137-9309.2**	**669309**	AP
1.4 TDI	51 - 59	03/07→03/10	➡	03/10→; +PR 1KL		**03.0137-9309.2**	**669309**	AP
Slave Cylinder, clutch								
1.2 1.2 TDI 1.2 TSI 1.4 1.6 TDI	51 55 63 63 66	03/07→05/15 03/10→05/15 03/10→05/15 03/07→05/15 03/10→05/15		→ 04/15; +PR 0EM		**24.2519-1706.3**	**040096**	Ø 19
1.4 TDI	51 - 59	03/07→03/10		+PR 0EM		**24.2519-1706.3**	**040096**	Ø 19
SKODA - SCALA (NW1) 02/19→								
Brake Disc								
1.0 TGI CNG 1.0 TSI 1.5 TSI 1.6 SRE 1.6 TDI	66 70 - 85 110 81 70 - 85	11/19→ 02/19→ 02/19→ 02/19→ 02/19→	⬅	+PR 1ZG		**24.0122-0312.1**	**422312**	Ø 256 Brake Disc Thickness [mm] 22 Minimum thickness [mm] 19 Vented + S
			⬅	+PR 1ZE / 1ZS		**24.0124-0263.1**	**424263**	Ø 275.7 Brake Disc Thickness [mm] 24 Minimum thickness [mm] 21 Vented + S
			➡	+PR 1KV		**24.0109-0123.1**	**409123**	Ø 230 Brake Disc Thickness [mm] 9 Minimum thickness [mm] 7 + S
Sensor, wheel speed								
1.0 TGI CNG 1.0 TSI 1.5 TSI 1.6 SRE 1.6 TDI	66 70 - 85 110 81 70 - 85	11/19→ 02/19→ 02/19→ 02/19→ 02/19→	⬅	⊞		**24.0711-5273.3**	**360303**	
			⬅	⊞		**24.0711-5274.3**	**360304**	
Wheel Brake Cylinder								
1.0 TGI CNG 1.0 TSI 1.5 TSI 1.6 SRE 1.6 TDI	66 70 - 85 110 81 70 - 85	11/19→ 02/19→ 02/19→ 02/19→ 02/19→	➡	+PR 1KA	2	**24.3220-1757.3**	**020605**	ALU

	kW				! #			
SKODA - SCALA (NW1) 02/19→								
Accessory Kit, brake shoes								
1.0 TGI CNG 1.0 TSI 1.5 TSI 1.6 SRE 1.6 TDI	66 70 - 85 110 81 70 - 85	11/19→ 02/19→ 02/19→ 02/19→ 02/19→	➡	+PR 1KA		**03.0137-9309.2**	**669309**	AP
Brake Shoe Set								
1.0 TGI CNG 1.0 TSI 1.5 TSI 1.6 SRE 1.6 TDI	66 70 - 85 110 81 70 - 85	11/19→ 02/19→ 02/19→ 02/19→ 02/19→	➡	+PR 1KA		**03.0137-0540.2**	**650540**	Ø 228 Width [mm] 42 + HEB
SKODA - SUPERB I (3U4) 12/01→03/08								
Guide Bolt, brake caliper								
1.8 T 2.0	110 85	12/01→03/08 12/01→03/08		→ 02/08	2	**11.8171-0008.1**	**990049**	ATE
1.9 TDI 2.5 TDI	74 - 77 114	08/02→05/07 12/01→08/03			2	**11.8171-0008.1**	**990049**	ATE
1.9 TDI 2.0 TDI 2.5 TDI 2.8 V6	85 - 96 103 120 140 - 142	12/01→03/08 10/05→03/08 06/03→03/08 12/01→03/08		→ 12/07	2	**11.8171-0008.1**	**990049**	ATE
2.0 TDI	91	02/06→03/08	⬅		2	**11.8171-0008.1**	**990049**	ATE
Brake Disc								
1.8 T 2.0	110 85	12/01→03/08 12/01→03/08	⬅	3U-69101370→; → 02/08		**24.0125-0145.1**	**425145**	Ø 288 Brake Disc Thickness [mm] 25 Minimum thickness [mm] 22 Vented + S
1.9 TDI	74 - 77	08/02→05/07	⬅	3U-69101370→		**24.0125-0145.1**	**425145**	Ø 288 Brake Disc Thickness [mm] 25 Minimum thickness [mm] 22 Vented + S
1.9 TDI	85	01/07→03/08	⬅	→ 12/07		**24.0125-0145.1**	**425145**	Ø 288 Brake Disc Thickness [mm] 25 Minimum thickness [mm] 22 Vented + S
1.9 TDI	96	12/01→03/08	⬅	3U-69101370→; → 12/07		**24.0125-0145.1**	**425145**	Ø 288 Brake Disc Thickness [mm] 25 Minimum thickness [mm] 22 Vented + S
2.0 TDI 2.5 TDI	91 114	02/06→03/08 12/01→08/03	⬅	3U-69100011→		**24.0125-0158.1** **24.0325-0158.1**	**425158** **525158**	Ø 312 Brake Disc Thickness [mm] 25 Minimum thickness [mm] 22 Vented + S Ø 312 Brake Disc Thickness [mm] 25 Minimum thickness [mm] 22 Vented + S
2.0 TDI 2.5 TDI 2.8 V6	103 120 142	10/05→03/08 06/03→03/08 12/01→03/08	⬅	3U-69100011→; → 12/07		**24.0125-0158.1** **24.0325-0158.1**	**425158** **525158**	Ø 312 Brake Disc Thickness [mm] 25 Minimum thickness [mm] 22 Vented + S Ø 312 Brake Disc Thickness [mm] 25 Minimum thickness [mm] 22 Vented + S
2.8 V6	140	06/02→03/08	⬅	3U-69100011→; → 12/07		**24.0125-0158.1**	**425158**	Ø 312 Brake Disc Thickness [mm] 25 Minimum thickness [mm] 22 Vented + S
SKODA - SUPERB II (3T4) 03/08→05/15								
Guide Bolt, brake caliper								
1.4 TSI 1.8 TSI 2.0 TDI	92 118 125	07/08→05/15 03/08→05/15 07/08→05/15		08/08→ 02/15; +PR 1ZE	2	**11.8171-0008.1**	**990049**	ATE
				08/08→ 02/15; +PR 1LJ / 1ZA	2	**11.8171-0008.1**	**990049**	ATE
				08/08→ 02/15; +PR 1LK	2	**11.8171-0008.1**	**990049**	ATE
1.6 TDI	77	09/10→05/15		→ 02/15; +PR 1ZE	2	**11.8171-0008.1**	**990049**	ATE

© 2022 Continental Aftermarket & Services GmbH

SKODA - SUPERB II (3T4) 03/08→05/15

Guide Bolt, brake caliper

	kW				! #			
1.8 TSI 1.8 TSI 4x4 2.0 TDI 16V 2.0 TDI 16V 4x4 2.0 TFSI 3.6 FSI 4x4	112 112 - 118 103 103 147 191	03/09→05/15 11/08→05/15 01/09→05/15 11/10→05/15 05/10→05/15 11/08→05/15		→ 02/15; +PR 1LJ / 1ZA	2	**11.8171-0008.1**	**990049**	ATE
				→ 02/15; +PR 1LK	2	**11.8171-0008.1**	**990049**	ATE
1.9 TDI 2.0 TDI	77 103	03/08→11/10 03/08→05/10		08/08→; +PR 1ZE	2	**11.8171-0008.1**	**990049**	ATE
				08/08→; +PR 1LJ / 1ZA	2	**11.8171-0008.1**	**990049**	ATE
				08/08→; +PR 1LK	2	**11.8171-0008.1**	**990049**	ATE
2.0 TDI 4x4	125	09/08→05/15		10/08→ 02/15; +PR 1ZE	2	**11.8171-0008.1**	**990049**	ATE
				10/08→ 02/15; +PR 1LJ / 1ZA	2	**11.8171-0008.1**	**990049**	ATE
				10/08→ 02/15; +PR 1LK	2	**11.8171-0008.1**	**990049**	ATE

Brake Disc

1.4 TSI 1.8 TSI 2.0 TDI	92 118 125	07/08→05/15 03/08→05/15 07/08→05/15	⬅	08/08→ 02/15; +PR 1ZE		**24.0125-0145.1**	**425145**	Ø 288 Brake Disc Thickness [mm] 25 Minimum thickness [mm] 22 Vented + S
			⬅	08/08→ 02/15; +PR 1LJ / 1ZA		**24.0125-0158.1** **24.0325-0158.1**	**425158** **525158**	Ø 312 Brake Disc Thickness [mm] 25 Minimum thickness [mm] 22 Vented + S Ø 312 Brake Disc Thickness [mm] 25 Minimum thickness [mm] 22 Vented + S
			➡	08/08→ 02/15; +PR 1KS		**24.0110-0356.1**	**410356**	Ø 272 Brake Disc Thickness [mm] 9.7 Minimum thickness [mm] 8 + S
1.6 TDI 1.8 TSI 2.0 TDI 16V 2.0 TFSI	77 112 103 147	09/10→05/15 03/09→05/15 01/09→05/15 05/10→05/15	⬅	→ 02/15; +PR 1ZE		**24.0125-0145.1**	**425145**	Ø 288 Brake Disc Thickness [mm] 25 Minimum thickness [mm] 22 Vented + S
			⬅	→ 02/15; +PR 1LJ / 1ZA		**24.0125-0158.1** **24.0325-0158.1**	**425158** **525158**	Ø 312 Brake Disc Thickness [mm] 25 Minimum thickness [mm] 22 Vented + S Ø 312 Brake Disc Thickness [mm] 25 Minimum thickness [mm] 22 Vented + S
			➡	→ 02/15; +PR 1KS		**24.0110-0356.1**	**410356**	Ø 272 Brake Disc Thickness [mm] 9.7 Minimum thickness [mm] 8 + S
1.8 TSI 4x4 2.0 TDI 16V 4x4 3.6 FSI 4x4	112 - 118 103 191	11/08→05/15 11/10→05/15 11/08→05/15	⬅	→ 02/15; +PR 1ZE		**24.0125-0145.1**	**425145**	Ø 288 Brake Disc Thickness [mm] 25 Minimum thickness [mm] 22 Vented + S
			⬅	→ 02/15; +PR 1LJ / 1ZA		**24.0125-0158.1** **24.0325-0158.1**	**425158** **525158**	Ø 312 Brake Disc Thickness [mm] 25 Minimum thickness [mm] 22 Vented + S Ø 312 Brake Disc Thickness [mm] 25 Minimum thickness [mm] 22 Vented + S
			➡	→ 02/15; +PR 1KS		**24.0110-0356.1**	**410356**	Ø 272 Brake Disc Thickness [mm] 9.7 Minimum thickness [mm] 8 + S
			➡	→ 02/15; +PR 2EA		**24.0122-0219.1**	**422219**	Ø 310 Brake Disc Thickness [mm] 22 Minimum thickness [mm] 20 Vented
1.9 TDI 2.0 TDI	77 103	03/08→11/10 03/08→05/10	⬅	08/08→; +PR 1ZE		**24.0125-0145.1**	**425145**	Ø 288 Brake Disc Thickness [mm] 25 Minimum thickness [mm] 22 Vented + S
			⬅	08/08→; +PR 1LJ / 1ZA		**24.0125-0158.1** **24.0325-0158.1**	**425158** **525158**	Ø 312 Brake Disc Thickness [mm] 25 Minimum thickness [mm] 22 Vented + S Ø 312 Brake Disc Thickness [mm] 25 Minimum thickness [mm] 22 Vented + S

© 2022 Continental Aftermarket & Services GmbH

	kW				! #			
SKODA - SUPERB II (3T4) 03/08→05/15								
Brake Disc								
1.9 TDI 2.0 TDI	77 103	03/08→11/10 03/08→05/10	➡	08/08→; +PR 1KS		**24.0110-0356.1**	**410356**	Ø 272 Brake Disc Thickness [mm] 9.7 Minimum thickness [mm] 8 + S
2.0 TDI 4x4	125	09/08→05/15	⬅	10/08→ 02/15; +PR 1ZE		**24.0125-0145.1**	**425145**	Ø 288 Brake Disc Thickness [mm] 25 Minimum thickness [mm] 22 Vented + S
			⬅	10/08→ 02/15; +PR 1LJ / 1ZA		**24.0125-0158.1** **24.0325-0158.1**	**425158** **525158**	Ø 312 Brake Disc Thickness [mm] 25 Minimum thickness [mm] 22 Vented + S Ø 312 Brake Disc Thickness [mm] 25 Minimum thickness [mm] 22 Vented + S
			➡	10/08→ 02/15; +PR 1KS		**24.0110-0356.1**	**410356**	Ø 272 Brake Disc Thickness [mm] 9.7 Minimum thickness [mm] 8 + S
			➡	10/08→ 02/15; +PR 2EA		**24.0122-0219.1**	**422219**	Ø 310 Brake Disc Thickness [mm] 22 Minimum thickness [mm] 20 Vented
Slave Cylinder, clutch								
1.4 TSI 1.8 TSI 2.0 TDI	92 118 125	07/08→05/15 03/08→05/15 07/08→05/15		08/08→ 02/15; +PR 0EM		**24.2519-1706.3**	**040096**	Ø 19
1.6 TDI 1.8 TSI 1.8 TSI 4x4 2.0 TDI 16V 2.0 TDI 16V 4x4 2.0 TFSI 3.6 FSI 4x4	77 112 112 - 118 103 103 147 191	09/10→05/15 03/09→05/15 11/08→05/15 01/09→05/15 11/10→05/15 05/10→05/15 11/08→05/15		→ 02/15; +PR 0EM		**24.2519-1706.3**	**040096**	Ø 19
1.9 TDI 2.0 TDI	77 103	03/08→11/10 03/08→05/10		08/08→; +PR 0EM		**24.2519-1706.3**	**040096**	Ø 19
2.0 TDI 4x4	125	09/08→05/15		10/08→ 02/15; +PR 0EM		**24.2519-1706.3**	**040096**	Ø 19
SKODA - SUPERB II Estate (3T5) 10/09→05/15								
Guide Bolt, brake caliper								
1.4 TSI 1.8 TSI 1.8 TSI 4x4 2.0 TDI 2.0 TDI 16V 2.0 TDI 4x4 3.6 V6 4x4	92 112 - 118 112 - 118 125 103 125 191	10/09→05/15 10/09→05/15 10/09→05/15 10/09→05/15 10/09→05/15 10/09→05/15 10/09→05/15		11/09→ 02/15; +PR 1ZE	2	**11.8171-0008.1**	**990049**	ATE
				11/09→ 02/15; +PR 1LJ / 1ZA	2	**11.8171-0008.1**	**990049**	ATE
				11/09→ 02/15; +PR 1LK	2	**11.8171-0008.1**	**990049**	ATE
1.6 TDI 2.0 TDI 16V 4x4 2.0 TFSI	77 103 147	09/10→05/15 11/10→05/15 05/10→05/15		→ 02/15; +PR 1ZE	2	**11.8171-0008.1**	**990049**	ATE
				→ 02/15; +PR 1LJ / 1ZA	2	**11.8171-0008.1**	**990049**	ATE
				→ 02/15; +PR 1LK	2	**11.8171-0008.1**	**990049**	ATE
1.9 TDI	77	10/09→11/10		+PR 1LJ / 1ZA	2	**11.8171-0008.1**	**990049**	ATE
				+PR 1LK	2	**11.8171-0008.1**	**990049**	ATE
				+PR 1ZE	2	**11.8171-0008.1**	**990049**	ATE
2.0 TDI	103	10/09→03/10		11/09→; +PR 1LK	2	**11.8171-0008.1**	**990049**	ATE
				11/09→; +PR 1ZE	2	**11.8171-0008.1**	**990049**	ATE
				11/09→; +PR 1LJ / 1ZA	2	**11.8171-0008.1**	**990049**	ATE
Brake Disc								
1.4 TSI 1.8 TSI 2.0 TDI 2.0 TDI 16V	92 112 - 118 125 103	10/09→05/15 10/09→05/15 10/09→05/15 10/09→05/15	⬅	11/09→ 02/15; +PR 1ZE		**24.0125-0145.1**	**425145**	Ø 288 Brake Disc Thickness [mm] 25 Minimum thickness [mm] 22 Vented + S
			⬅	11/09→ 02/15; +PR 1LJ / 1ZA		**24.0125-0158.1** **24.0325-0158.1**	**425158** **525158**	Ø 312 Brake Disc Thickness [mm] 25 Minimum thickness [mm] 22 Vented + S Ø 312 Brake Disc Thickness [mm] 25 Minimum thickness [mm] 22 Vented + S

© 2022 Continental Aftermarket & Services GmbH

SKODA - SUPERB II Estate (3T5) 10/09→05/15

Brake Disc

	kW				! #			
1.4 TSI 1.8 TSI 2.0 TDI 2.0 TDI 16V	92 112 - 118 125 103	10/09→05/15 10/09→05/15 10/09→05/15 10/09→05/15	➡	11/09→ 02/15; +PR 1KS		**24.0110-0356.1**	**410356**	Ø 272 Brake Disc Thickness [mm] 9.7 Minimum thickness [mm] 8 + S
1.6 TDI 2.0 TFSI	77 147	09/10→05/15 05/10→05/15	⬅	→ 02/15; +PR 1ZE		**24.0125-0145.1**	**425145**	Ø 288 Brake Disc Thickness [mm] 25 Minimum thickness [mm] 22 Vented + S
			⬅	→ 02/15; +PR 1LJ / 1ZA		**24.0125-0158.1** **24.0325-0158.1**	**425158** **525158**	Ø 312 Brake Disc Thickness [mm] 25 Minimum thickness [mm] 22 Vented + S Ø 312 Brake Disc Thickness [mm] 25 Minimum thickness [mm] 22 Vented + S
			➡	→ 02/15; +PR 1KS		**24.0110-0356.1**	**410356**	Ø 272 Brake Disc Thickness [mm] 9.7 Minimum thickness [mm] 8 + S
1.8 TSI 4x4 2.0 TDI 4x4 3.6 V6 4x4	112 - 118 125 191	10/09→05/15 10/09→05/15 10/09→05/15	⬅	11/09→ 02/15; +PR 1ZE		**24.0125-0145.1**	**425145**	Ø 288 Brake Disc Thickness [mm] 25 Minimum thickness [mm] 22 Vented + S
			⬅	11/09→ 02/15; +PR 1LJ / 1ZA		**24.0125-0158.1** **24.0325-0158.1**	**425158** **525158**	Ø 312 Brake Disc Thickness [mm] 25 Minimum thickness [mm] 22 Vented + S Ø 312 Brake Disc Thickness [mm] 25 Minimum thickness [mm] 22 Vented + S
			➡	11/09→ 02/15; +PR 1KS		**24.0110-0356.1**	**410356**	Ø 272 Brake Disc Thickness [mm] 9.7 Minimum thickness [mm] 8 + S
			➡	11/09→ 02/15; +PR 2EA		**24.0122-0219.1**	**422219**	Ø 310 Brake Disc Thickness [mm] 22 Minimum thickness [mm] 20 Vented
1.9 TDI	77	10/09→11/10	⬅	+PR 1ZE		**24.0125-0145.1**	**425145**	Ø 288 Brake Disc Thickness [mm] 25 Minimum thickness [mm] 22 Vented + S
			⬅	+PR 1LJ / 1ZA		**24.0125-0158.1** **24.0325-0158.1**	**425158** **525158**	Ø 312 Brake Disc Thickness [mm] 25 Minimum thickness [mm] 22 Vented + S Ø 312 Brake Disc Thickness [mm] 25 Minimum thickness [mm] 22 Vented + S
			➡	+PR 1KS		**24.0110-0356.1**	**410356**	Ø 272 Brake Disc Thickness [mm] 9.7 Minimum thickness [mm] 8 + S
2.0 TDI	103	10/09→03/10	⬅	11/09→; +PR 1ZE		**24.0125-0145.1**	**425145**	Ø 288 Brake Disc Thickness [mm] 25 Minimum thickness [mm] 22 Vented + S
			⬅	11/09→; +PR 1LJ / 1ZA		**24.0125-0158.1** **24.0325-0158.1**	**425158** **525158**	Ø 312 Brake Disc Thickness [mm] 25 Minimum thickness [mm] 22 Vented + S Ø 312 Brake Disc Thickness [mm] 25 Minimum thickness [mm] 22 Vented + S
			➡	11/09→; +PR 1KS		**24.0110-0356.1**	**410356**	Ø 272 Brake Disc Thickness [mm] 9.7 Minimum thickness [mm] 8 + S
2.0 TDI 16V 4x4	103	11/10→05/15	⬅	→ 02/15; +PR 1ZE		**24.0125-0145.1**	**425145**	Ø 288 Brake Disc Thickness [mm] 25 Minimum thickness [mm] 22 Vented + S
			⬅	→ 02/15; +PR 1LJ / 1ZA		**24.0125-0158.1**	**425158**	Ø 312 Brake Disc Thickness [mm] 25 Minimum thickness [mm] 22 Vented + S

	kW				! #			
SKODA - SUPERB II Estate (3T5) 10/09→05/15								
Brake Disc								
2.0 TDI 16V 4x4	103	11/10→05/15	←	→ 02/15; +PR 1LJ / 1ZA		**24.0325-0158.1**	**525158**	Ø 312 Brake Disc Thickness [mm] 25 Minimum thickness [mm] 22 Vented + S
			→	→ 02/15; +PR 1KS		**24.0110-0356.1**	**410356**	Ø 272 Brake Disc Thickness [mm] 9.7 Minimum thickness [mm] 8 + S
			→	→ 02/15; +PR 2EA		**24.0122-0219.1**	**422219**	Ø 310 Brake Disc Thickness [mm] 22 Minimum thickness [mm] 20 Vented
Slave Cylinder, clutch								
1.4 TSI 1.8 TSI 1.8 TSI 4x4 2.0 TDI 2.0 TDI 16V 2.0 TDI 4x4 3.6 V6 4x4	92 112 - 118 112 - 118 125 103 125 191	10/09→05/15 10/09→05/15 10/09→05/15 10/09→05/15 10/09→05/15 10/09→05/15 10/09→05/15		11/09→ 02/15; +PR 0EM		**24.2519-1706.3**	**040096**	Ø 19
1.6 TDI 2.0 TDI 16V 4x4 2.0 TFSI	77 103 147	09/10→05/15 11/10→05/15 05/10→05/15		→ 02/15; +PR 0EM		**24.2519-1706.3**	**040096**	Ø 19
1.9 TDI	77	10/09→11/10		+PR 0EM		**24.2519-1706.3**	**040096**	Ø 19
2.0 TDI	103	10/09→03/10		11/09→; +PR 0EM		**24.2519-1706.3**	**040096**	Ø 19
SKODA - SUPERB III (3V3) 03/15→								
Brake Master Cylinder								
1.4 TSI 1.4 TSI 4x4 1.5 TSI 1.6 TDI 1.8 TSI 2.0 TDI 2.0 TDI 4x4 2.0 TSI 2.0 TSI 4x4	92 - 110 110 110 88 132 110 - 147 110 - 147 162 200 - 206	03/15→ 03/15→ 02/17→ 03/15→ 03/15→ 03/15→ 03/15→ 03/15→ 03/15→		for left-hand drive vehicles		**24.4123-1719.3**	**011017**	TRW Ø 23.8 without brake fluid reservoir
Brake Caliper								
1.4 TSI	92 - 110	03/15→	←	+PR 1ZA / 1ZK; ◪		**24.3571-1801.5**	**241387**	without holder
1.4 TSI 4x4	110	03/15→	←	+PR 1ZA / 1ZK; ◪		**24.3571-1802.5**	**241388**	without holder
1.4 TSI iV	115 - 160	08/19→	←	+PR 1LA; ◪		**24.3601-1727.5**	**240786**	TRW without holder
1.5 TSI	110	02/17→	←	+PR 1LA; ◪		**24.3601-1728.5**	**240787**	TRW without holder
1.6 TDI 1.8 TSI 2.0 TDI	88 132 90 - 147	03/15→ 03/15→ 03/15→	→	+PR 1KZ / 2ER; ◪		**24.6242-7001.5**	**241335**	ATE + EMot / without holder + eFSB
2.0 TDI 4x4	110 - 147	03/15→	→	+PR 1KZ / 2ER; ◪		**24.6242-7002.5**	**241336**	ATE + EMot / without holder + eFSB
2.0 TSI	140 - 162	03/15→	→	+PR 1KU / 2EM; ◪		**24.6242-7005.5**	**241337**	ATE + EMot / without holder + eFSB
2.0 TSI 4x4	200 - 206	03/15→	→	+PR 1KU / 2EM; ◪		**24.6242-7006.5**	**241338**	ATE + EMot / without holder + eFSB
Brake Pad Set, disc brake								
1.4 TSI 1.4 TSI 4x4	92 - 110 110	03/15→ 03/15→	←	+PR 1LA		**13.0460-2617.2** **13.0470-2617.2**	**602617** **LD2617**	TRW + WK TRW + WK Ceramic
1.4 TSI iV 1.5 TSI	115 - 160 110	08/19→ 02/17→	←	+PR 1ZA / 1ZK		**13.0460-2785.2** **13.0470-2785.2**	**602785** **LD2785**	TRW 25683 20,4 + WE / + WK TRW 25683 20,4 + WE / + WK Ceramic
1.6 TDI 1.8 TSI 2.0 TDI 2.0 TDI 4x4 2.0 TSI 2.0 TSI 4x4	88 132 90 - 147 110 - 147 140 - 162 200 - 206	03/15→ 03/15→ 03/15→ 03/15→ 03/15→ 03/15→	→	+PR 1KU / 1KZ / 2EM / 2ER; + eFSB		**13.0460-7294.2** **13.0470-7294.2**	**607294** **LD7294**	ATE 25009 16,4 - WE / - WK ATE 25009 16,4 - WE / - WK Ceramic

© 2022 Continental Aftermarket & Services GmbH

SKODA - SUPERB III (3V3) 03/15→

	kW				! #			
Warning Contact, brake pad wear								
1.4 TSI	92 - 110	03/15→	←	+PR 1ZA / 1ZK	1	**24.8190-0065.2**	**620065**	
1.4 TSI 4x4 1.4 TSI iV	110 115 - 160	03/15→ 08/19→	←	+PR 1LA	1	**24.8190-0065.2**	**620065**	
1.5 TSI	110	02/17→						
1.6 TDI	88	03/15→						
1.8 TSI	132	03/15→						
2.0 TDI	90 - 147	03/15→						
2.0 TDI 4x4	110 - 147	03/15→						
2.0 TSI	140 - 162	03/15→						
2.0 TSI 4x4	200 - 206	03/15→						
Brake Disc								
1.4 TSI	92 - 110	03/15→	←	+PR 1ZA / 1ZK		**24.0125-0158.1**	**425158**	Ø 312 Brake Disc Thickness [mm] 25 Minimum thickness [mm] 22 Vented + S
1.4 TSI 4x4 1.4 TSI iV	110 115 - 160	03/15→ 08/19→						
1.5 TSI	110	02/17→	←	+PR 1LA		**24.0130-0225.1**	**430225**	Ø 340 Brake Disc Thickness [mm] 30 Minimum thickness [mm] 27 Vented + S
1.6 TDI	88	03/15→						
1.8 TSI	132	03/15→						
2.0 TDI	90 - 147	03/15→	→	+PR 1KU / 2EM; + eFSB		**24.0112-0210.1**	**412210**	Ø 300 Brake Disc Thickness [mm] 12 Minimum thickness [mm] 10 + S
2.0 TDI 4x4	110 - 147	03/15→						
2.0 TSI	140 - 162	03/15→	→	+PR 1KZ / 2ER		**24.0122-0219.1**	**422219**	Ø 310 Brake Disc Thickness [mm] 22 Minimum thickness [mm] 20 Vented
2.0 TSI 4x4	200 - 206	03/15→						
Sensor, wheel speed								
1.4 TSI	92 - 110	03/15→	←	◪		**24.0711-5273.3**	**360303**	
1.4 TSI iV	115 - 160	08/19→	←	◪		**24.0711-5274.3**	**360304**	
1.5 TSI	110	02/17→	→	for cruise control system	2	**24.0711-6337.3**	**360390**	
1.6 TDI	88	03/15→	→	for vehicles with parking assistant system	2	**24.0711-6337.3**	**360390**	
1.8 TSI	132	03/15→						
2.0 TDI	90 - 147	03/15→						
2.0 TSI	140 - 162	03/15→						
1.4 TSI 4x4	110	03/15→	←	◪		**24.0711-5273.3**	**360303**	
2.0 TDI 4x4	110 - 147	03/15→	←	◪		**24.0711-5274.3**	**360304**	
2.0 TSI 4x4	200 - 206	03/15→	→	for vehicles with parking assistant system; ◪		**24.0711-5401.3**	**360330**	
			→	for cruise control system; ◪		**24.0711-5401.3**	**360330**	
			→	for cruise control system; ◪		**24.0711-5402.3**	**360331**	
			→	for vehicles with parking assistant system; ◪		**24.0711-5402.3**	**360331**	
Slave Cylinder, clutch								
1.4 TSI	92 - 110	03/15→		+PR 0EC / 0EN		**24.2519-1706.3**	**040096**	Ø 19
1.4 TSI 4x4	110	03/15→						
1.4 TSI iV	115 - 160	08/19→						
1.5 TSI	110	02/17→						
1.6 TDI	88	03/15→						
1.8 TSI	132	03/15→						
2.0 TDI	90 - 147	03/15→						
2.0 TDI 4x4	110 - 147	03/15→						
2.0 TSI	140 - 162	03/15→						
2.0 TSI 4x4	200 - 206	03/15→						
2.0 TDI	140	03/15→		08/15→; +PR 0EC / 0EN		**24.2519-1706.3**	**040096**	Ø 19
Control Element, parking brake caliper								
1.4 TSI	92 - 110	03/15→	→	+PR 1KU / 1KZ / 2EM / 2ER; ◪		**11.9282-1001.3**	**250159**	ATE
1.4 TSI 4x4	110	03/15→	→	+PR 1KU / 1KZ / 2EM / 2ER; ◪		**11.9282-1002.3**	**250160**	ATE

	kW				! #			
SKODA - SUPERB III (3V3) 03/15→								
Control Element, parking brake caliper								
1.4 TSI iV	115 - 160	08/19→	➡	+PR 1KU / 1KZ / 2EM / 2ER;		**11.9282-1001.3**	**250159**	ATE
1.5 TSI	110	02/17→	➡	+PR 1KU / 1KZ / 2EM / 2ER;		**11.9282-1002.3**	**250160**	ATE
1.6 TDI	88	03/15→						
1.8 TSI	132	03/15→						
2.0 TDI	90 - 147	03/15→						
2.0 TDI 4x4	110 - 147	03/15→						
2.0 TSI	140 - 162	03/15→						
2.0 TSI 4x4	200 - 206	03/15→						
SKODA - SUPERB III Estate (3V5) 03/15→								
Brake Master Cylinder								
1.4 TSI	92 - 110	03/15→		for left-hand drive vehicles		**24.4123-1719.3**	**011017**	TRW Ø 23.8 without brake fluid reservoir
1.4 TSI 4x4	110	03/15→						
1.5 TSi	110	02/17→						
1.6 TDI	88	03/15→						
1.8 TSI	132	03/15→						
2.0 TDI	110 - 147	03/15→						
2.0 TDI 4x4	110 - 147	03/15→						
2.0 TSI	162	03/15→						
2.0 TSI 4x4	200 - 206	03/15→						
Brake Caliper								
1.4 TSI	92 - 110	03/15→	⬅	+PR 1ZA / 1ZK;		**24.3571-1801.5**	**241387**	without holder
1.4 TSI 4x4	110	03/15→	⬅	+PR 1ZA / 1ZK;		**24.3571-1802.5**	**241388**	without holder
1.4 TSI iV	115 - 160	08/19→	⬅	+PR 1LA;		**24.3601-1727.5**	**240786**	TRW without holder
1.5 TSi	110	02/17→	⬅	+PR 1LA;		**24.3601-1728.5**	**240787**	TRW without holder
1.6 TDI	88	03/15→	➡	+PR 1KZ / 2ER;		**24.6242-7001.5**	**241335**	ATE + EMot / without holder + eFSB
1.8 TSI	132	03/15→						
2.0 TDI	90 - 147	03/15→	➡	+PR 1KZ / 2ER;		**24.6242-7002.5**	**241336**	ATE + EMot / without holder + eFSB
2.0 TDI 4x4	110 - 147	03/15→						
2.0 TSI	140 - 162	03/15→	➡	+PR 1KU / 2EM;		**24.6242-7005.5**	**241337**	ATE + EMot / without holder + eFSB
2.0 TSI 4x4	200 - 206	03/15→	➡	+PR 1KU / 2EM;		**24.6242-7006.5**	**241338**	ATE + EMot / without holder + eFSB
Brake Pad Set, disc brake								
1.4 TSI	92 - 110	03/15→	⬅	+PR 1LA		**13.0460-2617.2** **13.0470-2617.2**	**602617** **LD2617**	TRW + WK TRW + WK Ceramic
1.4 TSI 4x4	110	03/15→						
1.4 TSI iV	115 - 160	08/19→	⬅	+PR 1ZA / 1ZK		**13.0460-2785.2** **13.0470-2785.2**	**602785** **LD2785**	TRW 25683 20,4 + WE / + WK TRW 25683 20,4 + WE / + WK Ceramic
1.5 TSi	110	02/17→						
1.6 TDI	88	03/15→	➡	+PR 1KU / 1KZ / 2EM / 2ER; + eFSB		**13.0460-7294.2** **13.0470-7294.2**	**607294** **LD7294**	ATE 25009 16,4 - WE / - WK ATE 25009 16,4 - WE / - WK Ceramic
1.8 TSI	132	03/15→						
2.0 TDI	90 - 147	03/15→						
2.0 TDI 4x4	110 - 147	03/15→						
2.0 TSI	140 - 162	03/15→						
2.0 TSI 4x4	200 - 206	03/15→						
Warning Contact, brake pad wear								
1.4 TSI	92 - 110	03/15→	⬅	+PR 1ZA / 1ZK	1	**24.8190-0065.2**	**620065**	
1.4 TSI 4x4	110	03/15→	⬅	+PR 1LA	1	**24.8190-0065.2**	**620065**	
1.4 TSI iV	115 - 160	08/19→						
1.5 TSi	110	02/17→						
1.6 TDI	88	03/15→						
1.8 TSI	132	03/15→						
2.0 TDI	90 - 147	03/15→						
2.0 TDI 4x4	110 - 147	03/15→						
2.0 TSI	140 - 162	03/15→						

© 2022 Continental Aftermarket & Services GmbH

SKODA - SUPERB III Estate (3V5) 03/15→

	kW				! #			
Warning Contact, brake pad wear								
2.0 TSI 4x4	200 - 206	03/15→	←	+PR 1ZA / 1ZK	1	**24.8190-0065.2**	**620065**	
			←	+PR 1LA	1	**24.8190-0065.2**	**620065**	
Brake Disc								
1.4 TSI 1.4 TSI 4x4 1.6 TDI 1.8 TSI 2.0 TDI 2.0 TDI 4x4 2.0 TSI 2.0 TSI 4x4	92 - 110 110 88 132 110 - 140 110 - 140 162 200 - 206	03/15→ 03/15→ 03/15→ 03/15→ 03/15→ 03/15→ 03/15→ 03/15→	←	+PR 1ZA / 1ZK		**24.0125-0158.1**	**425158**	Ø 312 Brake Disc Thickness [mm] 25 Minimum thickness [mm] 22 Vented + S
			←	+PR 1LA		**24.0130-0225.1**	**430225**	Ø 340 Brake Disc Thickness [mm] 30 Minimum thickness [mm] 27 Vented + S
			→	+PR 1KU / 2EM; + eFSB		**24.0112-0210.1**	**412210**	Ø 300 Brake Disc Thickness [mm] 12 Minimum thickness [mm] 10 + S
			→	+PR 1KZ / 2ER; + eFSB		**24.0122-0219.1**	**422219**	Ø 310 Brake Disc Thickness [mm] 22 Minimum thickness [mm] 20 Vented
1.4 TSI iV 1.5 TSi 2.0 TDI 2.0 TDI 4x4 2.0 TSI	115 - 160 110 90 - 147 147 140	08/19→ 02/17→ 07/20→ 09/20→ 07/19→	←	+PR 1ZA / 1ZK		**24.0125-0158.1**	**425158**	Ø 312 Brake Disc Thickness [mm] 25 Minimum thickness [mm] 22 Vented + S
			←	+PR 1LA		**24.0130-0225.1**	**430225**	Ø 340 Brake Disc Thickness [mm] 30 Minimum thickness [mm] 27 Vented + S
			→	+PR 1KU / 2EM; + eFSB		**24.0112-0210.1**	**412210**	Ø 300 Brake Disc Thickness [mm] 12 Minimum thickness [mm] 10 + S
			→	+PR 1KZ / 2ER		**24.0122-0219.1**	**422219**	Ø 310 Brake Disc Thickness [mm] 22 Minimum thickness [mm] 20 Vented
Sensor, wheel speed								
1.4 TSI 1.4 TSI iV 1.5 TSi 1.6 TDI 1.8 TSI 2.0 TDI 2.0 TSI	92 - 110 115 - 160 110 88 132 90 - 147 140 - 162	03/15→ 08/19→ 02/17→ 03/15→ 03/15→ 03/15→ 03/15→	←	◪		**24.0711-5273.3**	**360303**	
			←	◩		**24.0711-5274.3**	**360304**	
			→	for cruise control system	2	**24.0711-6337.3**	**360390**	
			→	for vehicles with parking assistant system	2	**24.0711-6337.3**	**360390**	
1.4 TSI 4x4	110	03/15→	←	◪		**24.0711-5273.3**	**360303**	
			←	◩		**24.0711-5274.3**	**360304**	
			→	for cruise control system; ◪		**24.0711-5401.3**	**360330**	
			→	for vehicles with parking assistant system; for cruise control system; ◪		**24.0711-5401.3**	**360330**	
			→	for cruise control system; ◩		**24.0711-5402.3**	**360331**	
			→	for vehicles with parking assistant system; ◩		**24.0711-5402.3**	**360331**	
2.0 TDI 4x4 2.0 TSI 4x4	110 - 147 200 - 206	03/15→ 03/15→	←	◪		**24.0711-5273.3**	**360303**	
			←	◩		**24.0711-5274.3**	**360304**	
			→	for vehicles with parking assistant system; ◪		**24.0711-5401.3**	**360330**	
			→	for cruise control system; ◪		**24.0711-5401.3**	**360330**	
			→	for cruise control system; ◩		**24.0711-5402.3**	**360331**	
			→	for vehicles with parking assistant system; ◩		**24.0711-5402.3**	**360331**	
Slave Cylinder, clutch								
1.4 TSI 1.4 TSI 4x4 1.4 TSI iV 1.5 TSi 1.6 TDI 1.8 TSI	92 - 110 110 115 - 160 110 88 132	03/15→ 03/15→ 08/19→ 02/17→ 03/15→ 03/15→		+PR 0EC / 0EN		**24.2519-1706.3**	**040096**	Ø 19

	kW				! #			
SKODA - SUPERB III Estate (3V5) 03/15→								
Slave Cylinder, clutch								
2.0 TDI	90 - 147	03/15→		+PR 0EC / 0EN		**24.2519-1706.3**	**040096**	Ø 19
2.0 TDI 4x4	110 - 147	03/15→						
2.0 TSI	140 - 162	03/15→						
2.0 TSI 4x4	200 - 206	03/15→						
Control Element, parking brake caliper								
1.4 TSI	92 - 110	03/15→	➡	+PR 1KU / 1KZ / 2EM / 2ER;		**11.9282-1001.3**	**250159**	ATE
1.4 TSI 4x4	110	03/15→	➡	+PR 1KU / 1KZ / 2EM / 2ER;		**11.9282-1002.3**	**250160**	ATE
1.4 TSI iV	115 - 160	08/19→						
1.5 TSi	110	02/17→						
1.6 TDI	88	03/15→						
1.8 TSI	132	03/15→						
2.0 TDI	90 - 147	03/15→						
2.0 TDI 4x4	110 - 147	03/15→						
2.0 TSI	140 - 162	03/15→						
2.0 TSI 4x4	200 - 206	03/15→						
SKODA - YETI (5L) 05/09→12/17								
Guide Bolt, brake caliper								
1.2 TSI	77 - 81	09/09→12/17		+PR 1ZA / 1ZE	2	**11.8171-0008.1**	**990049**	ATE
1.4 TSI	90 - 92	06/10→12/17						
1.4 TSI 4x4	110	05/15→12/17						
1.6	81	04/14→12/17						
1.6 TDI	77	11/10→05/15						
1.8 TSI 4x4	112 - 118	05/09→12/17						
2.0 TDI	81 - 110	11/09→12/17						
2.0 TDI 4x4	81 - 125	05/09→12/17						
Brake Disc								
1.2 TSI 1.8 TSI 4x4	77 118	09/09→05/15 05/09→12/17	⬅	+PR 1ZE		**24.0125-0145.1**	**425145**	Ø 288 Brake Disc Thickness [mm] 25 Minimum thickness [mm] 22 Vented + S
			⬅	+PR 1ZA		**24.0125-0158.1** **24.0325-0158.1**	**425158** **525158**	Ø 312 Brake Disc Thickness [mm] 25 Minimum thickness [mm] 22 Vented + S Ø 312 Brake Disc Thickness [mm] 25 Minimum thickness [mm] 22 Vented + S
			➡	11/09→; +PR 1KS		**24.0110-0356.1**	**410356**	Ø 272 Brake Disc Thickness [mm] 9.7 Minimum thickness [mm] 8 + S
1.2 TSI 1.4 TSI	81 90 - 92	05/15→12/17 06/10→12/17	⬅	+PR 1ZE		**24.0125-0145.1**	**425145**	Ø 288 Brake Disc Thickness [mm] 25 Minimum thickness [mm] 22 Vented + S
1.4 TSI 4x4	110	05/15→12/17						
1.6 TDI	77	11/10→05/15	⬅	+PR 1ZA		**24.0125-0158.1** **24.0325-0158.1**	**425158** **525158**	Ø 312 Brake Disc Thickness [mm] 25 Minimum thickness [mm] 22 Vented + S Ø 312 Brake Disc Thickness [mm] 25 Minimum thickness [mm] 22 Vented + S
1.8 TSI 4x4	112	11/09→12/17						
2.0 TDI	81 - 110	11/09→12/17						
2.0 TDI 4x4	81 - 125	11/09→12/17						
			➡	+PR 1KS		**24.0110-0356.1**	**410356**	Ø 272 Brake Disc Thickness [mm] 9.7 Minimum thickness [mm] 8 + S
1.6	81	04/14→12/17	⬅	+PR 1ZE		**24.0125-0145.1**	**425145**	Ø 288 Brake Disc Thickness [mm] 25 Minimum thickness [mm] 22 Vented + S

© 2022 Continental Aftermarket & Services GmbH

	kW				! #			
SKODA - YETI (5L) 05/09→12/17								
Brake Disc								
1.6	81	04/14→12/17	←	+PR 1ZA		**24.0125-0158.1**	**425158**	Ø 312 Brake Disc Thickness [mm] 25 Minimum thickness [mm] 22 Vented + S
			→	+PR 1KS		**24.0110-0356.1**	**410356**	Ø 272 Brake Disc Thickness [mm] 9.7 Minimum thickness [mm] 8 + S
2.0 TDI 4x4	103	05/09→12/17	←	+PR 1ZE		**24.0125-0145.1**	**425145**	Ø 288 Brake Disc Thickness [mm] 25 Minimum thickness [mm] 22 Vented + S
			←	+PR 1ZA		**24.0125-0158.1** **24.0325-0158.1**	**425158** **525158**	Ø 312 Brake Disc Thickness [mm] 25 Minimum thickness [mm] 22 Vented + S Ø 312 Brake Disc Thickness [mm] 25 Minimum thickness [mm] 22 Vented + S
			←	05/15→; +PR 1ZA		**24.0125-0158.1** **24.0325-0158.1**	**425158** **525158**	Ø 312 Brake Disc Thickness [mm] 25 Minimum thickness [mm] 22 Vented + S Ø 312 Brake Disc Thickness [mm] 25 Minimum thickness [mm] 22 Vented + S
			→	11/09→; +PR 1KS		**24.0110-0356.1**	**410356**	Ø 272 Brake Disc Thickness [mm] 9.7 Minimum thickness [mm] 8 + S
2.0 TDI 4x4	110	05/15→12/17	←	+PR 1ZE		**24.0125-0145.1**	**425145**	Ø 288 Brake Disc Thickness [mm] 25 Minimum thickness [mm] 22 Vented + S
			→	+PR 1KS		**24.0110-0356.1**	**410356**	Ø 272 Brake Disc Thickness [mm] 9.7 Minimum thickness [mm] 8 + S
Slave Cylinder, clutch								
1.2 TSI	77 - 81	09/09→12/17		+PR 0EM		**24.2519-1706.3**	**040096**	Ø 19
1.4 TSI	90 - 92	06/10→12/17						
1.4 TSI 4x4	110	05/15→12/17						
1.6	81	04/14→12/17						
1.6 TDI	77	11/10→05/15						
1.8 TSI 4x4	112 - 118	05/09→12/17						
2.0 TDI	81 - 110	11/09→12/17						
2.0 TDI 4x4	81 - 125	05/09→12/17						
SMART - FORFOUR Hatchback (453) 07/14→								
Accessory Kit, brake shoes								
0.9 0.9 Brabus electric drive / EQ electric drive	66 80 41 60	11/14→ 07/16→ 05/17→ 05/17→	→			**03.0137-9309.2**	**669309**	AP
1.0	45	11/14→	→	01/15→		**03.0137-9309.2**	**669309**	AP
1.0	52	07/14→	→	11/14→		**03.0137-9309.2**	**669309**	AP
SMART - FORTWO Convertible (453) 09/15→								
Accessory Kit, brake shoes								
0.9 0.9 Brabus 1.0 electric drive / EQ electric drive	66 80 52 41 60	09/15→ 07/16→ 09/15→ 05/17→ 05/17→	→			**03.0137-9317.2**	**669317**	
SMART - FORTWO Coupe (453) 07/14→								
Accessory Kit, brake shoes								
0.9 1.0	66 52	09/14→ 07/14→	→	11/14→		**03.0137-9317.2**	**669317**	
0.9 Brabus electric drive / EQ	80 41	07/16→ 05/17→	→			**03.0137-9317.2**	**669317**	

	kW				! #			
SMART - FORTWO Coupe (453) 07/14→								
Accessory Kit, brake shoes								
electric drive	60	05/17→				**03.0137-9317.2**	**669317**	
1.0	45	11/14→		01/15→		**03.0137-9317.2**	**669317**	
SSANGYONG - RODIUS I 05/05→								
Brake Pad Set, disc brake								
2.7 Xdi	120 - 121	05/05→				**13.0460-5798.2**	**605798**	MAN + WK
2.7 Xdi 4WD	120 - 121	05/05→						
3.2	162	05/05→						
3.2 4WD	162	07/07→						
SSANGYONG - RODIUS II 06/13→								
Brake Pad Set, disc brake								
2.0 Xdi	114	07/13→				**13.0460-5798.2**	**605798**	MAN + WK
2.0 XDi	110	06/13→						
2.0 Xdi 4WD	114	07/13→						
2.2 Xdi	131	07/15→						
2.2 Xdi 4WD	131	07/15→						
3.2	162	07/13→						
3.2 4WD	162	07/13→						
SSANGYONG - RODIUS II VAN (CA1) 06/13→								
Brake Pad Set, disc brake								
e-XDi	131	07/15→				**13.0460-5798.2**	**605798**	MAN + WK
e-XDi 4WD	131	07/15→						
SSANGYONG - TIVOLI 01/15→								
Brake Pad Set, disc brake								
1.5	120	06/19→				**13.0460-5650.2**	**605650**	AKE 25337 15,5 + WK + Zub
1.6	93 - 94	04/15→						
1.6 All-wheel Drive	93	04/15→						
1.6 CNG	94	07/18→						
1.6 GPL	94	04/15→						
1.6 XDi 160	83 - 100	04/15→						
1.6 XDi 160 All-wheel Drive	85	04/15→						
SSANGYONG - XLV SUV 04/16→								
Brake Pad Set, disc brake								
1.6 CNG	94	07/18→				**13.0460-5650.2**	**605650**	AKE 25337 15,5 + WK + Zub
1.6 GPL	94	05/16→						
e-XDi 160	85	04/16→						
e-XGi 160	93 - 94	04/16→						
SSANGYONG - XLV VAN 04/16→								
Brake Pad Set, disc brake								
e-XDi	85	12/16→				**13.0460-5650.2**	**605650**	AKE 25337 15,5 + WK + Zub
e-XGi	94	12/16→						
SUBARU - JUSTY IV 01/07→								
Accessory Kit, brake shoes								
1.0	51	01/07→		09/07→ 05/11		**03.0137-9353.2**	**669353**	
1.0 BiFuel	51	09/07→03/12		→ 05/11		**03.0137-9353.2**	**669353**	
1.3 AWD	67	03/08→						
SUZUKI - BALENO (FW, EW) 02/16→								
Wheel Brake Cylinder								
1.0	82	02/16→			2	**24.3219-1772.3**	**020608**	ALU
1.2	66	02/16→						
1.2 Hybrid	66	02/16→						
SUZUKI - IGNIS III (MF) 10/16→								
Wheel Brake Cylinder								
1.2	66	10/16→			2	**24.3219-1769.3**	**020610**	ALU
1.2 AllGrip	66	10/16→						
1.2 Hybrid	61 - 66	10/16→						

© 2022 Continental Aftermarket & Services GmbH

	kW				! #			
SUZUKI - IGNIS III (MF) 10/16→								
Wheel Brake Cylinder								
1.2 Hybrid AllGrip	61 - 66	10/16→	➡		2	**24.3219-1769.3**	**020610**	ALU
SUZUKI - KIZASHI (FR) 10/10→								
Brake Pad Set, disc brake								
2.4 2.4 4x4 2.4 LPG 4x4	131 131 131	10/10→ 10/10→ 01/14→12/14	➡			**13.0460-5929.2**	**605929**	AKE 21719 15,0 + WK
SUZUKI - SWIFT III (MZ, EZ) 02/05→								
Brake Pad Set, disc brake								
1.6	92	05/06→	➡			**13.0460-5929.2**	**605929**	AKE 21719 15,0 + WK
SUZUKI - SWIFT IV (FZ, NZ) 10/10→								
Wheel Brake Cylinder								
1.2 1.2 4WD 1.2 4x4 1.3 DDiS 1.4 1.6	63 - 69 67 66 - 69 55 70 100	10/10→ 08/12→ 10/10→ 10/10→ 02/11→ 01/12→	➡		2	**24.3219-1769.3**	**020610**	ALU
SUZUKI - SWIFT V (AZ) 01/17→								
Wheel Brake Cylinder								
1.0 1.0 SHVS 1.2 1.2 AllGrip 1.2 SHVS 1.2 SHVS AllGrip	82 82 66 - 67 66 66 66	04/17→ 04/17→ 01/17→ 04/17→ 04/17→ 04/17→	➡	GL/GLA	2	**24.3219-1769.3**	**020610**	ALU
1.2 Hybrid) 1.2 Hybrid) AllGrip	61 61	06/20→ 06/20→	➡		2	**24.3219-1769.3**	**020610**	ALU
SUZUKI - SX4 (EY, GY) 06/06→								
Brake Pad Set, disc brake								
1.5 1.5 VVTi 1.6 VVT 1.6 VVT 4x4	73 81 79 - 88 81 - 88	06/06→07/10 07/07→12/15 06/06→ 07/09→	⬅ ➡	Vehicle Production Country Japan Vehicle Production Country Japan; + ABS		**13.0460-5716.2** **13.0460-5929.2**	**605716** **605929**	21561 17,0 + WK AKE 21719 15,0 + WK
1.5 VVT 1.5 VVT 4x4 1.6 DDIS 1.9 DDiS 1.9 DDiS 4x4	82 82 66 88 88	07/10→ 07/10→ 04/07→ 06/06→ 06/06→	➡	+ ABS		**13.0460-5929.2**	**605929**	AKE 21719 15,0 + WK
1.6 LPG 1.6 VVT 4x4	79 79	06/06→12/12 06/06→	⬅ ➡	Vehicle Production Country Japan + ABS		**13.0460-5716.2** **13.0460-5929.2**	**605716** **605929**	21561 17,0 + WK AKE 21719 15,0 + WK
2.0 16V 4x4 2.0 DDiS 2.0 DDiS 4x4	112 99 99	01/10→ 07/09→ 07/09→	➡	Vehicle Production Country Japan; + ABS		**13.0460-5929.2**	**605929**	AKE 21719 15,0 + WK
2.0 4x4	107	06/06→	⬅ ➡			**13.0460-5716.2** **13.0460-5929.2**	**605716** **605929**	21561 17,0 + WK AKE 21719 15,0 + WK
SUZUKI - SX4 Saloon (GY, RW) 10/07→								
Brake Pad Set, disc brake								
1.6 1.6 AWD	79 - 88 79	10/07→ 10/07→12/11	⬅ ➡	Vehicle Production Country Japan Vehicle Production Country Japan; + ABS		**13.0460-5716.2** **13.0460-5929.2**	**605716** **605929**	21561 17,0 + WK AKE 21719 15,0 + WK
TALBOT - 1307-1510 07/75→04/84								
Guide Bolt, brake caliper								
1510 1.6 Simca 1510 1.6	66 54	07/81→06/82 11/80→12/83	⬅		2	**11.8171-0008.1**	**990049**	ATE
Simca 1510 1.4	51 - 63	01/80→04/84	⬅	09/80→	2	**11.8171-0008.1**	**990049**	ATE

	kW				! #			
TALBOT - SOLARA 02/80→07/86								
Guide Bolt, brake caliper								
1.3	40	02/80→07/86	←	09/80→ 06/82	2	**11.8171-0008.1**	**990049**	ATE
1.6	51 - 66	09/81→07/86	←		2	**11.8171-0008.1**	**990049**	ATE
1.6	65	02/80→06/81	←	09/80→	2	**11.8171-0008.1**	**990049**	ATE
TOYOTA - AVENSIS (_T22_) 09/97→02/03								
Guide Bolt, brake caliper								
1.6 1.8 2.0	74 81 94	09/97→10/00 09/97→10/00 09/97→10/00		→ 09/00; for vehicles with drum brakes on the rear axle	2	**11.8171-0008.1**	**990049**	ATE
1.6 2.0 D	81 61	10/97→06/00 10/97→05/98		for vehicles with drum brakes on the rear axle	2	**11.8171-0008.1**	**990049**	ATE
1.6 VVT-i 1.8 VVT-i 2.0 VVT-i	81 95 110	10/00→02/03 10/00→02/03 10/00→02/03		07/01→; for vehicles with disc brakes on the rear axle	2	**11.8171-0008.1**	**990049**	ATE
2.0 D-4D 2.0 TD	81 66	10/99→02/03 09/97→02/03		07/01→; for vehicles with disc brakes on the rear axle	2	**11.8171-0008.1**	**990049**	ATE
				for vehicles with drum brakes on the rear axle	2	**11.8171-0008.1**	**990049**	ATE
TOYOTA - AVENSIS Estate (_T22_) 09/97→02/03								
Guide Bolt, brake caliper								
1.6 1.8 2.0	74 - 81 81 94	09/97→10/00 09/97→10/00 09/97→10/00		→ 09/00; for vehicles with drum brakes on the rear axle	2	**11.8171-0008.1**	**990049**	ATE
1.6 1.8 2.0	81 95 110	07/00→02/03 10/00→02/03 10/00→02/03		07/01→; for vehicles with disc brakes on the rear axle	2	**11.8171-0008.1**	**990049**	ATE
2.0 D	85	09/02→02/03		for vehicles with disc brakes on the rear axle	2	**11.8171-0008.1**	**990049**	ATE
2.0 D	61	10/97→05/98		for vehicles with drum brakes on the rear axle	2	**11.8171-0008.1**	**990049**	ATE
2.0 D-4D 2.0 TD	81 66	10/99→02/03 09/97→02/03		07/01→; for vehicles with disc brakes on the rear axle	2	**11.8171-0008.1**	**990049**	ATE
				for vehicles with drum brakes on the rear axle	2	**11.8171-0008.1**	**990049**	ATE
TOYOTA - AVENSIS Liftback (_T22_) 09/97→02/03								
Guide Bolt, brake caliper								
1.6 1.8 2.0	74 - 81 81 94	09/97→10/00 09/97→10/00 09/97→10/00		→ 09/00; for vehicles with drum brakes on the rear axle	2	**11.8171-0008.1**	**990049**	ATE
1.6 1.8 2.0	81 95 110	10/00→02/03 10/00→02/03 10/00→02/03		07/01→; for vehicles with disc brakes on the rear axle	2	**11.8171-0008.1**	**990049**	ATE
2.0 D	85	09/02→02/03		for vehicles with disc brakes on the rear axle	2	**11.8171-0008.1**	**990049**	ATE
2.0 D-4D 2.0 TD	81 66	10/99→02/03 09/97→02/03		07/01→; for vehicles with disc brakes on the rear axle	2	**11.8171-0008.1**	**990049**	ATE
				for vehicles with drum brakes on the rear axle	2	**11.8171-0008.1**	**990049**	ATE
TOYOTA - AYGO (_B4_) 05/14→								
Brake Master Cylinder								
1.0	51	05/14→		- ESP		**24.4120-1712.3**	**011092**	Ø 20.6 without brake fluid reservoir
1.0 VVTi	53	03/18→		for left-hand drive vehicles; - ESP		**24.4120-1712.3**	**011092**	Ø 20.6 without brake fluid reservoir
TOYOTA - PROACE CITY Box Body/MPV 10/19→								
Brake Pad Set, disc brake								
1.2 VVT-i 110 1.2 VVT-i 130 1.5 D-4D 100 1.5 D-4D 130 1.5 D-4D 75	81 96 75 96 55	10/19→ 10/19→ 10/19→ 10/19→ 10/19→	← →	 + eFSB		**13.0460-7339.2** **13.0460-3871.2** **13.0470-3871.2**	**607339** **603871** **LD3871**	ATE + WE / - WK BOS 25839 17,8 - WE / - WK + Zub BOS 25839 17,8 - WE / - WK + Zub Ceramic
Electric	100	07/21→	←	for brake disc diameter [mm]: 304		**13.0460-7339.2**	**607339**	ATE + WE / - WK

© 2022 Continental Aftermarket & Services GmbH

	kW				! #			
TOYOTA - PROACE CITY Box Body/MPV 10/19→								
Brake Pad Set, disc brake								
Electric	100	07/21→	➡	+ eFSB		**13.0460-3871.2**	**603871**	BOS 25839 17,8 - WE / - WK + Zub
						13.0470-3871.2	**LD3871**	BOS 25839 17,8 - WE / - WK + Zub Ceramic
TOYOTA - PROACE CITY VERSO MPV 10/19→								
Brake Pad Set, disc brake								
1.2 VVT-i 110	81	10/19→	⬅	for brake disc diameter [mm]: 304		**13.0460-7339.2**	**607339**	ATE + WE / - WK
1.2 VVT-i 130 1.5 D-4D 100 1.5 D-4D 130 Electric	96 75 96 100	10/19→ 10/19→ 10/19→ 07/21→	➡	+ eFSB		**13.0460-3871.2**	**603871**	BOS 25839 17,8 - WE / - WK + Zub
						13.0470-3871.2	**LD3871**	BOS 25839 17,8 - WE / - WK + Zub Ceramic
TOYOTA - SUPRA (DB_) 03/19→								
Brake Pad Set, disc brake								
2.0	190	06/19→	⬅	Brake Caliper Colour: Red		**13.0460-4897.2**	**604897**	BRE + WE / - WK
			➡	Brake Caliper Colour: Red		**13.0460-5523.2**	**605523**	+ WE / - WK + Zub
						13.0470-5523.2	**LD5523**	+ WE / - WK + Zub Ceramic
3.0 GR	250	03/19→	⬅			**13.0460-4897.2**	**604897**	BRE + WE / - WK
			➡	Brake Caliper Colour: Red		**13.0460-5523.2**	**605523**	+ WE / - WK + Zub
TOYOTA - VERSO (_R2_) 04/09→08/18								
Brake Caliper								
1.6	81 - 97	04/09→08/18	➡			**24.3386-1705.5**	**241407**	without holder
1.6 D4-D 1.8 2.0 D-4D 2.2 D-4D 2.2 D-CAT	82 108 91 - 93 100 - 110 130	11/13→08/18 04/09→08/18 04/09→08/18 04/09→08/18 04/09→08/18	➡			**24.3386-1706.5**	**241408**	without holder
TOYOTA - VERSO VAN (_R2_) 04/09→08/18								
Brake Caliper								
D4d	82 - 130	04/09→08/18	➡			**24.3386-1705.5**	**241407**	without holder
VVTi	97 - 108	04/09→08/18	➡			**24.3386-1706.5**	**241408**	without holder
TOYOTA - YARIS / VIOS Saloon (_P9_) 08/05→12/13								
Guide Bolt, brake caliper								
1.5	80	08/07→12/13		Vehicle Production Country France	2	**11.8171-0008.1**	**990049**	ATE
TOYOTA - YARIS (_P1_) 01/99→12/05								
Brake Hose								
1.0	48	03/03→09/05	➡	04/03→ 08/05; - ABS; Vehicle Production Country France	2	**24.5201-0288.3**	**331621**	L= 288
1.0	50	04/99→09/05	➡	→ 03/03; - ABS; Vehicle Production Country France	2	**24.5201-0288.3**	**331621**	L= 288
1.3	64	04/02→09/05	➡	→ 08/05; - ABS; Vehicle Production Country France	2	**24.5201-0288.3**	**331621**	L= 288
1.4 D-4D	55	10/01→09/05	➡	12/01→ 08/05; - ABS; Vehicle Production Country France	2	**24.5201-0288.3**	**331621**	L= 288
TOYOTA - YARIS (_P9_) 01/05→12/14								
Guide Bolt, brake caliper								
1.0 GPL 1.0 VVT-i 1.33 VVT-i 1.3 4WD 1.3 VVT-i 1.4 D-4D 1.5	51 51 - 52 73 - 74 64 63 - 64 66 80	01/06→12/11 08/05→12/11 11/08→12/11 08/07→11/10 08/05→12/12 08/05→12/12 11/05→12/14		Vehicle Production Country France	2	**11.8171-0008.1**	**990049**	ATE
1.8 VVTi	98	01/07→12/11		→ 08/11; Vehicle Production Country France	2	**11.8171-0008.1**	**990049**	ATE

	kW				! #			
TOYOTA - YARIS (_P13_) 12/10→								
Brake Caliper								
1.5 Hybrid	55	03/12→	←			**24.3601-1747.5**	**241401**	ADV without holder
			←			**24.3601-1748.5**	**241402**	ADV without holder
TOYOTA - YARIS Hatchback Van (_P13_) 10/12→								
Brake Caliper								
1.5 Hybrid	55	04/15→	←			**24.3601-1747.5**	**241401**	ADV without holder
			←			**24.3601-1748.5**	**241402**	ADV without holder
VAUXHALL - ADAM (M13) 10/12→04/19								
Accessory Kit, brake shoes								
1.0 1.4 S	85 110	07/14→11/18 11/14→01/19	→	F6000001→; Inner Br. Drum Diam. [in]: 9		**03.0137-9309.2**	**669309**	AP
			→	→ E6999999; Inner Br. Drum Diam. [in]: 9		**03.0137-9309.2**	**669309**	AP
1.2 1.4	51 64 - 74	10/12→04/19 10/12→02/19	→	01/13→; → E6999999; Inner Br. Drum Diam. [in]: 9		**03.0137-9309.2**	**669309**	AP
			→	F6000001→; Inner Br. Drum Diam. [in]: 9		**03.0137-9309.2**	**669309**	AP
VAUXHALL - ASTRA Mk II Belmont (T85) 09/85→12/91								
Guide Bolt, brake caliper								
1.8 i	85	09/85→08/91		for brake disc thickness [mm]: 24	2	**11.8171-0008.1**	**990049**	ATE
VAUXHALL - ASTRA Mk II Convertible (T85) 01/87→09/93								
Guide Bolt, brake caliper								
2.0 i 2.0 i Cat	85 85	01/87→12/91 01/91→08/93		→ 09/91; for brake disc thickness [mm]: 24	2	**11.8171-0008.1**	**990049**	ATE
VAUXHALL - ASTRA Mk II Estate (T85) 09/84→08/91								
Guide Bolt, brake caliper								
1.8 i	83	01/90→08/91		for brake disc thickness [mm]: 24	2	**11.8171-0008.1**	**990049**	ATE
VAUXHALL - ASTRA Mk II Hatchback (T85) 09/84→08/91								
Guide Bolt, brake caliper								
1.8 GTE 2.0 GTE 2.0 GTE 16V	82 95 115	09/84→08/91 09/86→08/91 05/88→08/91		for brake disc thickness [mm]: 24	2	**11.8171-0008.1**	**990049**	ATE
VAUXHALL - ASTRA Mk III (F) Convertible (T92) 09/91→03/01								
Guide Bolt, brake caliper								
1.6 i	52	03/93→08/96			2	**11.8171-0008.1**	**990049**	ATE
			←		2	**11.8171-0008.1**	**990049**	ATE
1.6 i	55	01/96→03/01		→ 09/98	2	**11.8171-0008.1**	**990049**	ATE
			←		2	**11.8171-0008.1**	**990049**	ATE
1.8 2.0 i	92 85	09/94→08/96 03/93→10/94			2	**11.8171-0008.1**	**990049**	ATE
1.8 16V	85	11/94→03/01		→ 09/98	2	**11.8171-0008.1**	**990049**	ATE
					2	**11.8171-0008.1**	**990049**	ATE
2.0 i 16V	100	01/94→02/98		→ 10/94	2	**11.8171-0008.1**	**990049**	ATE
VAUXHALL - ASTRA Mk III (F) Estate (T92) 03/91→12/98								
Guide Bolt, brake caliper								
1.4 i 1.6 Si	44 74	09/91→02/98 03/91→12/94	←	10/91→	2	**11.8171-0008.1**	**990049**	ATE
1.4 i	60	03/91→02/98		10/91→; for vehicles with reinforced brakes	2	**11.8171-0008.1**	**990049**	ATE
			←	10/91→; Manual Transmission; not for vehicles with reinforced brakes	2	**11.8171-0008.1**	**990049**	ATE
			←	10/91→; Automatic Transmission; not for vehicles with reinforced brakes	2	**11.8171-0008.1**	**990049**	ATE
1.4 i 16V 1.7 D 1.7 TD	66 42 50 - 60	02/96→01/98 12/91→02/98 12/91→02/98		for vehicles with reinforced brakes	2	**11.8171-0008.1**	**990049**	ATE
			←	not for vehicles with reinforced brakes	2	**11.8171-0008.1**	**990049**	ATE
1.6 i	52	07/94→02/98			2	**11.8171-0008.1**	**990049**	ATE
			←		2	**11.8171-0008.1**	**990049**	ATE
1.6 i	55	09/91→12/98		10/91→ 09/98	2	**11.8171-0008.1**	**990049**	ATE
			←	10/91→ 09/98	2	**11.8171-0008.1**	**990049**	ATE

© 2022 Continental Aftermarket & Services GmbH

	kW				! #			
VAUXHALL - ASTRA Mk III (F) Estate (T92) 03/91→12/98								
Guide Bolt, brake caliper								
1.6 i 16V 1.8 i 16V 2.0 i 16V	74 85 - 92 100	01/94→02/98 09/94→02/98 01/94→02/98			2	**11.8171-0008.1**	**990049**	ATE
1.7 D	44	03/91→12/94		10/91→; for vehicles with reinforced brakes	2	**11.8171-0008.1**	**990049**	ATE
			←	10/91→; not for vehicles with reinforced brakes	2	**11.8171-0008.1**	**990049**	ATE
1.8 i	66	09/91→02/98		10/91→	2	**11.8171-0008.1**	**990049**	ATE
			←	10/91→	2	**11.8171-0008.1**	**990049**	ATE
2.0 i	85	09/91→02/98		10/91→	2	**11.8171-0008.1**	**990049**	ATE
VAUXHALL - ASTRA Mk III (F) Hatchback (T92) 09/91→02/98								
Guide Bolt, brake caliper								
1.4 i 1.4 S	44 55	09/91→02/98 09/91→02/98	←	10/91→	2	**11.8171-0008.1**	**990049**	ATE
1.4 i	60	03/92→02/98		for vehicles with reinforced brakes	2	**11.8171-0008.1**	**990049**	ATE
			←	Manual Transmission; not for vehicles with reinforced brakes	2	**11.8171-0008.1**	**990049**	ATE
			←	Automatic Transmission; not for vehicles with reinforced brakes	2	**11.8171-0008.1**	**990049**	ATE
1.4 i 16V 1.7 D 1.7 TD	66 42 50 - 60	02/96→02/98 12/91→02/98 12/91→02/98		for vehicles with reinforced brakes	2	**11.8171-0008.1**	**990049**	ATE
			←	not for vehicles with reinforced brakes	2	**11.8171-0008.1**	**990049**	ATE
1.6 i	52	02/93→12/96			2	**11.8171-0008.1**	**990049**	ATE
			←	Manual Transmission	2	**11.8171-0008.1**	**990049**	ATE
			←	Automatic Transmission	2	**11.8171-0008.1**	**990049**	ATE
1.6 i	55	09/91→02/98		10/91→	2	**11.8171-0008.1**	**990049**	ATE
			←	10/91→; Manual Transmission	2	**11.8171-0008.1**	**990049**	ATE
			←	10/91→; Automatic Transmission	2	**11.8171-0008.1**	**990049**	ATE
1.6 i 1.6 i 16V	74 74	03/92→02/98 01/94→02/98			2	**11.8171-0008.1**	**990049**	ATE
			←		2	**11.8171-0008.1**	**990049**	ATE
1.7 D	44	09/91→12/94		10/91→; for vehicles with reinforced brakes	2	**11.8171-0008.1**	**990049**	ATE
			←	10/91→; not for vehicles with reinforced brakes	2	**11.8171-0008.1**	**990049**	ATE
1.8 i	66	09/91→02/98		10/91→	2	**11.8171-0008.1**	**990049**	ATE
			←	10/91→	2	**11.8171-0008.1**	**990049**	ATE
1.8 i 16V 2.0 i 16V	85 - 92 100	09/94→02/98 01/94→02/98			2	**11.8171-0008.1**	**990049**	ATE
2.0 i 2.0 i 16V	85 110	09/91→02/98 09/91→02/98		10/91→	2	**11.8171-0008.1**	**990049**	ATE
VAUXHALL - ASTRA Mk III (F) Saloon (T92) 09/91→09/98								
Guide Bolt, brake caliper								
1.4 i	44	04/92→09/98	←		2	**11.8171-0008.1**	**990049**	ATE
1.4 i	60	04/92→09/98	←	08/95→	2	**11.8171-0008.1**	**990049**	ATE
			←	→ 07/95	2	**11.8171-0008.1**	**990049**	ATE
1.4 i 16V 1.7 D 1.7 TD	66 42 - 44 50 - 60	02/96→09/98 03/92→09/98 12/91→09/98		for vehicles with reinforced brakes	2	**11.8171-0008.1**	**990049**	ATE
			←	not for vehicles with reinforced brakes	2	**11.8171-0008.1**	**990049**	ATE
1.6 i	52 - 55	03/92→09/98			2	**11.8171-0008.1**	**990049**	ATE
			←	Manual Transmission	2	**11.8171-0008.1**	**990049**	ATE
			←	Automatic Transmission	2	**11.8171-0008.1**	**990049**	ATE
1.6 i 1.8 i	74 66	05/92→12/94 03/92→09/98			2	**11.8171-0008.1**	**990049**	ATE
			←		2	**11.8171-0008.1**	**990049**	ATE
1.6 i 16V 1.8 i 16V 2.0 i 2.0 i 16V	74 82 - 92 85 100	08/94→09/98 06/93→02/98 03/92→09/98 02/95→09/98			2	**11.8171-0008.1**	**990049**	ATE

	kW				! #			
VAUXHALL - ASTRA Mk IV (G) Convertible (T98) 03/01→10/05								
Guide Bolt, brake caliper								
1.6 16V	74 - 76	03/01→10/05	←		2	**11.8171-0008.1**	**990049**	ATE
1.8 16V	92	03/01→10/05						
2.0 Turbo	141	03/02→10/05						
2.2 16V	108	03/01→10/05						
2.0	147	09/02→10/05			2	**11.8171-0008.1**	**990049**	ATE
VAUXHALL - ASTRA Mk IV (G) Coupe (T98) 03/00→08/05								
Guide Bolt, brake caliper								
1.6 16V	76	03/00→08/05	←		2	**11.8171-0008.1**	**990049**	ATE
1.8 16V	85 - 92	03/00→08/05						
1.8 16V Dualfuel	87 - 92	07/02→08/05						
2.0 16V Turbo	140	09/00→08/05						
2.2 16V	108	03/00→08/05	←	09/00→	2	**11.8171-0008.1**	**990049**	ATE
VAUXHALL - ASTRA Mk IV (G) Estate (T98) 02/98→05/05								
Guide Bolt, brake caliper								
1.4 16V	66	02/98→05/05	←	04/98→	2	**11.8171-0008.1**	**990049**	ATE
1.6	55 - 62	03/98→04/04						
1.6 16V	74	03/98→04/04						
1.6 Dualfuel	63	03/98→04/04						
1.7 TD	50	02/98→08/00						
1.8 16V	85	02/98→08/00						
2.0 DI	60	03/98→04/04						
1.4 16V Dualfuel	66	09/99→06/03	←		2	**11.8171-0008.1**	**990049**	ATE
1.6	76	12/02→05/05						
1.6 Dualfuel	55 - 74	02/98→05/05						
1.7 CDTI 16V	59	04/03→05/05						
1.7 DTI 16V	55	02/00→05/05						
1.8 16V	92	09/00→05/05						
1.8 16V Dualfuel	87 - 92	07/02→05/05						
2.2 16V	108	03/01→05/05						
2.0 DTI 16V	74	03/98→04/04	←	08/99→	2	**11.8171-0008.1**	**990049**	ATE
VAUXHALL - ASTRA Mk IV (G) Hatchback (T98) 02/98→05/05								
Guide Bolt, brake caliper								
1.4 16V	66	02/98→05/05	←	04/98→	2	**11.8171-0008.1**	**990049**	ATE
1.6	55	02/98→09/00						
1.6 16V	74	02/98→05/05						
1.6 Dualfuel	55	02/98→12/00						
1.7 TD	50	02/98→08/00						
1.8 16V	85	02/98→09/00						
2.0 16V	100	02/98→05/05						
2.0 DI	60	02/98→05/05						
1.4 16V Dualfuel	66	09/99→06/03	←		2	**11.8171-0008.1**	**990049**	ATE
1.6	62 - 76	09/00→05/05						
1.6 Dualfuel	62 - 74	09/99→05/05						
1.7 CDTI 16V	59	04/03→05/05						
1.7 DTI 16V	55	02/00→05/05						
1.8 16V	92	09/00→05/05						
1.8 16V Dualfuel	87 - 92	07/02→05/05						
2.0 DTI 16V	74	08/99→05/05						
2.0 SRI Turbo	141	11/01→05/05						
2.2 16V	108	03/01→05/05						
2.0	147	08/02→05/05			2	**11.8171-0008.1**	**990049**	ATE
VAUXHALL - ASTRA Mk IV (G) Saloon (T98) 02/98→05/05								
Guide Bolt, brake caliper								
1.4 16V	66	09/98→05/05	←		2	**11.8171-0008.1**	**990049**	ATE
1.6	55 - 62	09/98→05/05						
1.6 16V	74	09/98→05/05						
1.6 Dualfuel	55 - 74	02/98→05/05						
1.7 CDTI 16V	59	04/03→05/05						
1.7 DTI 16V	55	02/00→05/05						
1.7 TD	50	09/98→08/00						
1.8 16V Dualfuel	92	07/02→12/03						
2.0 16V	100	09/98→05/05						

© 2022 Continental Aftermarket & Services GmbH

	kW				! #			
VAUXHALL - ASTRA Mk IV (G) Saloon (T98) 02/98→05/05								
Guide Bolt, brake caliper								
1.8 16V	85 - 92	02/98→07/04	←	04/98→	2	**11.8171-0008.1**	**990049**	ATE
1.8 16V Dualfuel	87	02/98→07/04						
2.0 DI	60	02/98→07/04						
2.0 DTI 16V	74	02/98→07/04	←	08/99→	2	**11.8171-0008.1**	**990049**	ATE
VAUXHALL - ASTRA Mk V (H) (A04) 01/04→03/11								
Spring, brake caliper								
2.0 Turbo	177	01/04→05/09		03/05→	2	**11.8116-0356.1**	**390586**	ATE
Guide Bolt, brake caliper								
1.3 CDTI	66	01/04→05/09		08/05→	2	**11.8171-0008.1**	**990049**	ATE
1.4	66	01/04→05/09			2	**11.8171-0008.1**	**990049**	ATE
1.6	77	01/04→05/09						
1.7 CDTI	59 - 74	01/04→05/09						
1.8	92	01/04→05/09						
2.0 Turbo	125	01/04→05/09						
1.6	85	01/04→05/09		01/07→	2	**11.8171-0008.1**	**990049**	ATE
1.6 Turbo	132	09/06→09/09						
1.7 CDTi	81	01/04→03/11		04/07→	2	**11.8171-0008.1**	**990049**	ATE
1.8	103	01/04→05/09		01/06→	2	**11.8171-0008.1**	**990049**	ATE
1.9 CDTI	88 - 110	01/04→05/09		09/04→	2	**11.8171-0008.1**	**990049**	ATE
1.9 CDTI 16V	88	01/04→05/09						
2.0 Turbo	147	01/04→05/09						
2.0 Turbo	177	01/04→05/09		03/05→	2	**11.8171-0008.1**	**990049**	ATE
Accessory Kit, brake shoes								
1.4	66	01/04→05/09	→	08/06→		**03.0137-9309.2**	**669309**	AP
1.6	77	01/04→05/09						
1.7 CDTI	59 - 74	01/04→05/09						
VAUXHALL - ASTRA Mk V (H) Estate (A04) 08/04→10/12								
Guide Bolt, brake caliper								
1.3 CDTi	66	08/04→03/09	←	08/05→	2	**11.8171-0008.1**	**990049**	ATE
1.4	66	08/04→03/09	←		2	**11.8171-0008.1**	**990049**	ATE
1.6	77	08/04→03/09						
1.7 CDTi	74	08/04→03/09						
1.7 CDTI	59	08/04→05/09						
1.8	92 - 103	10/04→10/10						
1.9 CDTi	88	08/04→03/09						
1.9 CDTi 16V	88	08/04→03/09						
2.0 Turbo	125	08/04→10/10						
1.6	85 - 132	08/04→03/11	←	01/07→	2	**11.8171-0008.1**	**990049**	ATE
1.7 CDTi	81	08/04→10/12	←	04/07→ 11/10	2	**11.8171-0008.1**	**990049**	ATE
1.9 CDTi	110	08/04→03/09	←	09/04→	2	**11.8171-0008.1**	**990049**	ATE
2.0 Turbo	147	08/04→10/10						
Accessory Kit, brake shoes								
1.4	66	08/04→03/09	→	08/06→		**03.0137-9309.2**	**669309**	AP
1.6	77	08/04→03/09						
1.7 CDTi	74	08/04→03/09						
1.7 CDTI	59	08/04→05/09						
VAUXHALL - ASTRA Mk V (H) Sport Hatch (A04) 02/05→11/10								
Spring, brake caliper								
2.0 VXR	176	02/09→11/10			2	**11.8116-0356.1**	**390586**	ATE
Guide Bolt, brake caliper								
1.3 CDTi	66	04/05→11/10		08/05→	2	**11.8171-0008.1**	**990049**	ATE
1.4 i 16V	66	03/05→11/10			2	**11.8171-0008.1**	**990049**	ATE
1.6	77	02/05→11/10						
1.7 CDTi	74	02/05→11/10						
1.8	92	02/05→11/10						
1.8 i 16V	103	03/07→11/10						
1.9 CDTi	88 - 110	02/05→11/10						
2.0 Turbo	125	02/05→11/10						
2.0 VXR	176	02/09→11/10						
1.6	132	10/06→11/10		01/07→	2	**11.8171-0008.1**	**990049**	ATE
1.6 i 16V	85	12/06→11/10						

	kW				! #			
VAUXHALL - ASTRA Mk V (H) Sport Hatch (A04) 02/05→11/10								
Guide Bolt, brake caliper								
1.7 CDTi	81	02/07→11/09		04/07→	2	**11.8171-0008.1**	**990049**	ATE
1.9 CDTi	74	08/05→11/10		09/05→	2	**11.8171-0008.1**	**990049**	ATE
Accessory Kit, brake shoes								
1.4 i 16V 1.6 1.7 CDTi	66 77 74	03/05→11/10 02/05→11/10 02/05→11/10	➡	08/06→		**03.0137-9309.2**	**669309**	AP
VAUXHALL - ASTRA Mk V (H) TwinTop (A04) 09/05→08/11								
Guide Bolt, brake caliper								
1.6 1.9 CDTi 2.0 2.0 Turbo	77 110 125 147	09/05→11/10 01/06→11/10 02/06→11/10 01/06→11/10		03/06→	2	**11.8171-0008.1**	**990049**	ATE
1.6 i 16V	85	10/06→08/11		12/06→	2	**11.8171-0008.1**	**990049**	ATE
1.8	103	05/08→11/10			2	**11.8171-0008.1**	**990049**	ATE
VAUXHALL - ASTRA Mk VII (K) (B16) 07/15→								
Guide Bolt, brake caliper								
1.0 1.4 1.4 Turbo 1.6 BiTurbo 1.6 CDTi 1.6 Turbo	77 74 92 - 110 110 70 - 118 147	07/15→ 07/15→ 07/15→ 08/18→ 07/15→ 11/15→	⬅			**11.8171-0008.1**	**990049**	ATE
Brake Disc								
1.0 1.2 Turbo 1.4 1.4 Turbo 1.5 CRDI 1.6 BiTurbo 1.6 CDTi 1.6 Turbo	77 81 - 107 74 92 - 110 77 - 90 110 70 - 118 147	07/15→ 08/19→ 07/15→ 07/15→ 08/19→ 08/18→ 07/15→ 11/15→	⬅			**24.0126-0187.1**	**426187**	Ø 276 Brake Disc Thickness [mm] 26 Minimum thickness [mm] 23 Vented + S
VAUXHALL - ASTRA Mk VII (K) Estate (B16) 07/15→								
Guide Bolt, brake caliper								
1.0 1.4 1.4 Turbo 1.6 BiTurbo 1.6 CDTi 1.6 Turbo	77 74 92 - 110 110 70 - 118 147	11/15→ 11/15→ 11/15→ 08/18→ 07/15→ 11/15→	⬅			**11.8171-0008.1**	**990049**	ATE
Brake Disc								
1.0 1.2 Turbo 1.4 1.4 Turbo 1.5 CRDI 1.6 BiTurbo 1.6 CDTi 1.6 Turbo	77 81 - 107 74 92 - 110 77 - 90 110 70 - 118 147	11/15→ 08/19→ 11/15→ 11/15→ 08/19→ 08/18→ 07/15→ 11/15→	⬅			**24.0126-0187.1**	**426187**	Ø 276 Brake Disc Thickness [mm] 26 Minimum thickness [mm] 23 Vented + S
VAUXHALL - ASTRAVAN Mk III (F) Estate Van (T92) 01/91→08/98								
Guide Bolt, brake caliper								
1.4 i	44	09/91→08/95	⬅	10/91→	2	**11.8171-0008.1**	**990049**	ATE
1.6 i	52 - 55	10/91→08/98			2	**11.8171-0008.1**	**990049**	ATE
			⬅		2	**11.8171-0008.1**	**990049**	ATE
1.7 D 1.7 TD	44 50 - 60	10/91→12/94 09/94→08/98		for vehicles with reinforced brakes	2	**11.8171-0008.1**	**990049**	ATE
			⬅	not for vehicles with reinforced brakes	2	**11.8171-0008.1**	**990049**	ATE

© 2022 Continental Aftermarket & Services GmbH

	kW				! #			
VAUXHALL - ASTRAVAN Mk IV (G) Estate Van (T98) 01/93→08/06								
Guide Bolt, brake caliper								
1.4 16V	66	09/00→05/05	←		2	**11.8171-0008.1**	**990049**	ATE
1.6 Dualfuel	55 - 74	02/98→08/05						
1.6 Dualfuel 16V	77	10/04→12/05						
1.6 i	55 - 62	08/98→08/06						
1.7 CDTI	59	07/03→08/06						
1.7 DTI 16V	55	04/01→08/06						
1.7 TD	50	08/98→08/06						
2.0 DI	60	08/98→08/06						
2.0 DTI	74	04/04→08/06						
VAUXHALL - ASTRAVAN Mk V (H) Estate Van (A04) 03/05→								
Guide Bolt, brake caliper								
1.3 CDTi	66	08/05→	←	→ 11/10	2	**11.8171-0008.1**	**990049**	ATE
1.4 i	66	03/05→						
1.6	76	03/05→						
1.7 CDTI	74	03/05→11/11						
1.9 CDTi	88 - 110	03/05→11/11						
1.7 CDTi	59	03/05→07/06	←		2	**11.8171-0008.1**	**990049**	ATE
Accessory Kit, brake shoes								
1.4 i	66	03/05→	→	08/06→ 11/10		**03.0137-9309.2**	**669309**	AP
1.6	76	03/05→						
1.7 CDTI	74	03/05→11/11						
VAUXHALL - CALIBRA (C89) 06/90→07/97								
Guide Bolt, brake caliper								
2.0 i	85	06/90→07/97			2	**11.8171-0008.1**	**990049**	ATE
2.0 i 16V	100 - 110	06/90→07/97						
2.0 i 16V 4x4	100 - 110	06/90→07/97	←		2	**11.8171-0008.1**	**990049**	ATE
2.0 i 4x4	85	06/90→07/97						
2.0 i Turbo 4x4	150	03/92→07/97	←	T1000001→	2	**11.8171-0008.1**	**990049**	ATE
2.5 i V6	125	04/93→07/97	←	→ S9999999	2	**11.8171-0008.1**	**990049**	ATE
VAUXHALL - CARLTON Mk III Estate (V87) 09/86→03/94								
Guide Bolt, brake caliper								
1.8	65	09/87→03/94	←	L1019855→; → 08/93	2	**11.8171-0008.1**	**990049**	ATE
1.8 i	85	09/86→03/94						
1.8 S	66	09/86→03/94						
2.3 D	54	09/86→03/94						
2.3 TD Interc.	74	09/88→03/94						
2.0	85	09/86→03/94		→ K1000098	2	**11.8171-0008.1**	**990049**	ATE
2.0 i	90	09/86→03/94	←	K1000099→; → 08/93	2	**11.8171-0008.1**	**990049**	ATE
2.2 TD	66	09/86→08/88	←	L1019855→	2	**11.8171-0008.1**	**990049**	ATE
3.0	130	03/87→03/94	←	→ M1000000	2	**11.8171-0008.1**	**990049**	ATE
VAUXHALL - CARLTON Mk III Saloon (V87) 09/86→03/94								
Guide Bolt, brake caliper								
1.8	65	09/87→03/94	←	L1019855→; → 08/93	2	**11.8171-0008.1**	**990049**	ATE
1.8 i	85	09/86→03/94						
1.8 S	66	09/86→03/94						
2.3 D	54	09/86→03/94						
2.3 TD Interc.	74	08/88→03/94						
2.0	74 - 85	09/86→03/94		→ K1000098	2	**11.8171-0008.1**	**990049**	ATE
2.0 i	90	09/86→03/94	←	K1000099→; → 08/93	2	**11.8171-0008.1**	**990049**	ATE
2.2 TD	66	10/86→08/88	←	L1019855→	2	**11.8171-0008.1**	**990049**	ATE
3.0 3000	130	03/87→09/90	←	→ M1000000	2	**11.8171-0008.1**	**990049**	ATE
3000 Cat	130	03/88→03/94						
VAUXHALL - CAVALIER Mk III Hatchback (J89) 09/88→11/95								
Guide Bolt, brake caliper								
1.4 S	55	09/88→11/95	←	N1038530→; → 08/95	2	**11.8171-0008.1**	**990049**	ATE
1.6 i	52 - 55	09/88→11/95	←	N5000001→; → 08/95	2	**11.8171-0008.1**	**990049**	ATE
1.6	60	09/88→05/93	←	N1038530→	2	**11.8171-0008.1**	**990049**	ATE
			←	N5000001→	2	**11.8171-0008.1**	**990049**	ATE
1.7 D	42	09/88→09/92		S1000001→	2	**11.8171-0008.1**	**990049**	ATE
1.8	66	09/88→10/90		S5000001→	2	**11.8171-0008.1**	**990049**	ATE

	kW				! #			
VAUXHALL - CAVALIER Mk III Hatchback (J89) 09/88→11/95								
Guide Bolt, brake caliper								
1.7 D 1.8	42 66	09/88→09/92 09/88→10/90	←	N1038530→ R1999999	2	**11.8171-0008.1**	**990049**	ATE
			←	N5000001→ R5999999	2	**11.8171-0008.1**	**990049**	ATE
1.7 D 1.8 i Cat	44 66	07/92→11/95 03/90→11/95		S1000001→; → 08/95	2	**11.8171-0008.1**	**990049**	ATE
				S5000001→; → 08/95	2	**11.8171-0008.1**	**990049**	ATE
			←	N1038530→ R1999999	2	**11.8171-0008.1**	**990049**	ATE
			←	N5000001→ R5999999	2	**11.8171-0008.1**	**990049**	ATE
1.7 TD	60	09/88→11/95		S1000001→; → 08/95	2	**11.8171-0008.1**	**990049**	ATE
			←	N1038530→ R1999999	2	**11.8171-0008.1**	**990049**	ATE
			←	N5000001→ R5999999	2	**11.8171-0008.1**	**990049**	ATE
2.0 i 2.0 i 16V 2.0 SRi	85 100 95	09/88→10/92 09/92→08/95 09/88→09/92			2	**11.8171-0008.1**	**990049**	ATE
2.0 i 16V 2.0 i Cat	110 85	09/88→11/95 09/90→11/95		→ 08/95	2	**11.8171-0008.1**	**990049**	ATE
2.0 i 16V 4x4 2.0 i 4x4	110 85	01/92→11/93 09/91→10/92			2	**11.8171-0008.1**	**990049**	ATE
			←		2	**11.8171-0008.1**	**990049**	ATE
2.5 V6	125	09/88→06/94	←	02/93→	2	**11.8171-0008.1**	**990049**	ATE
VAUXHALL - CAVALIER Mk III Saloon (J89) 08/88→11/95								
Guide Bolt, brake caliper								
1.4 S 1.6 i	55 52 - 55	09/88→11/95 09/88→11/95	←	N1038530→; → 08/95	2	**11.8171-0008.1**	**990049**	ATE
			←	N5000001→; → 08/95	2	**11.8171-0008.1**	**990049**	ATE
1.6	60	09/88→05/93	←	N1038530→	2	**11.8171-0008.1**	**990049**	ATE
			←	N5000001→	2	**11.8171-0008.1**	**990049**	ATE
1.7 D 1.8	42 66	09/88→09/92 09/88→08/95		S5000001→	2	**11.8171-0008.1**	**990049**	ATE
				S1000001→	2	**11.8171-0008.1**	**990049**	ATE
			←	N1038530→ R1999999	2	**11.8171-0008.1**	**990049**	ATE
			←	N5000001→ R5999999	2	**11.8171-0008.1**	**990049**	ATE
1.7 D 1.8 i Cat	44 66	07/92→11/95 03/90→11/95		S1000001→; → 08/95	2	**11.8171-0008.1**	**990049**	ATE
				S5000001→; → 08/95	2	**11.8171-0008.1**	**990049**	ATE
			←	N1038530→ R1999999	2	**11.8171-0008.1**	**990049**	ATE
			←	N5000001→ R5999999	2	**11.8171-0008.1**	**990049**	ATE
1.7 TD	60	09/88→11/95		S1000001→; → 08/95	2	**11.8171-0008.1**	**990049**	ATE
			←	N1038530→ R1999999	2	**11.8171-0008.1**	**990049**	ATE
			←	N5000001→ R5999999	2	**11.8171-0008.1**	**990049**	ATE
2.0 i 2.0 SRi 2.0 SRi 16V	85 95 100	09/88→10/90 09/88→08/92 09/92→08/95			2	**11.8171-0008.1**	**990049**	ATE
2.0 i 16V 2.0 i Cat	110 85	09/88→11/95 09/88→11/95		→ 08/95	2	**11.8171-0008.1**	**990049**	ATE
2.0 i 16V 4x4	110	09/88→11/95	←	→ 08/95	2	**11.8171-0008.1**	**990049**	ATE
2.0 i 4x4 2.0 i Turbo 4x4	85 - 95 150	09/88→10/92 09/92→06/94	←		2	**11.8171-0008.1**	**990049**	ATE
2.5 V6	125	08/88→06/94	←	02/93→	2	**11.8171-0008.1**	**990049**	ATE
VAUXHALL - COMBO Mk I (B) (S93) 07/94→10/01								
Guide Bolt, brake caliper								
1.4 1.4 16V 1.7 D	44 66 44	07/94→10/01 08/99→10/01 07/94→10/01	←	→ 09/00	2	**11.8171-0008.1**	**990049**	ATE
VAUXHALL - COMBO Mk II (C) Box Body/MPV (F25) 09/01→02/12								
Guide Bolt, brake caliper								
1.3 CDTI 16V 1.4 i 16V 1.6 1.7 DI 16V 1.7 DTI 16V	51 - 55 66 64 48 55	09/04→02/12 01/04→11/11 10/01→11/11 09/01→11/11 10/01→11/11		43033899, 53000001→; → 10/11; for increased payload	2	**11.8171-0008.1**	**990049**	ATE
1.4 16V 1.6	66 62	10/01→05/07 09/01→10/04		43033899, 53000001→; for increased payload	2	**11.8171-0008.1**	**990049**	ATE
1.6 CNG 16V 1.7 CDTI 16V	69 - 71 74	04/05→02/12 12/04→11/11		→ 10/11	2	**11.8171-0008.1**	**990049**	ATE

© 2022 Continental Aftermarket & Services GmbH

	kW				! #			
VAUXHALL - COMBO Mk III (D) Box Body/MPV (X12) 11/11→								
Accessory Kit, brake shoes								
1.3 CDTi 1.6 CDTi	66 - 70 66 - 77	11/11→ 11/11→	➡	Inner Br. Drum Diam. [in]: 10; for extended wheelbase		**03.0137-9309.2**	**669309**	AP
1.4 2.0 CDTi	70 99	11/11→ 11/11→	➡	Inner Br. Drum Diam. [in]: 10		**03.0137-9309.2**	**669309**	AP
VAUXHALL - COMBO Mk IV (E) Box Body/MPV (K9) 06/18→								
Guide Bolt, brake caliper								
1.2 1.5 D 1.5 D 4x4 1.6 D Combo-e	81 56 - 96 96 55 - 73 100	02/19→ 08/18→ 08/18→ 06/18→ 07/21→	⬅			**11.8171-0008.1**	**990049**	ATE
Brake Pad Set, disc brake								
1.2 1.5 D 1.5 D 4x4 1.6 D Combo-e	81 56 - 96 96 55 - 73 100	02/19→ 08/18→ 08/18→ 06/18→ 07/21→	⬅	for brake disc diameter [mm]: 283		**13.0460-3870.2** **13.0470-3870.2**	**603870** **LD3870**	BOS 25895 18,5 - WE / - WK + Zub BOS 25895 18,5 - WE / - WK + Zub Ceramic
			⬅	for brake disc diameter [mm]: 304; →Orga 16246		**13.0460-7339.2**	**607339**	ATE + WE / - WK
			➡	+ eFSB		**13.0460-3871.2** **13.0470-3871.2**	**603871** **LD3871**	BOS 25839 17,8 - WE / - WK + Zub BOS 25839 17,8 - WE / - WK + Zub Ceramic
VAUXHALL - COMBO Mk IV (E) Life (K9) 06/18→								
Guide Bolt, brake caliper								
1.2 1.5 Combo-e	81 - 96 75 - 96 100	06/18→ 06/18→ 06/21→	⬅			**11.8171-0008.1**	**990049**	ATE
Brake Pad Set, disc brake								
1.2 1.5 Combo-e	81 - 96 75 - 96 100	06/18→ 06/18→ 06/21→	⬅	for brake disc diameter [mm]: 283		**13.0460-3870.2** **13.0470-3870.2**	**603870** **LD3870**	BOS 25895 18,5 - WE / - WK + Zub BOS 25895 18,5 - WE / - WK + Zub Ceramic
			⬅	for brake disc diameter [mm]: 304; →Orga 16246		**13.0460-7339.2**	**607339**	ATE + WE / - WK
			➡	+ eFSB		**13.0460-3871.2** **13.0470-3871.2**	**603871** **LD3871**	BOS 25839 17,8 - WE / - WK + Zub BOS 25839 17,8 - WE / - WK + Zub Ceramic
VAUXHALL - COMBO TOUR Mk II (C) (F25) 09/01→02/12								
Guide Bolt, brake caliper								
1.3 CDTI 16V 1.4 1.6 1.7 DI 16V	51 66 64 48	09/04→09/06 10/04→09/10 10/01→06/04 09/01→06/04		43033899, 53000001→; for increased payload	2	**11.8171-0008.1**	**990049**	ATE
1.3 CDTI 16V 1.7 DTI 16V	55 55	07/06→02/12 10/01→02/12		43033899, 53000001→; → 10/11; for increased payload	2	**11.8171-0008.1**	**990049**	ATE
1.6 CNG 1.7 CDTI 16V	69 74	06/06→09/10 12/04→09/10			2	**11.8171-0008.1**	**990049**	ATE
1.6 CNG	71	04/05→02/12		→ 10/11	2	**11.8171-0008.1**	**990049**	ATE
VAUXHALL - CORSA Mk I (B) (S93) 12/92→09/00								
Guide Bolt, brake caliper								
1.0 i 12V 1.4 i 16V 1.4 i S 1.5 TD 1.6 i 16V 1.7 D	40 66 60 49 78 44	11/96→09/00 09/94→09/00 03/93→09/00 03/93→10/96 09/94→09/00 02/96→09/00	⬅		2	**11.8171-0008.1**	**990049**	ATE
1.2 i	33	03/93→09/00	⬅	Automatic Transmission; for vehicles without sports package	2	**11.8171-0008.1**	**990049**	ATE
			⬅	04/98→; for vehicles without sports package	2	**11.8171-0008.1**	**990049**	ATE
			⬅	04/98→; for vehicles with sports package	2	**11.8171-0008.1**	**990049**	ATE

	kW				! #			
VAUXHALL - CORSA Mk I (B) (S93) 12/92→09/00								
Guide Bolt, brake caliper								
1.2 i	33	03/93→09/00	←	04/98→; Manual Transmission; for vehicles without sports package	2	**11.8171-0008.1**	**990049**	ATE
			←	04/98→; Automatic Transmission; for vehicles without sports package	2	**11.8171-0008.1**	**990049**	ATE
			←	Manual Transmission; for vehicles without sports package	2	**11.8171-0008.1**	**990049**	ATE
1.2 i 16V	48	03/98→09/00	←	04/98→; for vehicles without sports package	2	**11.8171-0008.1**	**990049**	ATE
			←	04/98→; for vehicles with sports package	2	**11.8171-0008.1**	**990049**	ATE
			←	04/98→; Manual Transmission; for vehicles without sports package	2	**11.8171-0008.1**	**990049**	ATE
			←	04/98→; Automatic Transmission; for vehicles without sports package	2	**11.8171-0008.1**	**990049**	ATE
1.4 i	44	03/93→09/00	←	for vehicles with sports package	2	**11.8171-0008.1**	**990049**	ATE
			←	Automatic Transmission; for vehicles without sports package	2	**11.8171-0008.1**	**990049**	ATE
			←	Manual Transmission; for vehicles without sports package	2	**11.8171-0008.1**	**990049**	ATE
1.5 D	37	12/92→12/96	←	03/93→	2	**11.8171-0008.1**	**990049**	ATE
1.6 GSI 16V	80	03/93→09/00	←	09/93→	2	**11.8171-0008.1**	**990049**	ATE
VAUXHALL - CORSA Mk II (C) (X01) 08/00→04/07								
Guide Bolt, brake caliper								
1.7 CDTI 16V	74	08/00→09/06		06/03→	2	**11.8171-0008.1**	**990049**	ATE
VAUXHALL - CORSA Mk III (D) (S07) 07/06→08/14								
Brake Caliper								
1.4 1.6 SRi 1.6 VXR 1.7 CDTI	88 110 141 - 155 96	08/12→08/14 05/07→08/14 11/06→08/14 03/07→08/14	→			**24.3367-1717.5**	**241405**	BOS without holder
			→			**24.3367-1718.5**	**241406**	BOS without holder
1.7 CDTI	92	11/06→08/14	→	→ 84039950;		**24.3367-1717.5**	**241405**	BOS without holder
			→	→ 84039950;		**24.3367-1718.5**	**241406**	BOS without holder
Guide Bolt, brake caliper								
1.6 SRi	110	05/07→08/14		06/07→	2	**11.8171-0008.1**	**990049**	ATE
1.6 VXR	141 - 155	11/06→08/14			2	**11.8171-0008.1**	**990049**	ATE
Accessory Kit, brake shoes								
1.0 1.0 i 12V 1.2 1.2 LPG 1.3 CDTI 1.4	44 48 51 - 59 59 - 63 70 74	08/06→08/14 01/10→08/14 08/06→08/14 09/09→08/14 07/10→08/14 01/10→08/14	→	Number of Doors: 5		**03.0137-9309.2**	**669309**	AP
1.2 i 16V	63	12/09→08/14	→	06/10→; Number of Doors: 5		**03.0137-9309.2**	**669309**	AP
1.3 CDTI 1.4 1.4 LPG	55 - 66 66 66	08/06→08/14 08/06→08/14 07/06→08/14	→	10/06→; Number of Doors: 5		**03.0137-9309.2**	**669309**	AP
VAUXHALL - CORSA Mk IV (E) (X15) 08/14→								
Spring, brake caliper								
1.0 1.2 1.3 CDTi 1.4	66 - 85 51 55 - 70 55 - 74	08/14→ 08/14→ 08/14→ 08/14→	←	11/14→; for brake disc diameter [mm]: 284	2	**11.8116-0356.1**	**390586**	ATE
1.4	110	07/15→	←	for brake disc diameter [mm]: 284	2	**11.8116-0356.1**	**390586**	ATE
Guide Bolt, brake caliper								
1.0 1.2 1.3 CDTi	66 - 85 51 55 - 70	08/14→ 08/14→ 08/14→		11/14→; for brake disc diameter [mm]: 308	2	**11.8171-0008.1**	**990049**	ATE

© 2022 Continental Aftermarket & Services GmbH

	kW				! #			
VAUXHALL - CORSA Mk IV (E) (X15) 08/14→								
Guide Bolt, brake caliper								
1.4	55 - 74	08/14→		11/14→; for brake disc diameter [mm]: 308	2	**11.8171-0008.1**	**990049**	ATE
1.4	110	07/15→		for brake disc diameter [mm]: 308	2	**11.8171-0008.1**	**990049**	ATE
Accessory Kit, brake shoes								
1.0 1.2 1.3 CDTi 1.4	66 - 85 51 55 - 70 55 - 74	08/14→ 08/14→ 08/14→ 08/14→	➡	11/14→; Inner Br. Drum Diam. [in]: 9		**03.0137-9309.2**	**669309**	AP
1.4	110	07/15→	➡	Inner Br. Drum Diam. [in]: 9		**03.0137-9309.2**	**669309**	AP
VAUXHALL - CORSA Mk V (F) 07/19→								
Brake Pad Set, disc brake								
CORSA-e	100	07/19→	➡			**13.0460-3871.2** **13.0470-3871.2**	**603871** **LD3871**	BOS 25839 17,8 - WE / - WK + Zub BOS 25839 17,8 - WE / - WK + Zub Ceramic
Brake Disc								
1.2 1.5 CORSA-e	55 - 96 75 100	07/19→ 07/19→ 07/19→	⬅			**24.0122-0194.1**	**422194**	Ø 266 Brake Disc Thickness [mm] 22 Minimum thickness [mm] 20 Vented + S
Wheel Brake Cylinder								
1.2 1.5	55 - 96 75	07/19→ 07/19→	➡		2	**24.3220-1743.3**	**020556**	ALU
VAUXHALL - CORSAVAN Mk I (B) Hatchback Van (S93) 01/94→09/00								
Guide Bolt, brake caliper								
1.4 i	44	01/94→09/00	⬅		2	**11.8171-0008.1**	**990049**	ATE
			⬅	for vehicles with sports package	2	**11.8171-0008.1**	**990049**	ATE
			⬅	Manual Transmission; for vehicles without sports package	2	**11.8171-0008.1**	**990049**	ATE
			⬅	Automatic Transmission; for vehicles without sports package	2	**11.8171-0008.1**	**990049**	ATE
1.5 D 1.7 D	37 44	08/94→12/95 01/94→09/00	⬅		2	**11.8171-0008.1**	**990049**	ATE
VAUXHALL - CORSAVAN Mk II (C) Hatchback Van (X01) 09/00→11/06								
Accessory Kit, brake shoes								
1.2 16V 1.2 16V Dualfuel	59 59	07/04→11/06 07/04→12/05	➡	Number of Doors: 5		**03.0137-9309.2**	**669309**	AP
VAUXHALL - CORSAVAN Mk III (D) Hatchback Van (S07) 07/06→								
Accessory Kit, brake shoes								
1.2	51	01/10→	➡	06/10→; Number of Doors: 5		**03.0137-9309.2**	**669309**	AP
1.2	59	07/09→	➡	Number of Doors: 5		**03.0137-9309.2**	**669309**	AP
1.3 CDTI	55 - 66	07/06→	➡	10/06→; Number of Doors: 5		**03.0137-9309.2**	**669309**	AP
1.3 CDTI	70	07/06→	➡	06/10→		**03.0137-9309.2**	**669309**	AP
VAUXHALL - CORSAVAN Mk IV (E) Hatchback Van (X15) 10/14→								
Spring, brake caliper								
1.2 1.3 CDTi	51 55 - 70	10/14→ 10/14→	⬅	11/14→; for brake disc diameter [mm]: 284	2	**11.8116-0356.1**	**390586**	ATE
Guide Bolt, brake caliper								
1.2 1.3 CDTi	51 55 - 70	10/14→ 10/14→		11/14→; for brake disc diameter [mm]: 308	2	**11.8171-0008.1**	**990049**	ATE
Accessory Kit, brake shoes								
1.2 1.3 CDTi	51 55 - 70	10/14→ 10/14→	➡	11/14→; Inner Br. Drum Diam. [in]: 9		**03.0137-9309.2**	**669309**	AP

	kW				! #			
VAUXHALL - CROSSLAND X (P17) 03/17→								
Brake Pad Set, disc brake								
1.2 1.5 Turbo D 1.6 Turbo D	61 - 96 75 - 88 73 - 88	03/17→ 06/18→ 03/17→	←	for brake disc diameter [mm]: 266; Brake Size: 14"		**13.0460-3994.2** **13.0470-3994.2**	**603994** **LD3994**	BOS 23599 19,0 - WE / - WK + Zub BOS 23599 19,0 - WE / - WK + Zub Ceramic
Brake Disc								
1.2 1.5 Turbo D 1.6 Turbo D	61 - 96 75 - 88 73 - 88	03/17→ 06/18→ 03/17→	←	Brake Size: 14"		**24.0122-0194.1**	**422194**	Ø 266 Brake Disc Thickness [mm] 22 Minimum thickness [mm] 20 Vented + S
VAUXHALL - FRONTERA Mk I (A) (U92) 09/91→10/98								
Brake Pad Set, disc brake								
2.0 2.2 i 2.3 TD 2.4 i 2.5 TDS 2.8 TD	85 100 74 92 85 83	04/95→08/98 03/95→10/98 09/91→06/98 03/92→10/98 11/91→06/98 01/95→12/96	→	SV720103→		**13.0460-5927.2**	**605927**	AKE 21875 16,0 + WK
Brake Disc								
2.0 2.2 i 2.3 TD 2.4 i 2.5 TDS 2.8 TD	85 100 74 92 85 83	04/95→08/98 03/95→10/98 09/91→06/98 03/92→10/98 11/91→06/98 01/95→12/96	→	SV720103→		**24.0118-0122.1**	**418122**	Ø 313.5 Brake Disc Thickness [mm] 18 Minimum thickness [mm] 16.6 Vented
VAUXHALL - FRONTERA Mk I (A) Sport (U92) 03/92→10/98								
Brake Pad Set, disc brake								
2.0 i 2.5 TDS 2.8 TD	85 85 83	03/92→10/98 09/96→10/98 01/95→12/96	→	SV720103→		**13.0460-5927.2**	**605927**	AKE 21875 16,0 + WK
Brake Disc								
2.0 i 2.5 TDS 2.8 TD	85 85 83	03/92→10/98 09/96→10/98 01/95→12/96	→	SV720103→		**24.0118-0122.1**	**418122**	Ø 313.5 Brake Disc Thickness [mm] 18 Minimum thickness [mm] 16.6 Vented
VAUXHALL - FRONTERA Mk II (B) (U99) 10/98→10/04								
Brake Pad Set, disc brake								
2.2 DTI 2.2 i 3.2 i	85 - 88 100 151	10/98→10/04 10/98→10/04 10/98→10/04	→	→ 02/04		**13.0460-5927.2**	**605927**	AKE 21875 16,0 + WK
Brake Disc								
2.2 DTI 2.2 i 3.2 i	85 - 88 100 151	10/98→10/04 10/98→10/04 10/98→10/04	→	→ 02/04		**24.0118-0122.1**	**418122**	Ø 313.5 Brake Disc Thickness [mm] 18 Minimum thickness [mm] 16.6 Vented
VAUXHALL - GRANDLAND X (A18) 06/17→								
Guide Bolt, brake caliper								
1.2 Turbo 1.5 Turbo D 1.6 Turbo D 1.6 Turbo Hybrid 1.6 Turbo Hybrid4 2.0 D	96 96 88 133 - 165 147 - 221 130	06/17→ 04/18→ 06/17→ 12/19→ 06/19→ 10/17→	←	for brake disc diameter [mm]: 304; →Orga 16246		**11.8171-0008.1**	**990049**	ATE
Brake Pad Set, disc brake								
1.2 Turbo 1.5 Turbo D 1.6 Turbo D 2.0 D	96 96 88 130	06/17→ 04/18→ 06/17→ 10/17→	←	for brake disc diameter [mm]: 304; →Orga 16246		**13.0460-7339.2**	**607339**	ATE + WE / - WK
			→	for brake disc diameter [mm]: 268; +POC 1F*		**13.0460-3871.2** **13.0470-3871.2**	**603871** **LD3871**	BOS 25839 17,8 - WE / - WK + Zub BOS 25839 17,8 - WE / - WK + Zub Ceramic

© 2022 Continental Aftermarket & Services GmbH

	kW				! #			
VAUXHALL - GRANDLAND X (A18) 06/17→								
Brake Pad Set, disc brake								
1.6 Turbo Hybrid	133 - 165	12/19→	←	for brake disc diameter [mm]: 304; →Orga 16246		**13.0460-7339.2**	**607339**	ATE + WE / - WK
1.6 Turbo Hybrid4	147 - 221	06/19→	→	for brake disc diameter [mm]: 268		**13.0460-3871.2**	**603871**	BOS 25839 17,8 - WE / - WK + Zub
						13.0470-3871.2	**LD3871**	BOS 25839 17,8 - WE / - WK + Zub Ceramic
VAUXHALL - INSIGNIA Mk II (B) Country Tourer (Z18) 03/17→								
Brake Pad Set, disc brake								
2.0 D	125	03/17→	←	+POC J17/J61; Brake Size: 17"		**13.0460-5512.2**	**605512**	TRW + WK + Zub
2.0 D 4x4	125 - 154	07/17→				**13.0470-5512.2**	**LD5512**	TRW + WK + Zub Ceramic
			←	+POC J60; Brake Size: 16"		**13.0470-5511.2**	**LD5511**	TRW + WK + Zub Ceramic
VAUXHALL - INSIGNIA Mk II (B) Hatchback (Z18) 03/17→								
Brake Pad Set, disc brake								
1.5	103 - 121	03/17→	←	+POC J17/J61; Brake Size: 17"		**13.0460-5512.2**	**605512**	TRW + WK + Zub
						13.0470-5512.2	**LD5512**	TRW + WK + Zub Ceramic
1.5 CDTi	90	02/20→						
1.6 D	81 - 100	03/17→	←	+POC J60; Brake Size: 16"		**13.0470-5511.2**	**LD5511**	TRW + WK + Zub Ceramic
1.6 Turbo	147	06/18→						
2.0 4x4	191	03/17→						
2.0 D	125 - 128	03/17→						
2.0 D 4x4	128 - 154	07/17→						
2.0 GSI 4X4	169	04/20→						
2.0 T	147	04/20→						
VAUXHALL - INSIGNIA Mk II (B) Sports Tourer (Z18) 03/17→								
Brake Pad Set, disc brake								
1.5	103 - 121	03/17→	←	+POC J17/J61; Brake Size: 17"		**13.0460-5512.2**	**605512**	TRW + WK + Zub
						13.0470-5512.2	**LD5512**	TRW + WK + Zub Ceramic
1.6 D	81 - 100	03/17→	←	+POC J60; Brake Size: 16"		**13.0470-5511.2**	**LD5511**	TRW + WK + Zub Ceramic
1.6 Turbo	147	06/18→						
2.0 4x4	191	03/17→						
2.0 D	125	03/17→						
2.0 D 4x4	154	07/17→						
VAUXHALL - MERIVA A (X03) 01/03→06/10								
Guide Bolt, brake caliper								
1.3 CDTI	51	04/05→06/10		→ 05/10	2	**11.8171-0008.1**	**990049**	ATE
1.7 DTI	55	06/03→06/10						
1.8 i 16V	92	05/03→06/10						
1.3 CDTI	55	01/03→10/09		09/03→	2	**11.8171-0008.1**	**990049**	ATE
1.4 16V Twinport	66	01/03→06/10		07/04→ 05/10; Rim Hole Number: 5	2	**11.8171-0008.1**	**990049**	ATE
1.6 i 16V	74	01/03→09/05		05/03→	2	**11.8171-0008.1**	**990049**	ATE
1.6 i 16V Twinport	77	05/03→06/10		01/06→ 05/10	2	**11.8171-0008.1**	**990049**	ATE
1.7 CDTi	74	09/03→08/05			2	**11.8171-0008.1**	**990049**	ATE
VAUXHALL - MERIVA Mk II (B) (S10) 06/10→								
Guide Bolt, brake caliper								
1.3 CDTi	70	06/10→			2	**11.8171-0008.1**	**990049**	ATE
1.3 CDTI	55	06/10→						
1.4	74 - 103	06/10→						
1.4 LPG	88	06/11→						
1.6 CDTi	81 - 100	08/13→						
1.7 CDTi	81 - 96	06/10→						
1.7 CDTI	74	06/10→						
1.6 CDTI	70	01/14→		03/14→	2	**11.8171-0008.1**	**990049**	ATE
VAUXHALL - MOKKA 06/20→								
Brake Pad Set, disc brake								
MOKKA-e	100	06/20→	→	+ eFSB		**13.0460-3871.2**	**603871**	BOS 25839 17,8 - WE / - WK + Zub
						13.0470-3871.2	**LD3871**	BOS 25839 17,8 - WE / - WK + Zub Ceramic

	kW				! #			
VAUXHALL - MONTEREY (M92) 09/91→07/98								
Brake Pad Set, disc brake								
3.1 TD 3.2	84 130	09/91→07/98 06/92→07/98	➡			**13.0460-5927.2**	**605927**	AKE 21875 16,0 + WK
Brake Disc								
3.1 TD 3.2	84 130	09/91→07/98 06/92→07/98	➡			**24.0118-0122.1**	**418122**	Ø 313.5 Brake Disc Thickness [mm] 18 Minimum thickness [mm] 16.6 Vented
VAUXHALL - MONTEREY Mk II (M98) 07/98→08/99								
Brake Pad Set, disc brake								
3.0 DTI 3.5 V6 24V	117 158	07/98→08/99 07/98→08/99	➡			**13.0460-5927.2**	**605927**	AKE 21875 16,0 + WK
Brake Disc								
3.0 DTI 3.5 V6 24V	117 158	07/98→08/99 07/98→08/99	➡			**24.0118-0122.1**	**418122**	Ø 313.5 Brake Disc Thickness [mm] 18 Minimum thickness [mm] 16.6 Vented
VAUXHALL - NOVA Hatchback (S83) 05/83→03/93								
Guide Bolt, brake caliper								
1.0 1.2 1.2 N 1.4 i 1.4 i S 1.4 S 1.5 D 1.5 TD 1.6 GSI 1.6 GSI Cat	33 33 38 44 60 55 37 49 72 74	05/83→03/93 09/89→03/93 01/90→03/93 01/90→03/93 09/91→03/93 01/90→03/93 09/87→03/93 01/90→03/93 09/89→03/93 02/92→03/93	⬅	N4000001→; → 10/92	2	**11.8171-0008.1**	**990049**	ATE
1.2 S 1.6 GSI	40 74	05/83→02/90 05/88→03/92	⬅	N4000001→	2	**11.8171-0008.1**	**990049**	ATE
VAUXHALL - NOVA Saloon (S83) 09/82→12/93								
Guide Bolt, brake caliper								
1.0 1.2 1.2 S 1.4	33 33 40 44 - 60	09/82→10/87 02/92→12/93 09/82→10/87 09/90→08/92	⬅	N4000001→	2	**11.8171-0008.1**	**990049**	ATE
1.4 S 1.5 TD	55 49	01/90→02/93 01/90→02/93	⬅	N4000001→; → 10/92	2	**11.8171-0008.1**	**990049**	ATE
VAUXHALL - NOVAVAN Hatchback Van (S83) 01/90→10/94								
Guide Bolt, brake caliper								
1.2 1.4 1.5 D	38 55 37	01/90→10/94 11/90→03/93 01/91→10/94	⬅	N4000001→; → 10/92	2	**11.8171-0008.1**	**990049**	ATE
VAUXHALL - OMEGA (B) Estate (V94) 12/93→06/03								
Guide Bolt, brake caliper								
2.0 2.0 16V 2.0 Dualfuel	85 100 100	03/94→09/99 03/94→07/01 01/99→07/01	⬅	→ V1999999; not for special-purpose vehicles / not for police vehicles	2	**11.8171-0008.1**	**990049**	ATE
VAUXHALL - OMEGA (B) Saloon (V94) 12/93→07/03								
Guide Bolt, brake caliper								
2.0 2.0 16V 2.0 Dualfuel	85 100 100	03/94→09/99 03/94→07/01 05/98→07/01	⬅	→ V1999999; not for special-purpose vehicles / not for police vehicles	2	**11.8171-0008.1**	**990049**	ATE
VAUXHALL - ROYALE 02/78→08/87								
Guide Bolt, brake caliper								
3.0	132	10/79→10/82		E1019586→	2	**11.8171-0008.1**	**990049**	ATE
VAUXHALL - ROYALE Coupe 02/78→08/86								
Guide Bolt, brake caliper								
3.0	132	10/79→10/82		E1019586→	2	**11.8171-0008.1**	**990049**	ATE

© 2022 Continental Aftermarket & Services GmbH

	kW				! #			
VAUXHALL - SENATOR 02/78→08/87								
Guide Bolt, brake caliper								
2.0 E	85	03/83→10/84		E1019586→; for vehicles with air conditioning	2	**11.8171-0008.1**	**990049**	ATE
2.2 E 2.2 TD	85 63	11/84→08/87 11/84→08/87			2	**11.8171-0008.1**	**990049**	ATE
2.5 2.5 i 3.0 3.0 i	85 103 110 - 115 132	05/78→12/80 09/84→08/87 04/78→08/87 09/84→12/86		E1019586→	2	**11.8171-0008.1**	**990049**	ATE
VAUXHALL - SENATOR Mk II (B) (V88) 09/87→09/93								
Guide Bolt, brake caliper								
2.5 i	103	09/87→10/90	←	09/90→; → L1999999	2	**11.8171-0008.1**	**990049**	ATE
2.6 i 3.0 3.0 i Cat	110 130 130	09/90→09/93 01/88→09/90 01/88→09/93	←	→ L1999999	2	**11.8171-0008.1**	**990049**	ATE
VAUXHALL - SIGNUM (Z03) 03/03→10/08								
Spring, brake caliper								
1.8 1.9 CDTI 1.9 CDTI 16V 2.2 DTI 2.2 i	90 88 110 92 114	06/03→07/05 04/04→03/08 04/04→03/08 05/03→05/08 05/03→05/08	←	for vehicles without sports suspension; GG	2	**11.8116-0356.1**	**390586**	ATE
			←	51066207→; for vehicles with sports suspension	2	**11.8116-0356.1**	**390586**	ATE
1.8	103	08/05→05/08	←	09/05→	2	**11.8116-0356.1**	**390586**	ATE
2.0 DTI	74	05/03→04/04	←	for vehicles without sports suspension; GG	2	**11.8116-0356.1**	**390586**	ATE
2.0 i Turbo	129	03/03→10/08	←	51066207→; → 05/08	2	**11.8116-0356.1**	**390586**	ATE
Guide Bolt, brake caliper								
1.8 1.9 CDTI 1.9 CDTI 16V 2.2 DTI 2.2 i	90 88 110 92 114	06/03→07/05 04/04→03/08 04/04→03/08 05/03→05/08 05/03→05/08		41085481→	2	**11.8171-0008.1**	**990049**	ATE
				→ 51066206; for vehicles with sports suspension	2	**11.8171-0008.1**	**990049**	ATE
				→ 41085480	2	**11.8171-0008.1**	**990049**	ATE
				51066207→; for vehicles with sports suspension	2	**11.8171-0008.1**	**990049**	ATE
				for vehicles without sports suspension	2	**11.8171-0008.1**	**990049**	ATE
1.8 2.8 V6 Turbo	103 169	08/05→05/08 07/05→05/08		09/05→	2	**11.8171-0008.1**	**990049**	ATE
2.0 DTI	74	05/03→04/04		41085481→	2	**11.8171-0008.1**	**990049**	ATE
				→ 41085480	2	**11.8171-0008.1**	**990049**	ATE
				for vehicles without sports suspension	2	**11.8171-0008.1**	**990049**	ATE
2.0 i Turbo	129	03/03→10/08		05/03→; → 41085480	2	**11.8171-0008.1**	**990049**	ATE
				05/03→; → 51066206	2	**11.8171-0008.1**	**990049**	ATE
				41085481→; → 05/08	2	**11.8171-0008.1**	**990049**	ATE
				51066207→; → 05/08	2	**11.8171-0008.1**	**990049**	ATE
2.8 V6 Turbo	184	05/07→10/08		→ 05/08	2	**11.8171-0008.1**	**990049**	ATE
3.0 CDTi 3.2 V6	130 155	05/03→05/08 05/03→05/08		→ 41085480	2	**11.8171-0008.1**	**990049**	ATE
				41085481→	2	**11.8171-0008.1**	**990049**	ATE
				31068239→ 51999999	2	**11.8171-0008.1**	**990049**	ATE
				→ 31068238	2	**11.8171-0008.1**	**990049**	ATE
3.0 V6 CDTI	135	07/05→06/08		09/05→ 05/08	2	**11.8171-0008.1**	**990049**	ATE
VAUXHALL - TIGRA Mk I (S93) 07/94→12/00								
Guide Bolt, brake caliper								
1.4 16V	66	07/94→12/00	←		2	**11.8171-0008.1**	**990049**	ATE
1.6 16V	78	07/94→12/00	←	→ 08/98	2	**11.8171-0008.1**	**990049**	ATE
VAUXHALL - VECTRA (B) Estate (J96) 08/95→03/02								
Guide Bolt, brake caliper								
1.8 Dualfuel 1.8 i 16V	92 85 - 92	09/00→03/02 09/96→03/02		→ W7999999	2	**11.8171-0008.1**	**990049**	ATE
			←	X1000001→	2	**11.8171-0008.1**	**990049**	ATE
2.0 DI 16V	60	08/95→10/01		11/96→; → W7999999	2	**11.8171-0008.1**	**990049**	ATE
			←	X1000001→	2	**11.8171-0008.1**	**990049**	ATE
2.0 DTI 16V	74	08/95→10/01		06/97→; → W7999999	2	**11.8171-0008.1**	**990049**	ATE
			←	X1000001→	2	**11.8171-0008.1**	**990049**	ATE
2.0 Dualfuel	100	10/98→01/01	←		2	**11.8171-0008.1**	**990049**	ATE

© 2022 Continental Aftermarket & Services GmbH

	kW				! #			
VAUXHALL - VECTRA (B) Estate (J96) 08/95→03/02								
Guide Bolt, brake caliper								
2.0 i 16V 2.5 i GSi 2.5 i V6 2.6 i V6	100 143 125 125	10/95→01/01 05/98→09/99 11/96→08/00 09/00→03/02	←		2	**11.8171-0008.1**	**990049**	ATE
2.2 DTI 16V 2.2 i 16V	92 108	08/95→10/01 08/95→10/01	←	09/00→	2	**11.8171-0008.1**	**990049**	ATE
VAUXHALL - VECTRA (B) Hatchback (J96) 08/95→07/03								
Guide Bolt, brake caliper								
1.6 i 1.6 i 16V	55 74	08/95→10/01 08/95→10/01		09/95→; → W7999999	2	**11.8171-0008.1**	**990049**	ATE
			←	X1000001→	2	**11.8171-0008.1**	**990049**	ATE
1.7 TD	60	10/95→11/96			2	**11.8171-0008.1**	**990049**	ATE
1.8 Dualfuel 1.8 i 16V	92 92	09/00→07/03 09/00→07/03		→ W7999999	2	**11.8171-0008.1**	**990049**	ATE
			←	X1000001→; → 04/02	2	**11.8171-0008.1**	**990049**	ATE
1.8 i 16V 2.0 DTi 16V	85 74	09/95→09/00 06/97→10/01		→ W7999999	2	**11.8171-0008.1**	**990049**	ATE
			←	X1000001→	2	**11.8171-0008.1**	**990049**	ATE
2.0 Di 16V	60	08/95→10/01		11/96→; → W7999999	2	**11.8171-0008.1**	**990049**	ATE
			←	X1000001→	2	**11.8171-0008.1**	**990049**	ATE
2.0 Dualfuel 2.0 i 16V 2.5 i GSi 2.5 i V6	100 100 143 125	08/98→01/01 10/95→01/01 03/98→07/00 09/95→08/00	←		2	**11.8171-0008.1**	**990049**	ATE
2.2 DTI 16V	92	08/95→10/01	←	09/00→	2	**11.8171-0008.1**	**990049**	ATE
2.2 i 16V 2.6 i V6	108 125	09/00→07/03 09/00→07/03	←	→ 04/02	2	**11.8171-0008.1**	**990049**	ATE
VAUXHALL - VECTRA (B) Saloon (J96) 08/95→03/02								
Guide Bolt, brake caliper								
1.6 i 1.6 i 16V	55 74	08/95→10/01 08/95→10/01		09/95→; → W7999999	2	**11.8171-0008.1**	**990049**	ATE
			←	X1000001→	2	**11.8171-0008.1**	**990049**	ATE
1.7 TD	60	10/95→11/96			2	**11.8171-0008.1**	**990049**	ATE
1.8 Dualfuel 1.8 i 16V	92 85 - 92	09/00→03/02 10/95→03/02		→ W7999999	2	**11.8171-0008.1**	**990049**	ATE
			←	X1000001→	2	**11.8171-0008.1**	**990049**	ATE
2.0 DI 16V	60	08/95→10/01		11/96→; → W7999999	2	**11.8171-0008.1**	**990049**	ATE
			←	X1000001→	2	**11.8171-0008.1**	**990049**	ATE
2.0 DTI 16V	74	08/95→10/01		06/97→; → W7999999	2	**11.8171-0008.1**	**990049**	ATE
			←	X1000001→	2	**11.8171-0008.1**	**990049**	ATE
2.0 Dualfuel 2.0 i 16V 2.5 i GSi 2.5 i V6 2.6 i V6	100 100 143 125 125	05/98→01/01 10/95→01/01 03/98→07/00 09/95→08/00 09/00→03/02	←		2	**11.8171-0008.1**	**990049**	ATE
2.2 DTI 16V 2.2 i 16V	92 108	08/95→10/01 08/95→10/01	←	09/00→	2	**11.8171-0008.1**	**990049**	ATE
VAUXHALL - VECTRA Mk II (C) (Z02) 01/00→10/08								
Spring, brake caliper								
1.8	103	01/06→07/08	←	for vehicles with sports suspension; GG	2	**11.8116-0356.1**	**390586**	ATE
			←	for vehicles with sports suspension; for police vehicles	2	**11.8116-0356.1**	**390586**	ATE
1.8 16V 1.8 16V Dualfuel 2.2 DTI 16V	90 90 92	04/02→07/08 04/02→07/08 04/02→10/08	←	for vehicles without sports suspension; GG	2	**11.8116-0356.1**	**390586**	ATE
1.9 CDTI	88	04/02→09/08	←	04/04→; GG	2	**11.8116-0356.1**	**390586**	ATE
1.9 CDTI 16V 2.0 DTI 16V	110 74	04/04→08/08 04/02→10/08	←	GG	2	**11.8116-0356.1**	**390586**	ATE
2.2 16V	108	01/02→10/08	←	04/02→; for vehicles without sports suspension; GG	2	**11.8116-0356.1**	**390586**	ATE
2.2 direct	114	01/02→10/08	←	10/03→; for vehicles without sports suspension; GG	2	**11.8116-0356.1**	**390586**	ATE
Guide Bolt, brake caliper								
1.8	103	01/06→07/08			2	**11.8171-0008.1**	**990049**	ATE
				Internally Vented	2	**11.8171-0008.1**	**990049**	ATE
				for vehicles with sports suspension; for police vehicles	2	**11.8171-0008.1**	**990049**	ATE

© 2022 Continental Aftermarket & Services GmbH

	kW				! #			
VAUXHALL - VECTRA Mk II (C) (Z02) 01/00→10/08								
Guide Bolt, brake caliper								
1.8	103	01/06→07/08		for vehicles with sports suspension	2	**11.8171-0008.1**	**990049**	ATE
1.8 16V	90	04/02→07/08			2	**11.8171-0008.1**	**990049**	ATE
1.8 16V Dualfuel	90	04/02→07/08			2	**11.8171-0008.1**	**990049**	ATE
1.9 CDTI 16V	110	04/04→08/08						
2.0 DTI 16V	74	04/02→10/08		Vented	2	**11.8171-0008.1**	**990049**	ATE
2.2 DTI 16V	92	04/02→10/08						
1.9 CDTI	88	04/02→09/08		04/04→	2	**11.8171-0008.1**	**990049**	ATE
				04/04→; Vented	2	**11.8171-0008.1**	**990049**	ATE
				04/04→	2	**11.8171-0008.1**	**990049**	ATE
2.0 16V Turbo	129	01/00→10/08		03/03→	2	**11.8171-0008.1**	**990049**	ATE
				03/03→; Vented	2	**11.8171-0008.1**	**990049**	ATE
				03/03→	2	**11.8171-0008.1**	**990049**	ATE
2.2 16V	108	01/02→10/08		04/02→	2	**11.8171-0008.1**	**990049**	ATE
				04/02→; Vented	2	**11.8171-0008.1**	**990049**	ATE
				04/02→	2	**11.8171-0008.1**	**990049**	ATE
2.2 direct	114	01/02→10/08		10/03→; Vented	2	**11.8171-0008.1**	**990049**	ATE
				10/03→	2	**11.8171-0008.1**	**990049**	ATE
				10/03→	2	**11.8171-0008.1**	**990049**	ATE
3.0 CDTi	135	08/05→07/08			2	**11.8171-0008.1**	**990049**	ATE
				Internally Vented	2	**11.8171-0008.1**	**990049**	ATE
				61000001→	2	**11.8171-0008.1**	**990049**	ATE
3.0 V6 CDTI	130	06/03→08/05			2	**11.8171-0008.1**	**990049**	ATE
3.2 V6	155	06/03→07/08		Vented	2	**11.8171-0008.1**	**990049**	ATE
				→ 31070293	2	**11.8171-0008.1**	**990049**	ATE
				31070294→	2	**11.8171-0008.1**	**990049**	ATE
VAUXHALL - VECTRA Mk II (C) Estate (Z02) 10/03→05/09								
Spring, brake caliper								
1.8	103	01/06→07/08		for vehicles with sports suspension; for police vehicles	2	**11.8116-0356.1**	**390586**	ATE
			←	for vehicles with sports suspension; not for police vehicles; GG	2	**11.8116-0356.1**	**390586**	ATE
1.8 16V	90	10/03→08/05	←	for vehicles without sports suspension; GG	2	**11.8116-0356.1**	**390586**	ATE
2.2 direct	114	10/03→07/08						
2.2 DTI 16V	92	10/03→07/08						
1.9 CDTI	88	04/04→07/08		for vehicles with sports suspension; for police vehicles	2	**11.8116-0356.1**	**390586**	ATE
			←	for vehicles without sports suspension; not for police vehicles; GG	2	**11.8116-0356.1**	**390586**	ATE
1.9 CDTI 16V	110	04/04→05/09	←	→ 10/08; GG	2	**11.8116-0356.1**	**390586**	ATE
2.0 DTI 16V	74	10/03→07/08	←	GG	2	**11.8116-0356.1**	**390586**	ATE
Guide Bolt, brake caliper								
1.8	103	01/06→07/08		→ 41085480; Internally Vented	2	**11.8171-0008.1**	**990049**	ATE
				41085481→	2	**11.8171-0008.1**	**990049**	ATE
				→ 41085480	2	**11.8171-0008.1**	**990049**	ATE
				for vehicles with sports suspension; for police vehicles	2	**11.8171-0008.1**	**990049**	ATE
				for vehicles with sports suspension; not for police vehicles	2	**11.8171-0008.1**	**990049**	ATE
1.8 16V	90	10/03→08/05		41085481→	2	**11.8171-0008.1**	**990049**	ATE
2.0 16V Turbo	129	10/03→07/08			2	**11.8171-0008.1**	**990049**	ATE
2.0 DTI 16V	74	10/03→07/08						
2.2 direct	114	10/03→07/08		→ 41085480	2	**11.8171-0008.1**	**990049**	ATE
2.2 DTI 16V	92	10/03→07/08		Vented; → 41085480	2	**11.8171-0008.1**	**990049**	ATE
1.9 CDTI	88	04/04→07/08		Vented; → 41085480	2	**11.8171-0008.1**	**990049**	ATE
				41085481→	2	**11.8171-0008.1**	**990049**	ATE
				→ 41085480	2	**11.8171-0008.1**	**990049**	ATE
				for vehicles without sports suspension; not for police vehicles	2	**11.8171-0008.1**	**990049**	ATE
				for vehicles with sports suspension; for police vehicles	2	**11.8171-0008.1**	**990049**	ATE
1.9 CDTI 16V	110	04/04→05/09		41085481→; → 10/08	2	**11.8171-0008.1**	**990049**	ATE
				→ 10/08	2	**11.8171-0008.1**	**990049**	ATE
				→ 41085480	2	**11.8171-0008.1**	**990049**	ATE
				Vented; → 41085480	2	**11.8171-0008.1**	**990049**	ATE
2.8 V6 Turbo	169	08/05→05/09		41085481→	2	**11.8171-0008.1**	**990049**	ATE

	kW				! #			
VAUXHALL - VECTRA Mk II (C) Estate (Z02) 10/03→05/09								
Guide Bolt, brake caliper								
2.8 V6 Turbo	169	08/05→05/09		61000001→	2	**11.8171-0008.1**	**990049**	ATE
2.8 V6 Turbo	188	08/06→05/09			2	**11.8171-0008.1**	**990049**	ATE
				61000001→	2	**11.8171-0008.1**	**990049**	ATE
2.8 V6 Turbo	206	10/06→05/09			2	**11.8171-0008.1**	**990049**	ATE
3.0 CDTi	135	08/05→07/08		41085481→	2	**11.8171-0008.1**	**990049**	ATE
					2	**11.8171-0008.1**	**990049**	ATE
				→ 41085480	2	**11.8171-0008.1**	**990049**	ATE
				→ 41085480; Internally Vented	2	**11.8171-0008.1**	**990049**	ATE
3.0 V6 CDTI	130	10/03→08/05		41085481→	2	**11.8171-0008.1**	**990049**	ATE
3.2 V6	155	10/03→08/05		31070294→	2	**11.8171-0008.1**	**990049**	ATE
				→ 31070293	2	**11.8171-0008.1**	**990049**	ATE
				→ 41085480	2	**11.8171-0008.1**	**990049**	ATE
				Vented; → 41085480	2	**11.8171-0008.1**	**990049**	ATE
VAUXHALL - VECTRA Mk II (C) GTS (Z02) 08/02→05/09								
Spring, brake caliper								
1.8	103	01/06→07/08	←	for vehicles with sports suspension; GG	2	**11.8116-0356.1**	**390586**	ATE
			←	for vehicles with sports suspension; for police vehicles	2	**11.8116-0356.1**	**390586**	ATE
1.8 16V 1.8 16V Dualfuel 2.2 16V 2.2 direct 2.2 DTI 16V	90 90 108 114 92	08/02→07/08 08/02→07/08 08/02→07/08 10/03→08/05 08/02→07/08	←	for vehicles without sports suspension; GG	2	**11.8116-0356.1**	**390586**	ATE
1.9 CDTI	88	08/02→07/08	←	04/04→; GG	2	**11.8116-0356.1**	**390586**	ATE
1.9 CDTI 16V 2.0 DTI 16V	110 74	04/04→07/08 08/02→07/08	←	GG	2	**11.8116-0356.1**	**390586**	ATE
Guide Bolt, brake caliper								
1.8	103	01/06→07/08			2	**11.8171-0008.1**	**990049**	ATE
				Internally Vented	2	**11.8171-0008.1**	**990049**	ATE
				for vehicles with sports suspension	2	**11.8171-0008.1**	**990049**	ATE
				for vehicles with sports suspension; for police vehicles	2	**11.8171-0008.1**	**990049**	ATE
1.8 16V 1.8 16V Dualfuel 1.9 CDTI 16V 2.0 16V Turbo 2.0 DTI 16V 2.2 16V 2.2 direct 2.2 DTI 16V	90 90 110 129 74 108 114 92	08/02→07/08 08/02→07/08 04/04→07/08 03/03→07/08 08/02→07/08 08/02→07/08 10/03→08/05 08/02→07/08			2	**11.8171-0008.1**	**990049**	ATE
				Vented	2	**11.8171-0008.1**	**990049**	ATE
1.9 CDTI	88	08/02→07/08		04/04→	2	**11.8171-0008.1**	**990049**	ATE
				04/04→	2	**11.8171-0008.1**	**990049**	ATE
				04/04→; Vented	2	**11.8171-0008.1**	**990049**	ATE
2.8 V6 Turbo	169 - 184	08/05→05/09			2	**11.8171-0008.1**	**990049**	ATE
				Internally Vented	2	**11.8171-0008.1**	**990049**	ATE
				61000001→; - OPC / -VXR	2	**11.8171-0008.1**	**990049**	ATE
				61000001→; + OPC / +VXR	2	**11.8171-0008.1**	**990049**	ATE
2.8 V6 Turbo	188 - 206	08/05→05/09			2	**11.8171-0008.1**	**990049**	ATE
				61000001→	2	**11.8171-0008.1**	**990049**	ATE
3.0 CDTi	135	08/05→07/08			2	**11.8171-0008.1**	**990049**	ATE
				Internally Vented	2	**11.8171-0008.1**	**990049**	ATE
				61000001→	2	**11.8171-0008.1**	**990049**	ATE
3.0 V6 CDTI	130	06/03→08/05		Vented	2	**11.8171-0008.1**	**990049**	ATE
3.2 V6	155	08/02→07/08			2	**11.8171-0008.1**	**990049**	ATE
				→ 31070293	2	**11.8171-0008.1**	**990049**	ATE
				31070294→	2	**11.8171-0008.1**	**990049**	ATE
VAUXHALL - VIVA (C16) 01/15→03/19								
Wheel Brake Cylinder								
1.0	54 - 55	01/15→03/19	→		2	**24.3220-1759.3**	**020609**	ALU
1.0 LPG	54	06/15→03/18						

© 2022 Continental Aftermarket & Services GmbH

	kW				! #			
VAUXHALL - ZAFIRA A (T98) 11/98→08/05								
Guide Bolt, brake caliper								
1.6 16V 1.8 16V 1.8 Dualfuel 2.0 DI 16V	74 92 92 60	04/99→08/05 09/00→08/05 09/00→08/05 10/99→08/05	←	→ 06/05	2	**11.8171-0008.1**	**990049**	ATE
1.6 CNG 1.8 16V 2.0 2.0 GSI Turbo	71 85 147 141	09/01→06/05 05/99→08/00 06/02→06/05 09/01→06/05	←		2	**11.8171-0008.1**	**990049**	ATE
1.6 Dualfuel	74	11/98→08/05	←	04/99→ 06/05	2	**11.8171-0008.1**	**990049**	ATE
2.0 DTI 16V	74	04/99→08/05	←	06/00→ 06/05	2	**11.8171-0008.1**	**990049**	ATE
2.2 16V	108	11/98→08/04	←	09/00→	2	**11.8171-0008.1**	**990049**	ATE
VAUXHALL - ZAFIRA Mk II (B) (A05) 04/05→11/14								
Spring, brake caliper								
2.0	176	01/06→11/14	←		2	**11.8116-0356.1**	**390586**	ATE
Guide Bolt, brake caliper								
1.6 1.9 CDTI 2.0 2.2	77 - 85 88 - 110 147 - 176 110	07/05→11/14 07/05→11/14 07/05→11/14 07/05→11/14			2	**11.8171-0008.1**	**990049**	ATE
1.7 CDTI	81 - 92	01/08→11/14		for brake disc diameter [mm]: 308	2	**11.8171-0008.1**	**990049**	ATE
				for brake disc diameter [mm]: 280	2	**11.8171-0008.1**	**990049**	ATE
1.8	88	04/13→11/14		06/13→; for brake disc diameter [mm]: 280	2	**11.8171-0008.1**	**990049**	ATE
				06/13→; for brake disc diameter [mm]: 308	2	**11.8171-0008.1**	**990049**	ATE
1.8	103	04/05→11/14		07/05→; for brake disc diameter [mm]: 280	2	**11.8171-0008.1**	**990049**	ATE
				07/05→; for brake disc diameter [mm]: 308	2	**11.8171-0008.1**	**990049**	ATE
VAUXHALL - ZAFIRA Mk III (P12) 10/11→08/18								
Brake Hose								
1.4	88 - 103	10/11→08/18	←	Rim Size [in]: 16;		**24.5176-0415.3**	**331618**	L= 415
1.6 CDTi 1.6 CNG 1.6 SIDI 1.8 2.0 BiTurbo CDTI 2.0 CDTi	99 - 100 110 147 85 - 103 143 81 - 125	03/13→08/18 10/11→08/18 07/13→08/18 10/11→08/18 11/12→08/18 10/11→08/18	←	Rim Size [in]: 17;		**24.5176-0444.3**	**331619**	L= 445
VOLVO - 440 (445) 08/88→12/96								
Guide Bolt, brake caliper								
1.6 1.7 1.8 1.9 Turbo-Diesel	61 - 69 75 - 78 66 66	09/88→12/96 09/88→12/96 08/91→12/96 07/94→12/96	→		2	**11.8171-0008.1**	**990049**	ATE
1.7 Turbo	88 - 90	08/88→12/96			2	**11.8171-0008.1**	**990049**	ATE
2.0	81	08/92→07/95	→		2	**11.8171-0008.1**	**990049**	ATE
2.0	80	08/93→07/96			2	**11.8171-0008.1**	**990049**	ATE
VOLVO - 460 (464) 09/88→12/96								
Guide Bolt, brake caliper								
1.7 1.8 1.9 Turbo-Diesel	75 - 80 66 66	08/89→07/92 08/91→07/96 07/94→07/96	→		2	**11.8171-0008.1**	**990049**	ATE
1.7 Turbo	88 - 90	08/89→07/96			2	**11.8171-0008.1**	**990049**	ATE
2.0	81	08/92→07/95	→		2	**11.8171-0008.1**	**990049**	ATE
2.0	80	08/93→07/96			2	**11.8171-0008.1**	**990049**	ATE

	kW				! #			
VOLVO - 480 (482) 04/86→07/96								
Guide Bolt, brake caliper								
1.7	70 - 80	04/86→07/96	➡		2	**11.8171-0008.1**	**990049**	ATE
1.7 Turbo	88 - 90	08/87→07/96			2	**11.8171-0008.1**	**990049**	ATE
2.0	81	08/92→09/95	➡		2	**11.8171-0008.1**	**990049**	ATE
VOLVO - 850 (854) 06/91→10/97								
Guide Bolt, brake caliper								
2.0	93 - 105	06/91→12/96	⬅		2	**11.8171-0008.1**	**990049**	ATE
2.0 Turbo	132 - 155	08/93→12/96						
2.3 T5	166	08/93→07/96						
2.3 T5 R	176	04/96→10/96						
2.3 T5-R	184	08/95→12/96						
2.4	103 - 125	06/91→12/96						
2.5 TDI	103	08/95→12/96						
2.3 Turbo R	177	06/95→10/96	⬅	08/95→	2	**11.8171-0008.1**	**990049**	ATE
2.3 Turbo R	179	09/94→10/97	⬅	08/95→ 12/96	2	**11.8171-0008.1**	**990049**	ATE
VOLVO - 850 Estate (855) 04/92→10/97								
Guide Bolt, brake caliper								
2.0	93 - 105	02/93→12/96	⬅		2	**11.8171-0008.1**	**990049**	ATE
2.0 Turbo	155	02/93→12/96						
2.3 T5	166	02/93→12/96						
2.3 T5 R	176	04/96→10/96						
2.3 T5-R	184	08/95→12/96						
2.4	103 - 125	08/92→12/96						
2.4 AWD	142	04/96→12/96						
2.5 TDI	103	08/95→12/96						
2.0 Turbo	132	09/93→10/97	⬅	→ 12/96	2	**11.8171-0008.1**	**990049**	ATE
2.3 Turbo R	177	06/95→10/97	⬅	08/95→ 12/96	2	**11.8171-0008.1**	**990049**	ATE
VOLVO - C30 (533) 09/06→12/13								
Spring, brake caliper								
1.6	74	10/06→12/12	⬅		2	**11.8116-0356.1**	**390586**	ATE
1.6 D	80	10/06→12/12						
1.6 D2	84	10/10→12/12						
1.8	92	10/06→12/12						
2.0	107	10/06→12/12						
2.0 D	100	10/06→12/12						
2.0 FlexFuel	107	01/10→12/12						
2.4 i	125	10/06→12/12						
D3	110	10/10→12/12						
D4	130	10/10→12/12						
D5	120 - 132	10/06→12/12						
Electric	82 - 89	12/10→12/12						
T5	162 - 184	10/06→12/13						
1.8 FlexFuel	92	01/07→12/12	⬅	04/07→	2	**11.8116-0356.1**	**390586**	ATE
Guide Bolt, brake caliper								
1.6	74	10/06→12/12			2	**11.8171-0008.1**	**990049**	ATE
1.6 D	80	10/06→12/12						
1.6 D2	84	10/10→12/12		146187→	2	**11.8171-0008.1**	**990049**	ATE
1.8	92	10/06→12/12		→ 146186	2	**11.8171-0008.1**	**990049**	ATE
2.0	107	10/06→12/12						
2.0 D	100	10/06→12/12						
2.0 FlexFuel	107	01/10→12/12						
2.4 i	125	10/06→12/12						
D3	110	10/10→12/12						
D4	130	10/10→12/12						
D5	120 - 132	10/06→12/12						
T5	162 - 184	10/06→12/13						
1.8 FlexFuel	92	01/07→12/12		04/07→	2	**11.8171-0008.1**	**990049**	ATE
				146187→	2	**11.8171-0008.1**	**990049**	ATE
				04/07→; → 146186	2	**11.8171-0008.1**	**990049**	ATE
Electric	82 - 89	12/10→12/12			2	**11.8171-0008.1**	**990049**	ATE
				128→	2	**11.8171-0008.1**	**990049**	ATE

© 2022 Continental Aftermarket & Services GmbH

	kW				! #			
VOLVO - C30 (533) 09/06→12/13								
Guide Bolt, brake caliper								
Electric	82 - 89	12/10→12/12		→ 127	2	**11.8171-0008.1**	**990049**	ATE
Brake Pad Set, disc brake								
1.6 1.6 D 1.6 D2 1.8 2.0 2.0 D 2.0 FlexFuel 2.4 i D3 D4 D5 Electric T5	74 80 84 92 107 100 107 125 110 130 120 - 132 82 - 89 162 - 184	10/06→12/12 10/06→12/12 10/10→12/12 10/06→12/12 10/06→12/12 10/06→12/12 01/10→12/12 10/06→12/12 10/10→12/12 10/10→12/12 10/06→12/12 12/10→12/12 10/06→12/13	←	Rim Size [in]: 15 / 16		**13.0460-7193.2** **13.0470-7193.2**	**607193** **LD7193**	ATE 23723 18,1 - WE / - WK ATE 23723 18,1 - WE / - WK Ceramic
1.8 FlexFuel	92	01/07→12/12	←	04/07→; Rim Size [in]: 15 / 16		**13.0460-7193.2** **13.0470-7193.2**	**607193** **LD7193**	ATE 23723 18,1 - WE / - WK ATE 23723 18,1 - WE / - WK Ceramic
VOLVO - C70 I Coupe (872) 03/97→09/02								
Brake Pad Set, disc brake								
2.0 2.0 T 2.3 T-5 2.4 T	132 166 176 142	03/97→09/02 03/97→09/02 03/97→09/02 03/97→09/02	←	→ 12/98; Rim Size [in]: 15 / 16		**13.0460-7193.2** **13.0470-7193.2**	**607193** **LD7193**	ATE 23723 18,1 - WE / - WK ATE 23723 18,1 - WE / - WK Ceramic
VOLVO - C70 II Convertible (542) 03/06→12/13								
Spring, brake caliper								
2.0 D	100	01/08→10/09	←	06/08→	2	**11.8116-0356.1**	**390586**	ATE
2.4 2.4 D 2.4 i D3 D4 D5 T5	103 120 125 110 130 132 162 - 169	03/06→10/09 03/07→06/13 03/06→10/09 10/10→06/13 10/10→06/13 03/06→06/13 03/06→06/13	←		2	**11.8116-0356.1**	**390586**	ATE
Guide Bolt, brake caliper								
2.0 D	100	01/08→10/09		77107→	2	**11.8171-0008.1**	**990049**	ATE
				06/08→; → 77106	2	**11.8171-0008.1**	**990049**	ATE
2.4 2.4 D 2.4 i D3 D4 D5 T5	103 120 125 110 130 132 162 - 169	03/06→10/09 03/07→06/13 03/06→10/09 10/10→06/13 10/10→06/13 03/06→06/13 03/06→06/13		77107→	2	**11.8171-0008.1**	**990049**	ATE
				→ 77106	2	**11.8171-0008.1**	**990049**	ATE
Brake Pad Set, disc brake								
2.0 D	100	01/08→10/09	←	06/08→; not for rim size [in]: 17		**13.0460-7193.2** **13.0470-7193.2**	**607193** **LD7193**	ATE 23723 18,1 - WE / - WK ATE 23723 18,1 - WE / - WK Ceramic
2.4 2.4 D 2.4 i D3 D4 D5 T5	103 120 125 110 130 132 162 - 169	03/06→10/09 03/07→06/13 03/06→10/09 10/10→06/13 10/10→06/13 03/06→06/13 03/06→06/13	←	not for rim size [in]: 17		**13.0460-7193.2** **13.0470-7193.2**	**607193** **LD7193**	ATE 23723 18,1 - WE / - WK ATE 23723 18,1 - WE / - WK Ceramic
VOLVO - S40 II (544) 12/03→12/12								
Spring, brake caliper								
1.6 1.6 D 1.6 D2 2.0 2.0 F D3 D4	74 81 84 107 107 110 130	01/05→12/12 01/05→12/12 10/10→12/12 10/06→12/12 10/09→12/12 10/10→12/12 10/10→12/12	←	→ 05/12	2	**11.8116-0356.1**	**390586**	ATE

	kW				! #			
VOLVO - S40 II (544) 12/03→12/12								
Spring, brake caliper								
T5	169	03/07→12/12		→ 05/12	2	**11.8116-0356.1**	**390586**	ATE
1.8 2.0 CDI 2.0 D 2.0 D4 2.4 2.4 CDI 2.4 D5 T5 T5 AWD	92 98 100 96 103 - 125 120 132 162 162 - 169	04/04→12/10 07/05→12/06 01/04→12/10 07/05→12/06 01/04→12/12 03/07→12/10 03/06→12/10 01/04→12/07 04/04→12/10			2	**11.8116-0356.1**	**390586**	ATE
1.8 FlexFuel	92	01/06→12/10		04/07→	2	**11.8116-0356.1**	**390586**	ATE
Guide Bolt, brake caliper								
1.6 1.6 D 1.6 D2 2.0 2.0 F D3 D4 T5	74 81 84 107 107 110 130 169	01/05→12/12 01/05→12/12 10/10→12/12 10/06→12/12 10/09→12/12 10/10→12/12 10/10→12/12 03/07→12/12		→ 05/12	2	**11.8171-0008.1**	**990049**	ATE
				462753→; → 05/12	2	**11.8171-0008.1**	**990049**	ATE
				→ 462752	2	**11.8171-0008.1**	**990049**	ATE
1.8 2.0 CDI 2.0 D 2.0 D4 2.4 2.4 CDI 2.4 D5 T5 T5 AWD	92 98 100 96 103 - 125 120 132 162 162 - 169	04/04→12/10 07/05→12/06 01/04→12/10 07/05→12/06 01/04→12/12 03/07→12/10 03/06→12/10 01/04→12/07 04/04→12/10			2	**11.8171-0008.1**	**990049**	ATE
				462753→	2	**11.8171-0008.1**	**990049**	ATE
				→ 462752	2	**11.8171-0008.1**	**990049**	ATE
1.8 FlexFuel	92	01/06→12/10		04/07→	2	**11.8171-0008.1**	**990049**	ATE
				462753→	2	**11.8171-0008.1**	**990049**	ATE
				04/07→; → 462752	2	**11.8171-0008.1**	**990049**	ATE
Brake Pad Set, disc brake								
1.6 1.6 D 1.6 D2 2.0 2.0 F D3 D4 T5	74 81 84 107 107 110 130 169	01/05→12/12 01/05→12/12 10/10→12/12 10/06→12/12 10/09→12/12 10/10→12/12 10/10→12/12 03/07→12/12		→ 05/12; not for rim size [in]: 17		**13.0460-7193.2** **13.0470-7193.2**	**607193** **LD7193**	ATE 23723 18,1 - WE / - WK ATE 23723 18,1 - WE / - WK Ceramic
1.8 2.0 CDI 2.0 D 2.0 D4 2.4 2.4 CDI 2.4 D5 T5 T5 AWD	92 98 100 96 103 - 125 120 132 162 162 - 169	04/04→12/10 07/05→12/06 01/04→12/10 07/05→12/06 01/04→12/12 03/07→12/10 03/06→12/10 01/04→12/07 04/04→12/10		not for rim size [in]: 17		**13.0460-7193.2** **13.0470-7193.2**	**607193** **LD7193**	ATE 23723 18,1 - WE / - WK ATE 23723 18,1 - WE / - WK Ceramic
1.8 FlexFuel	92	01/06→12/10		04/07→; not for rim size [in]: 17		**13.0460-7193.2** **13.0470-7193.2**	**607193** **LD7193**	ATE 23723 18,1 - WE / - WK ATE 23723 18,1 - WE / - WK Ceramic
VOLVO - S60 I (384) 07/00→04/10								
Guide Bolt, brake caliper								
2.0 T	132	07/00→04/10		09/01→ 01/09	2	**11.8171-0008.1**	**990049**	ATE
2.3 T5 2.4 2.4 CDI 2.4 D	195 132 85 90	07/00→09/02 01/05→10/06 10/03→12/05 05/05→12/06			2	**11.8171-0008.1**	**990049**	ATE
2.4 2.4 T	103 147	07/00→04/10 07/00→04/10		11/00→ 01/09	2	**11.8171-0008.1**	**990049**	ATE
2.4 2.4 D 2.4 T5	125 120 191	11/00→04/10 07/05→12/09 04/04→04/10		→ 01/09	2	**11.8171-0008.1**	**990049**	ATE
2.4 Bifuel	103	07/01→04/10		06/02→ 01/09	2	**11.8171-0008.1**	**990049**	ATE
2.4 D 2.4 D5	93 136	03/05→04/10 03/05→04/10		09/05→ 01/09	2	**11.8171-0008.1**	**990049**	ATE

© 2022 Continental Aftermarket & Services GmbH

	kW				! #			
VOLVO - S60 I (384) 07/00→04/10								
Guide Bolt, brake caliper								
2.4 D	96	05/01→04/10	←	12/01→ 01/09	2	**11.8171-0008.1**	**990049**	ATE
2.4 D5	120	01/01→04/10	←	07/01→ 01/09	2	**11.8171-0008.1**	**990049**	ATE
2.4 T AWD	147	06/01→04/10	←	11/01→ 01/09	2	**11.8171-0008.1**	**990049**	ATE
2.5 T	154	01/03→04/10	←	02/04→ 01/09	2	**11.8171-0008.1**	**990049**	ATE
2.5 T AWD	154	07/02→04/10	←	04/04→ 01/09	2	**11.8171-0008.1**	**990049**	ATE
T5	184	07/00→04/10	←	08/00→ 04/04	2	**11.8171-0008.1**	**990049**	ATE
VOLVO - S60 II (134) 04/10→12/18								
Guide Bolt, brake caliper								
1.5 T2 1.5 T3 2.0 D2 2.0 D3 2.0 D4 2.0 D5 2.0 T 2.0 T3 2.0 T5 DRIVe 2.4 D4 AWD 2.5 T 2.5 T5 2.5 T5 AWD D3 D4 D4 Drive-E Polestar D4 Polestar AWD D5 D5 AWD D5 Drive-E Polestar DRIVe / D2 T3 T4 T4F T5 T5 AWD T5 Drive-E Polestar AWD T6 T6 AWD	90 112 88 110 140 165 149 112 180 140 183 186 183 - 186 100 - 120 133 147 162 151 - 169 151 - 169 171 84 110 132 132 177 - 225 180 - 187 186 225 224 - 242	10/15→05/18 03/15→05/18 03/15→05/18 03/15→05/18 03/15→05/18 03/15→05/18 04/10→12/11 03/15→05/18 09/14→12/15 03/15→05/18 01/13→01/16 09/11→12/15 09/12→12/18 04/10→12/15 09/13→12/15 03/15→05/18 03/15→07/18 04/10→12/15 04/10→12/15 03/15→05/18 01/11→12/15 04/10→12/15 04/10→12/15 04/11→12/15 04/10→12/18 07/14→12/18 06/16→05/18 09/13→12/18 04/10→12/18	←	for brake disc diameter [mm]: 300	2	**11.8171-0008.1**	**990049**	ATE
2.0 T	132	05/12→12/15	←	12/13→; for brake disc diameter [mm]: 300	2	**11.8171-0008.1**	**990049**	ATE
2.0 T4	140	03/15→05/18	←	05/15→; for brake disc diameter [mm]: 300	2	**11.8171-0008.1**	**990049**	ATE
D4	120	04/10→12/14	←	05/12→; for brake disc diameter [mm]: 300	2	**11.8171-0008.1**	**990049**	ATE
D5 D5 AWD	158 158	04/11→12/15 04/11→12/15	←	06/11→; for brake disc diameter [mm]: 300	2	**11.8171-0008.1**	**990049**	ATE
VOLVO - S60 III (224) 02/19→								
Guide Bolt, brake caliper								
B3 MHEV B4 Mild-Hybrid B5 Mild-Hybrid B5 Mild-Hybrid AWD T4 T4 Polestar T5 T5 AWD T5 Polestar T6 AWD	120 145 184 184 140 155 184 183 - 187 186 228	03/20→ 03/20→ 03/20→ 03/20→ 02/19→ 07/19→ 02/19→ 02/19→ 07/19→ 05/19→	← →	Brake Size: 16" / 17"		**11.8171-0008.1** **11.8171-0008.1**	**990049** **990049**	ATE ATE
T6 Drive-E Polestar AWD T6 Hybrid Polestar AWD T6 Twin Engine AWD T8 Plug-in Hybrid AWD T8 Twin Engine AWD T8 Twin Engine Polestar AWD	233 245 186 235 223 233	02/19→ 05/19→ 02/19→ 05/19→ 02/19→ 10/19→	← →	Brake Size: 17"		**11.8171-0008.1** **11.8171-0008.1**	**990049** **990049**	ATE ATE

	kW				! #			
VOLVO - S70 (874) 11/96→11/00								
Guide Bolt, brake caliper								
2.0	93 - 132	01/97→11/00	←		2	**11.8171-0008.1**	**990049**	ATE
2.0 Turbo	155 - 166	01/97→11/00						
2.3	195	04/99→09/00						
2.3 T-5	176	01/97→11/00						
2.3 Turbo	184	01/97→11/00						
2.4	103 - 125	01/97→11/00						
2.4 AWD	103 - 121	11/96→09/00						
2.4 Bifuel	106	10/98→11/00						
2.4 Blu-Fuel	103	07/97→09/00						
2.4 T5 AWD	142	11/96→04/99						
2.4 Turbo	142	01/97→11/00						
2.5 TDI	103	01/97→11/00						
2.5 TDi AWD	103	10/99→09/00						
2.3	177	11/96→11/00	←	01/97→	2	**11.8171-0008.1**	**990049**	ATE
2.4 AWD	125	04/99→09/00	←	→ 05/99	2	**11.8171-0008.1**	**990049**	ATE
2.4 Bifuel	103	07/99→11/00	←	→ 09/00	2	**11.8171-0008.1**	**990049**	ATE
			←		2	**11.8171-0008.1**	**990049**	ATE
VOLVO - S80 I (184) 05/98→02/08								
Guide Bolt, brake caliper								
2.0	120	06/98→07/06		→ 02/06	2	**11.8171-0008.1**	**990049**	ATE
2.0 T	132 - 166	06/98→07/06						
2.4	103 - 125	01/99→07/06						
2.4 Bifuel	103	09/01→07/06						
2.4 D	96	10/01→07/06						
2.4 D5	120	08/01→07/06						
2.4 T	147	06/00→07/06						
2.5 T AWD	154	07/03→07/06						
2.5 TDI	103	01/99→07/06						
2.9	147 - 150	05/98→07/06						
2.9 T6	200	06/01→07/06						
3.0	144	06/01→07/06						
3.0 T6	200	06/01→07/06						
2.3 R	195	04/00→08/05			2	**11.8171-0008.1**	**990049**	ATE
2.8 T6	200	05/98→12/01						
2.4 T5 AWD	147	04/00→09/03		06/00→	2	**11.8171-0008.1**	**990049**	ATE
2.5 T	154	03/03→07/06		07/03→ 02/06	2	**11.8171-0008.1**	**990049**	ATE
VOLVO - S80 II (124) 03/06→12/16								
Guide Bolt, brake caliper								
1.6 D2	85	01/14→12/16			2	**11.8171-0008.1**	**990049**	ATE
1.6 D DRIVe	80	01/10→12/11						
1.6 DRIVe	84	06/11→01/14						
2.0	107	01/08→09/12						
2.0 Drive- E	180	12/14→12/16						
2.0 FlexFuel	107	01/08→12/11						
2.0 T	149	01/10→05/11						
2.0 T5	162	01/14→12/16						
2.0 TDi	100	02/08→03/11						
2.4 D	120 - 129	03/06→03/11						
2.5 T	147 - 187	03/06→12/16						
2.5 T AWD	147	10/06→04/09						
2.5 T FlexFuel	147 - 170	05/08→12/11						
3.2	175 - 179	03/06→12/14						
3.2 AWD	175 - 179	01/07→12/12						
3.2 Flexifuel AWD	177	01/09→03/10						
4.4 V8 AWD	232	03/06→03/12						
D3	100	05/12→05/14						
D3 / D4	120	01/10→12/16						
D4	133	09/13→12/16						
D5	136 - 158	03/06→04/15						
D5 AWD	136 - 158	01/07→04/15						
T4	132	10/10→04/14						
T4F	132	05/11→01/14						
T5	177 - 180	10/10→12/16						

© 2022 Continental Aftermarket & Services GmbH

	kW				! #			
VOLVO - S80 II (124) 03/06→12/16								
Guide Bolt, brake caliper								
T6 AWD	210 - 224	01/07→12/16			2	**11.8171-0008.1**	**990049**	ATE
VOLVO - S90 II (234) 01/16→								
Guide Bolt, brake caliper								
2.0 D3 D4 D4 AWD D4 Drive-E Polestar D4 Drive-E Polestar AWD D5 AWD D5 Polestar AWD T4 T4 Polestar T5 T5 Drive-E Polestar T6 AWD T6 Drive-E Polestar AWD T8 Hybrid AWD T8 Hybrid Polestar AWD T8 Plug-in Hybrid AWD T8 Plug-in Hybrid Polestar AWD	183 110 120 - 140 140 147 147 173 177 140 155 184 - 187 186 - 192 228 - 235 240 - 246 223 233 235 246	03/16→ 03/16→08/18 03/16→ 03/16→ 03/16→ 03/16→ 03/16→ 06/19→ 10/17→ 06/19→ 03/16→ 03/16→ 03/16→ 03/16→ 04/18→ 01/19→ 10/17→ 10/17→	⬅ ➡	Brake Size: 16" / 17"		**11.8171-0008.1**	**990049**	ATE ATE
B4 Mild-Hybrid B5 Mild-Hybrid B6 Mild-Hybrid AWD	145 184 220	03/20→ 03/20→ 03/20→	⬅	Brake Size: 16" / 17"		**11.8171-0008.1**	**990049**	ATE
VOLVO - V40 Hatchback (525, 526) 03/12→								
Guide Bolt, brake caliper								
D2 D3 D4 T3 GTDi T4 GTDi	84 110 130 110 132	03/12→ 03/12→03/15 03/12→ 03/12→ 03/12→		09/12→	2	**11.8171-0008.1**	**990049**	ATE
D2 D3 D4 T2 T2 GTDi T3 T4 T4 AWD T5 T5 AWD 	88 110 140 90 88 90 - 112 132 - 147 132 - 140 157 - 187 157 - 187	02/15→08/18 04/15→ 05/14→ 02/15→ 03/13→12/15 02/15→ 07/13→ 07/13→ 12/12→ 01/13→			2	**11.8171-0008.1**	**990049**	ATE
T5	183	01/14→		05/14→	2	**11.8171-0008.1**	**990049**	ATE
Brake Pad Set, disc brake								
D2 D3 D4 T3 GTDi T4 GTDi	84 110 130 110 132	03/12→ 03/12→03/15 03/12→ 03/12→ 03/12→	⬅	09/12→; Rim Size [in]: 15 / 16		**13.0460-7193.2** **13.0470-7193.2**	**607193** **LD7193**	ATE 23723 18,1 - WE / - WK ATE 23723 18,1 - WE / - WK Ceramic
D2 D3 D4 D4 Polestar T2 T2 GTDi T3 T4 T5 T5 AWD T5 Drive-E Polestar T5 Polestar AWD	88 110 140 147 90 88 90 - 112 132 - 147 157 - 180 157 - 180 186 186	02/15→08/18 04/15→ 05/14→ 05/14→ 02/15→ 03/13→12/15 02/15→ 07/13→ 03/13→ 03/13→ 05/14→ 01/15→	⬅	Rim Size [in]: 15 / 16		**13.0460-7193.2** **13.0470-7193.2**	**607193** **LD7193**	ATE 23723 18,1 - WE / - WK ATE 23723 18,1 - WE / - WK Ceramic
T5	183	01/14→	⬅	05/14→; Rim Size [in]: 15 / 16		**13.0460-7193.2**	**607193**	ATE 23723 18,1 - WE / - WK

	kW				! #			
VOLVO - V40 Hatchback (525, 526) 03/12→								
Brake Pad Set, disc brake								
T5	183	01/14→		05/14→; Rim Size [in]: 15 / 16		**13.0470-7193.2**	**LD7193**	ATE 23723 18,1 - WE / - WK Ceramic
VOLVO - V40 Hatchback Van (525, 526) 09/13→12/15								
Guide Bolt, brake caliper								
1.6 D2/ DRIVe	84	09/13→12/15			2	**11.8171-0008.1**	**990049**	ATE
2.0 D3	110	09/13→12/15						
2.0 D4	130	09/13→12/14						
Brake Pad Set, disc brake								
1.6 D2/ DRIVe	84	09/13→12/15		Rim Size [in]: 15 / 16		**13.0460-7193.2**	**607193**	ATE 23723 18,1 - WE / - WK
2.0 D3	110	09/13→12/15				**13.0470-7193.2**	**LD7193**	ATE 23723 18,1 - WE / - WK Ceramic
2.0 D4	130	09/13→12/14						
VOLVO - V50 (545) 12/03→12/12								
Spring, brake caliper								
1.6	74	01/05→12/12		→ 05/12	2	**11.8116-0356.1**	**390586**	ATE
1.6 D	80	03/05→12/12						
1.6 D2	84	01/10→12/12						
2.0	107	10/06→12/12						
2.0 FlexFuel	107	01/10→12/12						
D3	110	10/10→12/12						
D4	130	10/10→12/12						
T5	169	03/07→12/12						
1.6 D	81	01/05→12/11			2	**11.8116-0356.1**	**390586**	ATE
1.8	92	04/04→12/10						
1.8 BiFuel	93	01/09→09/10						
1.8 FlexFuel	92	01/05→12/10						
2.0 CDI	98	12/03→12/06						
2.0 D	100	04/04→12/10						
2.0 D4	96	07/05→12/06						
2.4	103 - 125	04/04→12/10						
2.4 AWD	125	08/06→12/09						
2.4 D5	132	03/06→12/10						
2.4 Tdi	120	05/07→12/10						
T5	162	04/04→12/07						
T5 AWD	162 - 169	04/04→12/10						
Guide Bolt, brake caliper								
1.6	74	01/05→12/12		→ 05/12	2	**11.8171-0008.1**	**990049**	ATE
1.6 D	80	03/05→12/12						
1.6 D2	84	01/10→12/12		491292→; → 05/12	2	**11.8171-0008.1**	**990049**	ATE
2.0	107	10/06→12/12		→ 491291	2	**11.8171-0008.1**	**990049**	ATE
2.0 FlexFuel	107	01/10→12/12						
D3	110	10/10→12/12						
D4	130	10/10→12/12						
T5	169	03/07→12/12						
1.6 D	81	01/05→12/11			2	**11.8171-0008.1**	**990049**	ATE
1.8	92	04/04→12/10						
1.8 BiFuel	93	01/09→09/10		491292→	2	**11.8171-0008.1**	**990049**	ATE
1.8 FlexFuel	92	01/05→12/10		→ 491291	2	**11.8171-0008.1**	**990049**	ATE
2.0 CDI	98	12/03→12/06						
2.0 D	100	04/04→12/10						
2.0 D4	96	07/05→12/06						
2.4	103 - 125	04/04→12/10						
2.4 AWD	125	08/06→12/09						
2.4 D5	132	03/06→12/10						
2.4 Tdi	120	05/07→12/10						
T5	162	04/04→12/07						
T5 AWD	162 - 169	04/04→12/10						
Brake Pad Set, disc brake								
1.6	74	01/05→12/12		→ 05/12; not for rim size [in]: 17		**13.0460-7193.2**	**607193**	ATE 23723 18,1 - WE / - WK
1.6 D	80	03/05→12/12				**13.0470-7193.2**	**LD7193**	ATE 23723 18,1 - WE / - WK Ceramic
1.6 D2	84	01/10→12/12						
2.0	107	10/06→12/12						
2.0 FlexFuel	107	01/10→12/12						
D3	110	10/10→12/12						
D4	130	10/10→12/12						
T5	169	03/07→12/12						
1.6 D	81	01/05→12/11		not for rim size [in]: 17		**13.0460-7193.2**	**607193**	ATE 23723 18,1 - WE / - WK
1.8	92	04/04→12/10				**13.0470-7193.2**	**LD7193**	ATE 23723 18,1 - WE / - WK Ceramic
1.8 BiFuel	93	01/09→09/10						
1.8 FlexFuel	92	01/05→12/10						
2.0 CDI	98	12/03→12/06						
2.0 D	100	04/04→12/10						

© 2022 Continental Aftermarket & Services GmbH

	kW				! #			
VOLVO - V50 (545) 12/03→12/12								
Brake Pad Set, disc brake								
2.0 D4 2.4 2.4 AWD 2.4 D5 2.4 Tdi T5 T5 AWD	96 103 - 125 125 132 120 162 162 - 169	07/05→12/06 04/04→12/10 08/06→12/09 03/06→12/10 05/07→12/10 04/04→12/07 04/04→12/10		not for rim size [in]: 17		**13.0460-7193.2** **13.0470-7193.2**	**607193** **LD7193**	ATE 23723 18,1 - WE / - WK ATE 23723 18,1 - WE / - WK Ceramic
VOLVO - V60 I (155, 157) 07/10→12/18								
Guide Bolt, brake caliper								
1.5 T2	90	10/15→03/17		01/16→; for brake disc diameter [mm]: 300	2	**11.8171-0008.1**	**990049**	ATE
				01/16→; for brake disc diameter [mm]: 336	2	**11.8171-0008.1**	**990049**	ATE
1.6 DRIVe 2.4 D5 2.4 D5 AWD	84 158 158	02/11→12/15 04/11→12/15 04/11→12/15		06/11→; for brake disc diameter [mm]: 300	2	**11.8171-0008.1**	**990049**	ATE
				06/11→; for brake disc diameter [mm]: 336	2	**11.8171-0008.1**	**990049**	ATE
2.0 BiFuel 2.0 D2 2.0 D3 2.0 D4 2.0 T 2.0 T5 2.4 D5 Hybrid AWD D4 D4 AWD D4 Polestar AWD D5 D5 AWD D6 Hybrid AWD T3 T4F T5 T6 T6 AWD	157 88 110 140 132 162 120 133 133 - 140 147 - 162 165 - 169 169 162 112 132 176 - 180 224 - 225 225 - 242	03/14→12/15 03/15→05/18 03/15→05/18 03/15→05/18 01/14→07/18 01/14→12/17 03/15→05/18 10/13→12/15 10/13→05/18 03/15→05/18 04/14→05/18 04/14→12/15 03/15→05/18 03/15→05/18 04/11→12/15 08/12→12/18 10/13→12/18 10/13→12/18		for brake disc diameter [mm]: 300	2	**11.8171-0008.1**	**990049**	ATE
				for brake disc diameter [mm]: 336	2	**11.8171-0008.1**	**990049**	ATE
2.0 D4 Drive-E Polestar 2.0 T4	147 140	03/15→05/18 03/15→05/18		05/15→; for brake disc diameter [mm]: 300	2	**11.8171-0008.1**	**990049**	ATE
				05/15→; for brake disc diameter [mm]: 336	2	**11.8171-0008.1**	**990049**	ATE
2.0 T D3 / D4 D5 D5 AWD T3 T4 T5 T6 AWD	149 120 151 151 110 132 177 224	07/10→12/12 07/10→12/14 07/10→12/11 07/10→12/11 09/10→12/15 09/10→12/15 09/10→12/14 07/10→12/15		11/10→; for brake disc diameter [mm]: 300	2	**11.8171-0008.1**	**990049**	ATE
				11/10→; for brake disc diameter [mm]: 336	2	**11.8171-0008.1**	**990049**	ATE
2.4 Hybrid D6 AWD 2.4 Hybrid D6 Polestar AWD	158 169	06/12→12/15 06/12→12/15		11/12→; for brake disc diameter [mm]: 300	2	**11.8171-0008.1**	**990049**	ATE
				11/12→; for brake disc diameter [mm]: 336	2	**11.8171-0008.1**	**990049**	ATE
D3	100	05/12→12/15		10/12→; for brake disc diameter [mm]: 300	2	**11.8171-0008.1**	**990049**	ATE
				10/12→; for brake disc diameter [mm]: 336	2	**11.8171-0008.1**	**990049**	ATE
D4 AWD	120	05/12→12/15		12/12→; for brake disc diameter [mm]: 300	2	**11.8171-0008.1**	**990049**	ATE
				12/12→; for brake disc diameter [mm]: 336	2	**11.8171-0008.1**	**990049**	ATE
T5	157	10/13→05/18		04/14→; for brake disc diameter [mm]: 300	2	**11.8171-0008.1**	**990049**	ATE
				04/14→; for brake disc diameter [mm]: 336	2	**11.8171-0008.1**	**990049**	ATE
T5 AWD T5 Drive-E Polestar T5 Drive-E Polestar AWD	180 - 187 186 186	07/14→05/18 03/15→07/18 03/15→07/18				**11.8171-0008.1**	**990049**	ATE

	kW				! #			
VOLVO - V60 I Estate Van (155) 09/13→12/15								
Guide Bolt, brake caliper								
1.6 DRIVe	84	09/13→12/15	←	for brake disc diameter [mm]: 300	2	**11.8171-0008.1**	**990049**	ATE
2.0 D3	100	09/13→12/15	←	for brake disc diameter [mm]: 336	2	**11.8171-0008.1**	**990049**	ATE
2.0 D4	120	09/13→12/15						
2.4 D4 AWD	133	09/13→12/15						
2.4 D5	158	09/13→12/15						
VOLVO - V60 II (225, 227) 02/18→								
Guide Bolt, brake caliper								
2.0 T4	140	05/19→	←	Brake Size: 16" / 17"		**11.8171-0008.1**	**990049**	ATE
2.0 T6 Drive-E Polestar AWD	240	02/18→	→			**11.8171-0008.1**	**990049**	ATE
B3 Mild-Hybrid	120	03/20→						
B4 Mild-Hybrid	145	03/20→						
B4 Mild-Hybrid AWD	145	03/20→						
B5 Mild-Hybrid	184	03/20→						
B5 Mild-Hybrid AWD	184	03/20→						
B6 Mild-Hybrid AWD	220	03/20→						
D3	110	02/18→						
D3 AWD	110	09/18→						
D4	140	02/18→						
D4 AWD	140	09/18→						
D4 Polestar	147	02/18→						
D4 Polestar AWD	147	02/18→12/20						
T4 Polestar	155	07/19→						
T5	184	02/18→						
T5 AWD	184	03/19→						
T5 Polestar	186	07/19→						
T5 Polestar AWD	186	07/19→						
T6 AWD	228	02/18→						
T6 Plug-in Hybrid AWD	186	03/19→						
T8 Plug-in Hybrid AWD	223	02/18→						
T8 Plug-in Hybrid Polestar AWD	233	05/19→						
VOLVO - V70 I (875, 876) 12/95→12/00								
Guide Bolt, brake caliper								
2.0	93 - 132	12/95→03/00	←	01/97→	2	**11.8171-0008.1**	**990049**	ATE
2.0 Turbo	155	12/95→03/00						
2.3 Turbo	184	12/95→03/00						
2.4	106	12/95→03/00						
2.5 TDi AWD	103	11/96→02/00						
2.0	120	01/97→12/00	←	→ 03/00	2	**11.8171-0008.1**	**990049**	ATE
2.3 T-5 AWD	176	01/97→12/00						
2.4 Bifuel	103	08/99→12/00						
2.4 Turbo AWD	195	03/99→12/00						
2.0 Turbo	166	11/96→12/00	←	01/97→ 03/00	2	**11.8171-0008.1**	**990049**	ATE
2.0 Turbo AWD	166	11/96→12/00						
2.3	177	11/96→11/00						
2.3 T-5	176	11/96→12/00						
2.4	125	12/95→05/00						
2.4 Turbo	142	04/96→12/00						
2.4 Turbo AWD	142	04/96→12/00						
2.5 TDI	103	12/95→12/00						
2.3 AWD	177	04/97→09/98	←		2	**11.8171-0008.1**	**990049**	ATE
2.3 T AWD	184	04/97→03/00						
2.4	121	06/98→12/99						
2.4	103	03/99→12/00	←	08/99→ 03/00	2	**11.8171-0008.1**	**990049**	ATE
2.4 AWD	121	06/98→12/99	←	10/98→ 05/99	2	**11.8171-0008.1**	**990049**	ATE
2.4 Bifuel	106	05/98→12/99	←	10/98→ 08/99	2	**11.8171-0008.1**	**990049**	ATE
VOLVO - V70 II (285) 11/99→12/08								
Guide Bolt, brake caliper								
2.0 T	132	11/99→08/07		01/03→ 07/07	2	**11.8171-0008.1**	**990049**	ATE
				07/01→ 12/02	2	**11.8171-0008.1**	**990049**	ATE
				07/01→ 07/07	2	**11.8171-0008.1**	**990049**	ATE
2.3	195	10/00→09/04		→ 12/02	2	**11.8171-0008.1**	**990049**	ATE
2.5 AWD	155	09/02→12/04		01/03→	2	**11.8171-0008.1**	**990049**	ATE
					2	**11.8171-0008.1**	**990049**	ATE
2.3 T5	184	11/99→12/04		03/00→ 12/02	2	**11.8171-0008.1**	**990049**	ATE
2.4 T	147	11/99→08/03		03/00→	2	**11.8171-0008.1**	**990049**	ATE
				01/03→	2	**11.8171-0008.1**	**990049**	ATE
2.4	103 - 125	03/00→08/07		01/03→ 07/07	2	**11.8171-0008.1**	**990049**	ATE
2.4 Bifuel	103	09/01→08/07		→ 12/02	2	**11.8171-0008.1**	**990049**	ATE
				→ 07/07	2	**11.8171-0008.1**	**990049**	ATE

© 2022 Continental Aftermarket & Services GmbH

	kW				! #			
VOLVO - V70 II (285) 11/99→12/08								
Guide Bolt, brake caliper								
2.4 CDI 2.4 T AWD	90 147	07/05→12/08 09/01→08/02			2	**11.8171-0008.1**	**990049**	ATE
2.4 D	93	04/05→12/08		05/05→ 07/07	2	**11.8171-0008.1**	**990049**	ATE
2.4 D	96	07/01→08/07		01/03→ 07/07	2	**11.8171-0008.1**	**990049**	ATE
				12/01→ 07/07	2	**11.8171-0008.1**	**990049**	ATE
				12/01→ 12/02	2	**11.8171-0008.1**	**990049**	ATE
2.4 D5	120	01/01→12/08		01/03→ 07/07	2	**11.8171-0008.1**	**990049**	ATE
				08/01→ 12/02	2	**11.8171-0008.1**	**990049**	ATE
				08/01→ 07/07	2	**11.8171-0008.1**	**990049**	ATE
2.4 D5 2.4 D5 AWD	136 136	04/05→12/08 05/05→08/07		12/05→ 07/07	2	**11.8171-0008.1**	**990049**	ATE
2.4 D5 AWD	120	07/02→08/07		03/03→ 07/07	2	**11.8171-0008.1**	**990049**	ATE
2.4 T5	191	04/04→08/07		→ 07/07	2	**11.8171-0008.1**	**990049**	ATE
2.5 T	154	07/01→08/07		04/04→ 07/07	2	**11.8171-0008.1**	**990049**	ATE
2.5 T AWD	154	07/02→08/07		01/03→ 07/07	2	**11.8171-0008.1**	**990049**	ATE
				09/02→ 07/07	2	**11.8171-0008.1**	**990049**	ATE
				09/02→ 12/02	2	**11.8171-0008.1**	**990049**	ATE
2.5 TDI	103	11/99→08/07		03/00→ 12/02	2	**11.8171-0008.1**	**990049**	ATE
				01/03→ 07/07	2	**11.8171-0008.1**	**990049**	ATE
VOLVO - V70 III (135) 04/07→04/16								
Guide Bolt, brake caliper								
1.6 D 2.0 T	80 149	07/09→12/11 09/09→12/11	←	01/10→; for brake disc diameter [mm]: 300	2	**11.8171-0008.1**	**990049**	ATE
			←	01/10→; for brake disc diameter [mm]: 316	2	**11.8171-0008.1**	**990049**	ATE
			←	01/10→; for brake disc diameter [mm]: 336	2	**11.8171-0008.1**	**990049**	ATE
1.6 DRIVe / D2 1.6 T4F 2.0 2.0 BiFuel 2.0 D 2.0 FlexiFuel 2.5 T 2.5 T FlexiFuel 3.0 T6 AWD 3.2 3.2 AWD D2 D3 D3 / D4 D4 D4 AWD D5 D5 AWD T4 T5 T6 AWD	84 132 107 157 100 107 147 147 242 175 - 179 179 88 100 - 110 120 133 120 - 133 158 - 169 151 - 169 132 - 140 177 - 180 210 - 224	04/11→12/15 01/11→12/15 10/07→12/11 03/13→12/15 10/07→12/15 01/08→12/11 08/07→12/09 05/08→12/09 11/13→04/16 08/07→12/14 04/10→12/15 03/15→04/16 10/07→04/16 03/10→12/15 10/13→04/16 10/07→04/16 03/11→04/16 12/09→04/16 10/10→04/16 01/10→04/16 08/07→12/15	←	for brake disc diameter [mm]: 300	2	**11.8171-0008.1**	**990049**	ATE
			←	for brake disc diameter [mm]: 316	2	**11.8171-0008.1**	**990049**	ATE
			←	for brake disc diameter [mm]: 336	2	**11.8171-0008.1**	**990049**	ATE
2.0 GDI	157	04/12→12/15	←	03/13→; for brake disc diameter [mm]: 336	2	**11.8171-0008.1**	**990049**	ATE
			←	03/13→; for brake disc diameter [mm]: 300	2	**11.8171-0008.1**	**990049**	ATE
			←	03/13→; for brake disc diameter [mm]: 316	2	**11.8171-0008.1**	**990049**	ATE
2.4 D 3.2 AWD D5	120 175 136	04/07→12/10 04/07→12/10 04/07→12/09	←	08/07→; for brake disc diameter [mm]: 300	2	**11.8171-0008.1**	**990049**	ATE
			←	08/07→; for brake disc diameter [mm]: 316	2	**11.8171-0008.1**	**990049**	ATE
			←	08/07→; for brake disc diameter [mm]: 336	2	**11.8171-0008.1**	**990049**	ATE
2.4 D 2.5 T 2.5 T FlexiFuel	129 170 170	04/09→12/10 04/09→12/12 04/09→12/11	←	10/09→; for brake disc diameter [mm]: 300	2	**11.8171-0008.1**	**990049**	ATE
			←	10/09→; for brake disc diameter [mm]: 316	2	**11.8171-0008.1**	**990049**	ATE
			←	10/09→; for brake disc diameter [mm]: 336	2	**11.8171-0008.1**	**990049**	ATE

	kW				! #			
VOLVO - V70 III (135) 04/07→04/16								
Guide Bolt, brake caliper								
D5	151	10/08→12/11	←	12/09→; for brake disc diameter [mm]: 300	2	**11.8171-0008.1**	**990049**	ATE
			←	12/09→; for brake disc diameter [mm]: 316	2	**11.8171-0008.1**	**990049**	ATE
			←	12/09→; for brake disc diameter [mm]: 336	2	**11.8171-0008.1**	**990049**	ATE
D5 AWD	136	04/07→12/09	←	10/07→; for brake disc diameter [mm]: 316	2	**11.8171-0008.1**	**990049**	ATE
			←	10/07→; for brake disc diameter [mm]: 336	2	**11.8171-0008.1**	**990049**	ATE
			←	10/07→; for brake disc diameter [mm]: 300	2	**11.8171-0008.1**	**990049**	ATE
D5 AWD	158	04/11→12/15	←	06/11→; for brake disc diameter [mm]: 300	2	**11.8171-0008.1**	**990049**	ATE
			←	06/11→; for brake disc diameter [mm]: 316	2	**11.8171-0008.1**	**990049**	ATE
			←	06/11→; for brake disc diameter [mm]: 336	2	**11.8171-0008.1**	**990049**	ATE
VOLVO - V70 III Estate Van (135) 09/13→								
Guide Bolt, brake caliper								
2.0 D3 DRIVe 2.4 D4 AWD 2.4 D5	100 120 158	09/13→ 09/13→ 09/13→	←	for brake disc diameter [mm]: 300	2	**11.8171-0008.1**	**990049**	ATE
			←	for brake disc diameter [mm]: 316	2	**11.8171-0008.1**	**990049**	ATE
			←	for brake disc diameter [mm]: 336	2	**11.8171-0008.1**	**990049**	ATE
VOLVO - V90 II Estate (235, 236) 03/16→								
Guide Bolt, brake caliper								
B4 Mild-Hybrid B5 Mild-Hybrid B5 Mild-Hybrid AWD B6 Mild-Hybrid AWD D3 D3 AWD D4 D4 AWD D4 Polestar D5 AWD D5 Mild Hybrid AWD Polestar AWD T4 T4 Polestar T5 T5 Polestar T6 AWD T6 Polestar AWD T8 Hybrid AWD T8 Plug-in-Hybrid AWD T8 Plug-in Hybrid Pole- star AWD	145 184 - 196 184 220 - 256 110 110 120 - 140 120 - 140 147 173 173 147 - 176 140 155 184 - 187 186 228 - 235 240 - 246 223 235 233 - 246	03/20→ 03/20→ 03/20→ 03/20→ 03/16→08/18 03/16→ 03/16→ 03/16→ 10/16→ 03/16→ 12/20→ 10/16→ 10/17→ 06/19→ 03/16→ 06/19→ 03/16→ 10/16→ 04/18→ 03/16→12/18 03/16→	←	Brake Size: 16" / 17"		**11.8171-0008.1**	**990049**	ATE
			→			**11.8171-0008.1**	**990049**	ATE
T5 AWD	183 - 187	03/16→	←	Brake Size: 17"		**11.8171-0008.1**	**990049**	ATE
T5 Polestar AWD T6 Plug-in-Hybrid AWD T8 Plug-in-Hybrid AWD	186 250 287	10/17→ 06/20→ 06/20→	→			**11.8171-0008.1**	**990049**	ATE
VOLVO - XC40 (536) 10/17→								
Guide Bolt, brake caliper								
Recharge AWD	160 - 300	11/20→	→		2	**11.8171-0008.1**	**990049**	ATE
VOLVO - XC60 II (246) 03/17→								
Guide Bolt, brake caliper								
B4 Mild-Hybrid B4 Mild-Hybrid AWD B5 Mild-Hybrid B5 Mild-Hybrid AWD B6 Mild-Hybrid AWD D3	145 145 184 173 - 184 220 110	09/19→ 04/19→ 01/20→ 04/19→ 03/20→ 03/17→	←	Brake Size: 17"		**11.8171-0008.1**	**990049**	ATE
			→			**11.8171-0008.1**	**990049**	ATE

© 2022 Continental Aftermarket & Services GmbH

	kW				! #			
VOLVO - XC60 II (246) 03/17→								
Guide Bolt, brake caliper								
D4	120 - 140	03/17→	←	Brake Size: 17"		**11.8171-0008.1**	**990049**	ATE
D4 AWD D4 Polestar D4 Polestar AWD D5 AWD D5 Polestar AWD T4 T4 Polestar T5 T5 AWD T5 Polestar T5 Polestar AWD T6 AWD T6 Polestar AWD T8 Hybrid AWD T8 Hybrid Polestar AWD	140 147 147 173 177 140 155 184 - 187 183 - 187 186 186 - 192 228 - 235 240 - 246 223 - 246 233	03/17→ 05/20→ 01/19→ 03/17→ 10/18→ 09/18→ 07/19→ 03/17→ 03/17→ 05/19→ 03/17→ 03/17→ 03/17→ 03/17→ 01/19→	→			**11.8171-0008.1**	**990049**	ATE
B4 Plug-In Hybrid T8 Hybrid Polestar AWD	186 246	01/21→ 05/21→	←	Brake Size: 17"		**11.8171-0008.1**	**990049**	ATE
VOLVO - XC70 II (136) 04/07→12/16								
Guide Bolt, brake caliper								
2.4 D	129	06/09→12/10		01/10→	2	**11.8171-0008.1**	**990049**	ATE
			←	01/10→	2	**11.8171-0008.1**	**990049**	ATE
2.4 D / D4 AWD	120	08/07→04/16			2	**11.8171-0008.1**	**990049**	ATE
3.2 AWD D3 D4 D4 AWD D5 AWD T5 T5 AWD T6 AWD T6 Polestar AWD	175 - 179 120 133 133 158 - 169 180 187 183 - 224 242	08/07→12/14 04/10→12/15 10/13→04/16 10/13→04/16 04/11→04/16 10/13→12/16 08/15→12/16 01/08→12/16 11/13→12/16	←		2	**11.8171-0008.1**	**990049**	ATE
D5 AWD	136	04/07→12/09		08/07→	2	**11.8171-0008.1**	**990049**	ATE
			←	08/07→	2	**11.8171-0008.1**	**990049**	ATE
D5 AWD	151	04/09→12/11		12/09→	2	**11.8171-0008.1**	**990049**	ATE
			←	12/09→	2	**11.8171-0008.1**	**990049**	ATE
VOLVO - XC70 II VAN (136) 04/07→12/16								
Guide Bolt, brake caliper								
2.0 D4	120	09/13→12/16	←		2	**11.8171-0008.1**	**990049**	ATE
			→		2	**11.8171-0008.1**	**990049**	ATE
2.4 D4 AWD 2.4 D5 AWD	120 158	09/13→04/16 09/13→12/16	←		2	**11.8171-0008.1**	**990049**	ATE
VOLVO - XC70 CROSS COUNTRY I (295) 10/97→10/07								
Guide Bolt, brake caliper								
2.4 D5 AWD 2.4 D5 XC AWD 2.5 T XC AWD	136 120 154	12/05→08/07 09/02→08/07 09/02→08/07		→ 07/07	2	**11.8171-0008.1**	**990049**	ATE
2.4 T XC AWD	142 - 147	11/97→09/02			2	**11.8171-0008.1**	**990049**	ATE
VOLVO - XC90 I (275) 06/02→01/15								
Guide Bolt, brake caliper								
2.5 2.5 AWD 2.5 T AWD 3.2 3.2 AWD D3 / D5 D5 AWD T6 AWD V8 AWD	153 153 154 175 - 179 179 120 120 - 155 200 232 - 235	01/03→12/06 06/02→12/14 10/02→09/14 09/11→09/14 04/10→09/14 04/09→12/14 10/02→12/14 10/02→12/06 09/04→12/10	→		2	**11.8171-0008.1**	**990049**	ATE

	kW				! #			
VOLVO - XC90 I (275) 06/02→01/15								
Guide Bolt, brake caliper								
3.2 AWD D5 AWD	175 136	03/06→12/10 04/05→12/10	➡	05/06→	2	**11.8171-0008.1**	**990049**	ATE
VOLVO - XC90 I VAN (275) 06/02→01/15								
Guide Bolt, brake caliper								
2.4 D4 2.4 D5 AWD	120 147	09/13→12/14 09/13→12/14	➡		2	**11.8171-0008.1**	**990049**	ATE
VOLVO - XC90 II (256) 09/14→								
Guide Bolt, brake caliper								
2.0 B5 Mild-Hybrid AWD 2.0 D5 Polestar AWD 2.0 T5 AWD 2.0 T6 AWD 2.0 T8 Hybrid AWD 2.0 T8 Hybrid Polestar AWD B5 Mild-Hybrid AWD B6 Mild-Hybrid AWD D4 D4 AWD D5 AWD D5 DRIVe Polestar AWD T5 AWD T5 Drive-E Polestar AWD T5 Polestar AWD T6 AWD T6 Polestar AWD T8 Hybrid AWD T8 Plug-in Hybrid Polestar AWD T8 Twin Engine AWD	184 177 183 - 184 228 223 233 173 220 140 140 165 - 173 176 187 176 - 192 186 235 240 - 246 235 - 298 246 287	01/20→ 10/18→ 02/16→ 10/17→ 04/18→ 01/19→ 04/19→ 03/20→ 06/15→12/18 10/15→12/18 09/14→12/19 03/16→ 06/15→12/18 10/17→ 07/19→ 09/14→12/18 01/17→ 06/15→ 06/15→ 06/19→	➡			**11.8171-0008.1**	**990049**	ATE
VW - AMAROK (2HA, 2HB, S1B, S6B, S7A, S7B) 09/10→								
Brake Pad Set, disc brake								
2.0 BiTDI	120 - 132	09/10→	⬅	+PR 2E4		**13.0470-3877.2**	**LD3877**	BOS + WE / - WK + Zub Ceramic
2.0 BiTDI 4motion 2.0 TDI 2.0 TDI 4motion 2.0 TSI 3.0 TDI 3.0 TDI 4motion	120 - 132 90 - 103 90 - 103 118 120 150 - 190	09/10→ 09/10→ 09/10→ 12/10→10/16 06/16→ 06/16→	➡	+PR 2E4		**13.0460-3880.2** **13.0470-3880.2**	**603880** **LD3880**	+ WE / - WK + Zub + WE / - WK + Zub Ceramic
3.0 TDI 4motion	120 - 165	06/16→	⬅	09/16→; +PR 2E4		**13.0470-3877.2**	**LD3877**	BOS + WE / - WK + Zub Ceramic
			➡	09/16→; +PR 2E4		**13.0460-3880.2** **13.0470-3880.2**	**603880** **LD3880**	+ WE / - WK + Zub + WE / - WK + Zub Ceramic
VW - AMAROK Platform/Chassis (S1B, S6B, S7B) 09/11→								
Brake Pad Set, disc brake								
2.0 BiTDI	132	09/11→07/19	⬅	11/11→; +PR 2E4		**13.0470-3877.2**	**LD3877**	BOS + WE / - WK + Zub Ceramic
			➡	11/11→; +PR 2E4		**13.0460-3880.2** **13.0470-3880.2**	**603880** **LD3880**	+ WE / - WK + Zub + WE / - WK + Zub Ceramic
2.0 BiTDI 4motion	132	09/11→07/19	⬅	+PR 2E4		**13.0470-3877.2**	**LD3877**	BOS + WE / - WK + Zub Ceramic
			➡	11/11→; +PR 2E4		**13.0460-3880.2** **13.0470-3880.2**	**603880** **LD3880**	+ WE / - WK + Zub + WE / - WK + Zub Ceramic
2.0 TDI	90 - 103	09/11→10/16	⬅	07/12→; +PR 2E4		**13.0470-3877.2**	**LD3877**	BOS + WE / - WK + Zub Ceramic
			➡	07/12→; +PR 2E4		**13.0460-3880.2** **13.0470-3880.2**	**603880** **LD3880**	+ WE / - WK + Zub + WE / - WK + Zub Ceramic
2.0 TDI 4motion	103	09/11→10/16	⬅	06/12→; +PR 2E4		**13.0470-3877.2**	**LD3877**	BOS + WE / - WK + Zub Ceramic
			➡	06/12→; +PR 2E4		**13.0460-3880.2** **13.0470-3880.2**	**603880** **LD3880**	+ WE / - WK + Zub + WE / - WK + Zub Ceramic
3.0 TDI 4motion	150 - 190	06/16→	⬅	+PR 2E4		**13.0470-3877.2**	**LD3877**	BOS + WE / - WK + Zub Ceramic
			➡	+PR 2E4		**13.0460-3880.2** **13.0470-3880.2**	**603880** **LD3880**	+ WE / - WK + Zub + WE / - WK + Zub Ceramic

© 2022 Continental Aftermarket & Services GmbH

VW - ARTEON (3H7, 3H8) 03/17→

	kW				! #			
Brake Caliper								
1.5 TSI 2.0 TDI 2.0 TDI 4motion 2.0 TSI 2.0 TSI 4motion	110 110 - 147 140 - 176 140 200 - 206	11/17→07/19 03/17→ 03/17→ 05/17→ 04/17→	←	+PR 1ZA / 1ZD / 1ZK / 1ZL;		**24.3571-1801.5**	**241387**	without holder
			←	+PR 1ZA / 1ZD / 1ZK / 1ZL;		**24.3571-1802.5**	**241388**	without holder
			←	+PR 1LA / 1LB;		**24.3601-1727.5**	**240786**	TRW without holder
			←	+PR 1LA / 1LB;		**24.3601-1728.5**	**240787**	TRW without holder
			→	+PR 1KZ;		**24.6242-7001.5**	**241335**	ATE + EMot / without holder + eFSB
			→	+PR 1KZ;		**24.6242-7002.5**	**241336**	ATE + EMot / without holder + eFSB
			→	+PR 1KU;		**24.6242-7005.5**	**241337**	ATE + EMot / without holder + eFSB
			→	+PR 1KU;		**24.6242-7006.5**	**241338**	ATE + EMot / without holder + eFSB
Brake Pad Set, disc brake								
1.5 TSI 2.0 TDI 2.0 TDI 4motion 2.0 TSI 2.0 TSI 4motion	110 110 - 147 140 - 176 140 206	11/17→07/19 03/17→ 03/17→ 05/17→ 04/17→06/20	←	+PR 1LA		**13.0460-2617.2** **13.0470-2617.2**	**602617** **LD2617**	TRW + WK TRW + WK Ceramic
			←	+PR 1ZA / 1ZD / 1ZK / 1ZL		**13.0460-2785.2** **13.0470-2785.2**	**602785** **LD2785**	TRW 25683 20,4 + WE / + WK TRW 25683 20,4 + WE / + WK Ceramic
			←	+PR 1ZL		**13.0470-2609.2**	**LD2609**	TRW + WE / - WK Ceramic
			→	+PR 1KF / 1KU / 1KZ / 2EM / 2ER		**13.0460-7294.2** **13.0470-7294.2**	**607294** **LD7294**	ATE 25009 16,4 - WE / - WK ATE 25009 16,4 - WE / - WK Ceramic
2.0 eHybrid	115	11/20→	→	+PR 1KF / 1KU / 1KZ / 2EM / 2ER		**13.0460-7294.2** **13.0470-7294.2**	**607294** **LD7294**	ATE 25009 16,4 - WE / - WK ATE 25009 16,4 - WE / - WK Ceramic
2.0 TSI 4motion	200	04/18→	←	+PR 1LA		**13.0460-2617.2** **13.0470-2617.2**	**602617** **LD2617**	TRW + WK TRW + WK Ceramic
			←	+PR 1ZA / 1ZD / 1ZK / 1ZL		**13.0460-2785.2** **13.0470-2785.2**	**602785** **LD2785**	TRW 25683 20,4 + WE / + WK TRW 25683 20,4 + WE / + WK Ceramic
			←	+PR 1ZL; 08/20→		**13.0470-2609.2**	**LD2609**	TRW + WE / - WK Ceramic
			→	+PR 1KF / 1KU / 1KZ / 2EM / 2ER		**13.0460-7294.2** **13.0470-7294.2**	**607294** **LD7294**	ATE 25009 16,4 - WE / - WK ATE 25009 16,4 - WE / - WK Ceramic
TSI R	235	11/20→	→	+PR 1KF / 1KU / 1KZ / 2EM / 2ER		**13.0460-7294.2**	**607294**	ATE 25009 16,4 - WE / - WK
Warning Contact, brake pad wear								
1.5 TSI 2.0 TDI 2.0 TDI 4motion 2.0 TSI 2.0 TSI 4motion	110 110 - 147 140 - 176 140 200 - 206	11/17→07/19 03/17→ 03/17→ 05/17→ 04/17→	←	+PR 1ZA / 1ZD / 1ZK / 1ZL	1	**24.8190-0065.2**	**620065**	
Brake Disc								
1.5 TSI 2.0 TDI 2.0 TDI 4motion 2.0 TSI 2.0 TSI 4motion	110 110 - 147 140 - 176 140 200 - 206	11/17→07/19 03/17→ 03/17→ 05/17→ 04/17→	←	+PR 1ZA / 1ZD / 1ZK / 1ZL		**24.0125-0158.1**	**425158**	Ø 312 Brake Disc Thickness [mm] 25 Minimum thickness [mm] 22 Vented + S
			←	+PR 1LA / 1LB		**24.0130-0225.1**	**430225**	Ø 340 Brake Disc Thickness [mm] 30 Minimum thickness [mm] 27 Vented + S
			→	+PR 1KU / 2EM		**24.0112-0210.1**	**412210**	Ø 300 Brake Disc Thickness [mm] 12 Minimum thickness [mm] 10 + S
			→	+PR 1KF / 1KZ / 2ER		**24.0122-0219.1**	**422219**	Ø 310 Brake Disc Thickness [mm] 22 Minimum thickness [mm] 20 Vented
Sensor, wheel speed								
1.5 TSI 2.0 TDI	110 110 - 140	11/17→07/19 03/17→06/20	←			**24.0711-5273.3**	**360303**	
			←			**24.0711-5274.3**	**360304**	
			→		2	**24.0711-6337.3**	**360390**	

	kW				! #			
VW - ARTEON (3H7, 3H8) 03/17→								
Sensor, wheel speed								
2.0 TDI	147	09/20→	←			24.0711-5273.3	360303	
			←			24.0711-5274.3	360304	
2.0 TDI 4motion 2.0 TSI 4motion	140 - 176 200 - 206	03/17→07/20 04/17→	←			24.0711-5273.3	360303	
			←			24.0711-5274.3	360304	
			→	→ 11/19;		24.0711-5401.3	360330	
			→	12/19→;		24.0711-5401.3	360330	
			→	12/19→;		24.0711-5402.3	360331	
			→	→ 11/19;		24.0711-5402.3	360331	
2.0 TDI 4motion	147	09/20→	←			24.0711-5273.3	360303	
			←			24.0711-5274.3	360304	
			→			24.0711-5401.3	360330	
			→			24.0711-5402.3	360331	
2.0 TSI	140	05/17→	←			24.0711-5273.3	360303	
			←			24.0711-5274.3	360304	
			→	→ 07/20	2	24.0711-6337.3	360390	
Control Element, parking brake caliper								
1.5 TSI 2.0 TDI 2.0 TDI 4motion 2.0 TSI 2.0 TSI 4motion	110 110 - 147 140 - 176 140 200 - 206	11/17→07/19 03/17→ 03/17→ 05/17→ 04/17→	→			11.9282-1001.3	250159	ATE
			→			11.9282-1002.3	250160	ATE
VW - ARTEON SHOOTING BRAKE (3H9) 06/20→								
Brake Caliper								
1.5 TSi 2.0 TDI 2.0 TDI 4motion 2.0 TSi 2.0 TSi 4motion 2.0 TSI 4motion	110 110 - 147 140 - 147 140 140 - 200 206	08/20→ 09/20→ 09/20→ 09/20→ 06/20→ 06/20→	←	+PR 1ZA / 1ZD / 1ZK / 1ZL;		24.3571-1801.5	241387	without holder
			←	+PR 1ZA / 1ZD / 1ZK / 1ZL;		24.3571-1802.5	241388	without holder
			←	+PR 1LA / 1LB;		24.3601-1727.5	240786	TRW without holder
			←	+PR 1LA / 1LB;		24.3601-1728.5	240787	TRW without holder
			→	+PR 1KZ;		24.6242-7001.5	241335	ATE + EMot / without holder + eFSB
			→	+PR 1KZ;		24.6242-7002.5	241336	ATE + EMot / without holder + eFSB
			→	+PR 1KU;		24.6242-7005.5	241337	ATE + EMot / without holder + eFSB
			→	+PR 1KU;		24.6242-7006.5	241338	ATE + EMot / without holder + eFSB
Brake Pad Set, disc brake								
1.4 eHybrid	115	11/20→	→	+PR 1KF / 1KU / 1KZ / 2EM / 2ER		13.0460-7294.2 13.0470-7294.2	607294 LD7294	ATE 25009 16,4 - WE / - WK ATE 25009 16,4 - WE / - WK Ceramic
1.5 TSi 2.0 TDI 2.0 TDI 4motion 2.0 TSi 2.0 TSi 4motion	110 110 - 147 140 - 147 140 140 - 200	08/20→ 09/20→ 09/20→ 09/20→ 06/20→	←	+PR 1LA		13.0460-2617.2 13.0470-2617.2	602617 LD2617	TRW + WK TRW + WK Ceramic
			←	+PR 1ZA / 1ZD / 1ZK / 1ZL		13.0460-2785.2 13.0470-2785.2	602785 LD2785	TRW 25683 20,4 + WE / + WK TRW 25683 20,4 + WE / + WK Ceramic
			←	+PR 1ZL		13.0470-2609.2	LD2609	TRW + WE / - WK Ceramic
			→	+PR 1KF / 1KU / 1KZ / 2EM / 2ER		13.0460-7294.2 13.0470-7294.2	607294 LD7294	ATE 25009 16,4 - WE / - WK ATE 25009 16,4 - WE / - WK Ceramic
2.0 TSI 4motion	206	06/20→	←	+PR 1LA		13.0460-2617.2 13.0470-2617.2	602617 LD2617	TRW + WK TRW + WK Ceramic
			←	+PR 1ZA / 1ZD / 1ZK / 1ZL		13.0460-2785.2 13.0470-2785.2	602785 LD2785	TRW 25683 20,4 + WE / + WK TRW 25683 20,4 + WE / + WK Ceramic
			←	+PR 1ZL; 08/20→		13.0470-2609.2	LD2609	TRW + WE / - WK Ceramic
			→	+PR 1KF / 1KU / 1KZ / 2EM / 2ER		13.0460-7294.2 13.0470-7294.2	607294 LD7294	ATE 25009 16,4 - WE / - WK ATE 25009 16,4 - WE / - WK Ceramic

© 2022 Continental Aftermarket & Services GmbH

	kW				! #			
VW - ARTEON SHOOTING BRAKE (3H9) 06/20→								
Brake Pad Set, disc brake								
2.0 TSI R	235	11/20→	➡	+PR 1KF / 1KU / 1KZ / 2EM / 2ER		**13.0460-7294.2**	**607294**	ATE 25009 16,4 - WE / - WK
Warning Contact, brake pad wear								
1.5 TSi 2.0 TDI 2.0 TDI 4motion 2.0 TSi 2.0 TSi 4motion 2.0 TSI 4motion	110 110 - 147 140 - 147 140 140 - 200 206	08/20→ 09/20→ 09/20→ 09/20→ 06/20→ 06/20→	⬅	+PR 1ZA / 1ZD / 1ZK / 1ZL	1	**24.8190-0065.2**	**620065**	
Brake Disc								
1.5 TSi 2.0 TDI 2.0 TDI 4motion 2.0 TSi 2.0 TSi 4motion 2.0 TSI 4motion	110 110 - 147 140 - 147 140 140 - 200 206	08/20→ 09/20→ 09/20→ 09/20→ 06/20→ 06/20→	⬅	+PR 1ZA / 1ZD / 1ZK / 1ZL		**24.0125-0158.1**	**425158**	Ø 312 Brake Disc Thickness [mm] 25 Minimum thickness [mm] 22 Vented + S
			⬅	+PR 1LA / 1LB		**24.0130-0225.1**	**430225**	Ø 340 Brake Disc Thickness [mm] 30 Minimum thickness [mm] 27 Vented + S
			➡	+PR 1KU / 2EM		**24.0112-0210.1**	**412210**	Ø 300 Brake Disc Thickness [mm] 12 Minimum thickness [mm] 10 + S
			➡	+PR 1KF / 1KZ / 2ER		**24.0122-0219.1**	**422219**	Ø 310 Brake Disc Thickness [mm] 22 Minimum thickness [mm] 20 Vented
Sensor, wheel speed								
1.5 TSi 2.0 TDI 2.0 TSi 2.0 TSi 4motion	110 110 - 147 140 140	08/20→ 09/20→ 09/20→ 06/20→	⬅			**24.0711-5273.3**	**360303**	
			⬅			**24.0711-5274.3**	**360304**	
2.0 TDI 4motion 2.0 TSi 4motion 2.0 TSI 4motion	140 - 147 200 206	09/20→ 09/20→ 06/20→	⬅			**24.0711-5273.3**	**360303**	
			⬅			**24.0711-5274.3**	**360304**	
			➡			**24.0711-5401.3**	**360330**	
			➡			**24.0711-5402.3**	**360331**	
Control Element, parking brake caliper								
1.5 TSi 2.0 TDI 2.0 TDI 4motion 2.0 TSi 2.0 TSi 4motion 2.0 TSI 4motion	110 110 - 147 140 - 147 140 140 - 200 206	08/20→ 09/20→ 09/20→ 09/20→ 06/20→ 06/20→	➡			**11.9282-1001.3**	**250159**	ATE
			➡			**11.9282-1002.3**	**250160**	ATE
VW - BEETLE (5C1, 5C2) 04/11→07/19								
Guide Bolt, brake caliper								
1.2 TSI 1.2 TSI 16V 1.4 TSI 1.6 TDI 2.0 TDI 2.0 TFSI 2.0 TSI 2.5	77 77 110 - 118 77 103 147 130 - 162 125	07/11→07/19 12/14→07/19 10/11→07/19 10/11→07/16 04/11→07/16 04/11→07/16 12/14→07/19 04/11→07/19		+PR 1ZA / 1ZE / 1ZP	2	**11.8171-0008.1**	**990049**	ATE
				+PR 1LV / 1ZB / 1ZD	2	**11.8171-0008.1**	**990049**	ATE
2.0 TDI	81	06/14→09/18		12/14→; +PR 1ZA / 1ZE / 1ZP	2	**11.8171-0008.1**	**990049**	ATE
				12/14→; +PR 1LV / 1ZB / 1ZD	2	**11.8171-0008.1**	**990049**	ATE
2.0 TDI	110	07/14→09/18		09/14→; +PR 1ZA / 1ZE / 1ZP	2	**11.8171-0008.1**	**990049**	ATE
				09/14→; +PR 1LV / 1ZB / 1ZD	2	**11.8171-0008.1**	**990049**	ATE
2.0 TSI	155	12/12→07/19		05/13→; +PR 1ZA / 1ZE / 1ZP	2	**11.8171-0008.1**	**990049**	ATE
				05/13→; +PR 1LV / 1ZB / 1ZD	2	**11.8171-0008.1**	**990049**	ATE

	kW				! #			
VW - BEETLE (5C1, 5C2) 04/11→07/19								
Brake Disc								
1.2 TSI 1.2 TSI 16V 1.4 TSI	77 77 110 - 118	07/11→07/19 12/14→07/19 10/11→07/19	←	+PR 1ZE / 1ZP		**24.0125-0145.1**	**425145**	Ø 288 Brake Disc Thickness [mm] 25 Minimum thickness [mm] 22 Vented + S
1.6 TDI 2.0 TDI 2.0 TFSI 2.0 TSI	77 103 147 130 - 162	10/11→07/16 04/11→07/16 04/11→07/16 12/14→07/19	←	+PR 1ZA / 1ZB / 1ZD / 1LV		**24.0125-0158.1** **24.0325-0158.1**	**425158** **525158**	Ø 312 Brake Disc Thickness [mm] 25 Minimum thickness [mm] 22 Vented + S Ø 312 Brake Disc Thickness [mm] 25 Minimum thickness [mm] 22 Vented + S
			→	+PR 1KS / 1KT		**24.0110-0356.1**	**410356**	Ø 272 Brake Disc Thickness [mm] 9.7 Minimum thickness [mm] 8 + S
2.0 TDI	81	06/14→09/18	←	12/14→; +PR 1ZE / 1ZP		**24.0125-0145.1**	**425145**	Ø 288 Brake Disc Thickness [mm] 25 Minimum thickness [mm] 22 Vented + S
			←	12/14→; +PR 1ZA / 1ZB / 1ZD / 1LV		**24.0125-0158.1** **24.0325-0158.1**	**425158** **525158**	Ø 312 Brake Disc Thickness [mm] 25 Minimum thickness [mm] 22 Vented + S Ø 312 Brake Disc Thickness [mm] 25 Minimum thickness [mm] 22 Vented + S
			→	12/14→; +PR 1KS / 1KT		**24.0110-0356.1**	**410356**	Ø 272 Brake Disc Thickness [mm] 9.7 Minimum thickness [mm] 8 + S
2.0 TDI	110	07/14→09/18	←	09/14→; +PR 1ZE / 1ZP		**24.0125-0145.1**	**425145**	Ø 288 Brake Disc Thickness [mm] 25 Minimum thickness [mm] 22 Vented + S
			←	09/14→; +PR 1ZA / 1ZB / 1ZD / 1LV		**24.0125-0158.1** **24.0325-0158.1**	**425158** **525158**	Ø 312 Brake Disc Thickness [mm] 25 Minimum thickness [mm] 22 Vented + S Ø 312 Brake Disc Thickness [mm] 25 Minimum thickness [mm] 22 Vented + S
			→	09/14→; +PR 1KS / 1KT		**24.0110-0356.1**	**410356**	Ø 272 Brake Disc Thickness [mm] 9.7 Minimum thickness [mm] 8 + S
2.0 TSI	155	12/12→07/19	←	05/13→; +PR 1ZE / 1ZP		**24.0125-0145.1**	**425145**	Ø 288 Brake Disc Thickness [mm] 25 Minimum thickness [mm] 22 Vented + S
			←	05/13→; +PR 1ZA / 1ZB / 1ZD / 1LV		**24.0125-0158.1** **24.0325-0158.1**	**425158** **525158**	Ø 312 Brake Disc Thickness [mm] 25 Minimum thickness [mm] 22 Vented + S Ø 312 Brake Disc Thickness [mm] 25 Minimum thickness [mm] 22 Vented + S
			→	05/13→; +PR 1KS / 1KT		**24.0110-0356.1**	**410356**	Ø 272 Brake Disc Thickness [mm] 9.7 Minimum thickness [mm] 8 + S
2.5	125	04/11→07/19	←	+PR 1ZE / 1ZP		**24.0125-0145.1**	**425145**	Ø 288 Brake Disc Thickness [mm] 25 Minimum thickness [mm] 22 Vented + S
			←	+PR 1ZA / 1ZB / 1ZD / 1LV		**24.0125-0158.1**	**425158**	Ø 312 Brake Disc Thickness [mm] 25 Minimum thickness [mm] 22 Vented + S
			→	+PR 1KS / 1KT		**24.0110-0356.1**	**410356**	Ø 272 Brake Disc Thickness [mm] 9.7 Minimum thickness [mm] 8 + S
Brake Hose								
1.2 TSI 1.2 TSI 16V 1.4 TSI	77 77 110 - 118	07/11→07/19 12/14→07/19 10/11→07/19	←		2	**24.5143-0584.3**	**331540**	L= 584

© 2022 Continental Aftermarket & Services GmbH

	kW				! #			
VW - BEETLE (5C1, 5C2) 04/11→07/19								
Brake Hose								
1.6 TDI 2.0 TDI 2.0 TFSI 2.0 TSI 2.5	77 103 147 130 - 162 125	10/11→07/16 04/11→07/16 04/11→07/16 12/14→07/19 04/11→07/19	←		2	**24.5143-0584.3**	**331540**	L= 584
2.0 TDI	81	06/14→09/18	←	12/14→	2	**24.5143-0584.3**	**331540**	L= 584
2.0 TDI	110	07/14→09/18	←	09/14→	2	**24.5143-0584.3**	**331540**	L= 584
2.0 TSI	155	12/12→07/19	←	05/13→	2	**24.5143-0584.3**	**331540**	L= 584
Slave Cylinder, clutch								
1.2 TSI 1.2 TSI 16V 1.4 TSI 1.6 TDI 2.0 TDI 2.0 TFSI 2.0 TSI 2.5	77 77 110 - 118 77 103 147 130 - 162 125	07/11→07/19 12/14→07/19 10/11→07/19 10/11→07/16 04/11→07/16 04/11→07/16 12/14→07/19 04/11→07/19		+PR 0EM		**24.2519-1706.3**	**040096**	Ø 19
2.0 TDI	81	06/14→09/18		12/14→; +PR 0EM		**24.2519-1706.3**	**040096**	Ø 19
2.0 TDI	110	07/14→09/18		09/14→; +PR 0EM		**24.2519-1706.3**	**040096**	Ø 19
2.0 TSI	155	12/12→07/19		05/13→; +PR 0EM		**24.2519-1706.3**	**040096**	Ø 19
VW - BEETLE Convertible (5C7, 5C8) 12/11→07/19								
Guide Bolt, brake caliper								
1.2 TSI 1.4 TSI 1.6 TDI 2.0 TDI 2.0 TFSI	77 118 77 103 147	12/11→07/19 12/11→07/16 12/11→07/16 04/12→07/16 12/11→07/16	←	11/12→; +PR 1ZE / 1ZP	2	**11.8171-0008.1**	**990049**	ATE
			←	11/12→; +PR 1ZA	2	**11.8171-0008.1**	**990049**	ATE
			←	11/12→; +PR 1LV / 1ZB	2	**11.8171-0008.1**	**990049**	ATE
1.2 TSI 16V 1.4 TSI 2.0 TDI 2.0 TSI	77 110 110 162	12/14→07/19 12/14→09/18 09/14→09/18 12/14→09/18	←	+PR 1ZE / 1ZP	2	**11.8171-0008.1**	**990049**	ATE
			←	+PR 1ZA	2	**11.8171-0008.1**	**990049**	ATE
			←	+PR 1LV / 1ZB	2	**11.8171-0008.1**	**990049**	ATE
2.0 TDI	81	06/14→09/18	←	12/14→; +PR 1LV / 1ZB	2	**11.8171-0008.1**	**990049**	ATE
			←	12/14→; +PR 1ZE / 1ZP	2	**11.8171-0008.1**	**990049**	ATE
			←	12/14→; +PR 1ZA	2	**11.8171-0008.1**	**990049**	ATE
2.0 TSI	155	12/12→07/19	←	05/13→; +PR 1ZE / 1ZP	2	**11.8171-0008.1**	**990049**	ATE
			←	05/13→; +PR 1LV / 1ZB	2	**11.8171-0008.1**	**990049**	ATE
			←	05/13→; +PR 1ZA	2	**11.8171-0008.1**	**990049**	ATE
2.5	125	12/11→07/16	←	12/12→; +PR 1ZE / 1ZP	2	**11.8171-0008.1**	**990049**	ATE
			←	12/12→; +PR 1ZA	2	**11.8171-0008.1**	**990049**	ATE
			←	12/12→; +PR 1LV / 1ZB	2	**11.8171-0008.1**	**990049**	ATE
Brake Disc								
1.2 TSI 1.4 TSI 1.6 TDI 2.0 TDI 2.0 TFSI	77 118 77 103 147	12/11→07/19 12/11→07/16 12/11→07/16 04/12→07/16 12/11→07/16	←	11/12→; +PR 1ZE / 1ZP		**24.0125-0145.1**	**425145**	Ø 288 Brake Disc Thickness [mm] 25 Minimum thickness [mm] 22 Vented + S
			←	11/12→; +PR 1ZA / 1ZB / 1LV		**24.0125-0158.1** **24.0325-0158.1**	**425158** **525158**	Ø 312 Brake Disc Thickness [mm] 25 Minimum thickness [mm] 22 Vented + S Ø 312 Brake Disc Thickness [mm] 25 Minimum thickness [mm] 22 Vented + S
			→	11/12→; +PR 1KS / 1KT		**24.0110-0356.1**	**410356**	Ø 272 Brake Disc Thickness [mm] 9.7 Minimum thickness [mm] 8 + S
1.2 TSI 16V 1.4 TSI 2.0 TDI 2.0 TSI	77 110 110 162	12/14→07/19 12/14→09/18 09/14→09/18 12/14→09/18	←	+PR 1ZE / 1ZP		**24.0125-0145.1**	**425145**	Ø 288 Brake Disc Thickness [mm] 25 Minimum thickness [mm] 22 Vented + S
			←	+PR 1ZA / 1ZB / 1LV		**24.0125-0158.1**	**425158**	Ø 312 Brake Disc Thickness [mm] 25 Minimum thickness [mm] 22 Vented + S

VW - BEETLE Convertible (5C7, 5C8) 12/11→07/19

Brake Disc

	kW				! #			
1.2 TSI 16V 1.4 TSI 2.0 TDI 2.0 TSI	77 110 110 162	12/14→07/19 12/14→09/18 09/14→09/18 12/14→09/18	←	+PR 1ZA / 1ZB / 1LV		**24.0325-0158.1**	**525158**	Ø 312 Brake Disc Thickness [mm] 25 Minimum thickness [mm] 22 Vented + S
			→	+PR 1KS / 1KT		**24.0110-0356.1**	**410356**	Ø 272 Brake Disc Thickness [mm] 9.7 Minimum thickness [mm] 8 + S
2.0 TDI	81	06/14→09/18	←	12/14→; +PR 1ZE / 1ZP		**24.0125-0145.1**	**425145**	Ø 288 Brake Disc Thickness [mm] 25 Minimum thickness [mm] 22 Vented + S
			←	12/14→; +PR 1ZA / 1ZB / 1LV		**24.0125-0158.1** **24.0325-0158.1**	**425158** **525158**	Ø 312 Brake Disc Thickness [mm] 25 Minimum thickness [mm] 22 Vented + S Ø 312 Brake Disc Thickness [mm] 25 Minimum thickness [mm] 22 Vented + S
			→	12/14→; +PR 1KS / 1KT		**24.0110-0356.1**	**410356**	Ø 272 Brake Disc Thickness [mm] 9.7 Minimum thickness [mm] 8 + S
2.0 TSI	155	12/12→07/19	←	05/13→; +PR 1ZE / 1ZP		**24.0125-0145.1**	**425145**	Ø 288 Brake Disc Thickness [mm] 25 Minimum thickness [mm] 22 Vented + S
			←	05/13→; +PR 1ZA / 1ZB / 1LV		**24.0125-0158.1** **24.0325-0158.1**	**425158** **525158**	Ø 312 Brake Disc Thickness [mm] 25 Minimum thickness [mm] 22 Vented + S Ø 312 Brake Disc Thickness [mm] 25 Minimum thickness [mm] 22 Vented + S
			→	05/13→; +PR 1KS / 1KT		**24.0110-0356.1**	**410356**	Ø 272 Brake Disc Thickness [mm] 9.7 Minimum thickness [mm] 8 + S
2.5	125	12/11→07/16	←	12/12→; +PR 1ZE / 1ZP		**24.0125-0145.1**	**425145**	Ø 288 Brake Disc Thickness [mm] 25 Minimum thickness [mm] 22 Vented + S
			←	12/12→; +PR 1ZA / 1ZB / 1LV		**24.0125-0158.1**	**425158**	Ø 312 Brake Disc Thickness [mm] 25 Minimum thickness [mm] 22 Vented + S
			→	12/12→; +PR 1KS / 1KT		**24.0110-0356.1**	**410356**	Ø 272 Brake Disc Thickness [mm] 9.7 Minimum thickness [mm] 8 + S

Brake Hose

1.2 TSI 1.4 TSI 1.6 TDI 2.0 TDI 2.0 TFSI	77 118 77 103 147	12/11→07/19 12/11→07/16 12/11→07/16 04/12→07/16 12/11→07/16	←	11/12→	2	**24.5143-0584.3**	**331540**	L= 584
1.2 TSI 16V 1.4 TSI 2.0 TDI 2.0 TSI	77 110 110 162	12/14→07/19 12/14→09/18 09/14→09/18 12/14→09/18	←		2	**24.5143-0584.3**	**331540**	L= 584
2.0 TDI	81	06/14→09/18	←	12/14→	2	**24.5143-0584.3**	**331540**	L= 584
2.0 TSI	155	12/12→07/19	←	05/13→	2	**24.5143-0584.3**	**331540**	L= 584
2.5	125	12/11→07/16	←	12/12→	2	**24.5143-0584.3**	**331540**	L= 584

Slave Cylinder, clutch

1.2 TSI 1.4 TSI 1.6 TDI 2.0 TDI 2.0 TFSI	77 118 77 103 147	12/11→07/19 12/11→07/16 12/11→07/16 04/12→07/16 12/11→07/16		11/12→; +PR 0EM		**24.2519-1706.3**	**040096**	Ø 19
1.2 TSI 16V 1.4 TSI 2.0 TDI 2.0 TSI	77 110 110 162	12/14→07/19 12/14→09/18 09/14→09/18 12/14→09/18		+PR 0EM		**24.2519-1706.3**	**040096**	Ø 19
2.0 TDI	81	06/14→09/18		12/14→; +PR 0EM		**24.2519-1706.3**	**040096**	Ø 19
2.0 TSI	155	12/12→07/19		05/13→; +PR 0EM		**24.2519-1706.3**	**040096**	Ø 19

© 2022 Continental Aftermarket & Services GmbH

	kW				! #			
VW - BEETLE Convertible (5C7, 5C8) 12/11→07/19								
Slave Cylinder, clutch								
2.5	125	12/11→07/16		12/12→; +PR 0EM		**24.2519-1706.3**	**040096**	Ø 19
VW - BORA (9M2) 01/05→12/14								
Guide Bolt, brake caliper								
2.0	85	01/05→12/14		1J-2W315309→; +PR 1LJ	2	**11.8171-0008.1**	**990049**	ATE
				→ 1J-2W315308; +PR 1LJ	2	**11.8171-0008.1**	**990049**	ATE
				+PR 1LN / 1ZD / 1ZE / 1ZH	2	**11.8171-0008.1**	**990049**	ATE
				+PR 1LR / 1LS / 1ZM / 1LQ / 1ZP	2	**11.8171-0008.1**	**990049**	ATE
				+PR 1ZQ	2	**11.8171-0008.1**	**990049**	ATE
Brake Disc								
2.0	85	01/05→12/14	➡	+PR 1KP / 1KT		**24.0109-0123.1**	**409123**	Ø 230 Brake Disc Thickness [mm] 9 Minimum thickness [mm] 7 + S
VW - BORA I (1J2) 10/98→12/13								
Guide Bolt, brake caliper								
1.4 16V 1.6 1.6 16V 1.6 FSI 1.8 1.8 4motion 1.9 SDI 1.9 TDI 1.9 TDI 4motion 2.0 2.0 4motion 2.3 V5 2.3 V5 4motion	55 74 - 75 77 81 92 92 50 74 74 85 85 125 125	03/00→05/05 10/98→05/05 05/00→05/05 01/02→05/05 10/98→05/05 02/99→05/05 10/98→05/05 09/00→05/05 09/00→05/05 10/98→12/13 04/00→05/05 10/00→05/05 10/00→05/05		→ 12/04; +PR 1LR / 1LS / 1ZM / 1LQ / 1ZP	2	**11.8171-0008.1**	**990049**	ATE
				→ 1J-2W315308; +PR 1LJ	2	**11.8171-0008.1**	**990049**	ATE
				→ 12/04; +PR 1LN / 1ZD / 1ZE / 1ZH	2	**11.8171-0008.1**	**990049**	ATE
				1J-2W315309→; → 12/04; +PR 1LJ	2	**11.8171-0008.1**	**990049**	ATE
				→ 12/04; +PR 1ZQ	2	**11.8171-0008.1**	**990049**	ATE
1.6 1.9 TDI 1.9 TDI 4motion 2.3 V5	78 81 85 110	06/02→10/04 10/98→06/01 02/99→06/01 10/98→10/00		1J-2W315309→; +PR 1LJ	2	**11.8171-0008.1**	**990049**	ATE
				→ 1J-2W315308; +PR 1LJ	2	**11.8171-0008.1**	**990049**	ATE
				+PR 1LN / 1ZD / 1ZE / 1ZH	2	**11.8171-0008.1**	**990049**	ATE
				+PR 1ZQ	2	**11.8171-0008.1**	**990049**	ATE
				+PR 1LR / 1LS / 1ZM / 1LQ / 1ZP	2	**11.8171-0008.1**	**990049**	ATE
1.8 T	110	05/00→05/05		09/00→ 12/04; +PR 1LN / 1ZD / 1ZE / 1ZH	2	**11.8171-0008.1**	**990049**	ATE
				09/00→ 12/04; +PR 1ZQ	2	**11.8171-0008.1**	**990049**	ATE
				09/00→ 12/04; +PR 1LR / 1LS / 1ZM / 1LQ / 1ZP	2	**11.8171-0008.1**	**990049**	ATE
				1J-2W315309→; → 12/04; +PR 1LJ	2	**11.8171-0008.1**	**990049**	ATE
				09/00→; → 1J-2W315308; +PR 1LJ	2	**11.8171-0008.1**	**990049**	ATE
1.8 T	132	03/02→05/05		05/02→ 12/04; +PR 1LN / 1ZD / 1ZE / 1ZH	2	**11.8171-0008.1**	**990049**	ATE
				05/02→ 12/04; +PR 1ZQ	2	**11.8171-0008.1**	**990049**	ATE
				05/02→ 12/04; +PR 1LR / 1LS / 1ZM / 1LQ / 1ZP	2	**11.8171-0008.1**	**990049**	ATE
				1J-2W315309→; → 12/04; +PR 1LJ	2	**11.8171-0008.1**	**990049**	ATE
				05/02→; → 1J-2W315308; +PR 1LJ	2	**11.8171-0008.1**	**990049**	ATE
1.9 TDI	66	10/98→05/05		→ 06/01; +PR 1LR / 1LS / 1ZM / 1LQ / 1ZP	2	**11.8171-0008.1**	**990049**	ATE
				→ 1J-2W315308; +PR 1LJ	2	**11.8171-0008.1**	**990049**	ATE
				→ 06/01; +PR 1LN / 1ZD / 1ZE / 1ZH	2	**11.8171-0008.1**	**990049**	ATE
				1J-2W315309→; → 06/01; +PR 1LJ	2	**11.8171-0008.1**	**990049**	ATE
				→ 06/01; +PR 1ZQ	2	**11.8171-0008.1**	**990049**	ATE
1.9 TDI 1.9 TDI 4motion	85 66	12/98→01/02 11/98→04/02		02/99→ 06/01; +PR 1LN / 1ZD / 1ZE / 1ZH	2	**11.8171-0008.1**	**990049**	ATE
				02/99→ 06/01; +PR 1LR / 1LS / 1ZM / 1LQ / 1ZP	2	**11.8171-0008.1**	**990049**	ATE
				02/99→ 06/01; +PR 1ZQ	2	**11.8171-0008.1**	**990049**	ATE
				1J-2W315309→; → 06/01; +PR 1LJ	2	**11.8171-0008.1**	**990049**	ATE
				02/99→; → 1J-2W315308; +PR 1LJ	2	**11.8171-0008.1**	**990049**	ATE
1.9 TDI 1.9 TDI 4motion	96 96	11/00→05/05 11/00→05/05		04/01→ 12/04; +PR 1ZQ	2	**11.8171-0008.1**	**990049**	ATE
				04/01→ 12/04; +PR 1LN / 1ZD / 1ZE / 1ZH	2	**11.8171-0008.1**	**990049**	ATE
				04/01→ 12/04; +PR 1LR / 1LS / 1ZM / 1LQ / 1ZP	2	**11.8171-0008.1**	**990049**	ATE
				1J-2W315309→; → 12/04; +PR 1LJ	2	**11.8171-0008.1**	**990049**	ATE

© 2022 Continental Aftermarket & Services GmbH

	kW				! #			
VW - BORA I (1J2) 10/98→12/13								
Guide Bolt, brake caliper								
1.9 TDI 1.9 TDI 4motion	96 96	11/00→05/05 11/00→05/05		04/01→; → 1J-2W315308; +PR 1LJ	2	**11.8171-0008.1**	**990049**	ATE
1.9 TDI 1.9 TDI 4motion	110 110	05/00→05/05 05/00→05/05		10/00→ 12/04; +PR 1ZQ	2	**11.8171-0008.1**	**990049**	ATE
				10/00→ 12/04; +PR 1LR / 1LS / 1ZM / 1LQ / 1ZP	2	**11.8171-0008.1**	**990049**	ATE
				10/00→ 12/04; +PR 1LN / 1ZD / 1ZE / 1ZH	2	**11.8171-0008.1**	**990049**	ATE
				1J-2W315309→; → 12/04; +PR 1LJ	2	**11.8171-0008.1**	**990049**	ATE
				10/00→; → 1J-2W315308; +PR 1LJ	2	**11.8171-0008.1**	**990049**	ATE
2.3 V5 4motion	110	12/98→10/00		02/99→; +PR 1LN / 1ZD / 1ZE / 1ZH	2	**11.8171-0008.1**	**990049**	ATE
				02/99→; +PR 1LR / 1LS / 1ZM / 1LQ / 1ZP	2	**11.8171-0008.1**	**990049**	ATE
				02/99→; +PR 1ZQ	2	**11.8171-0008.1**	**990049**	ATE
				1J-2W315309→; +PR 1LJ	2	**11.8171-0008.1**	**990049**	ATE
				02/99→; → 1J-2W315308; +PR 1LJ	2	**11.8171-0008.1**	**990049**	ATE
2.8 V6 4motion	150	03/99→05/05		05/99→ 12/04; +PR 1ZQ	2	**11.8171-0008.1**	**990049**	ATE
				05/99→ 12/04; +PR 1LR / 1LS / 1ZM / 1LQ / 1ZP	2	**11.8171-0008.1**	**990049**	ATE
				05/99→ 12/04; +PR 1LN / 1ZD / 1ZE / 1ZH	2	**11.8171-0008.1**	**990049**	ATE
				1J-2W315309→; → 12/04; +PR 1LJ	2	**11.8171-0008.1**	**990049**	ATE
				05/99→; → 1J-2W315308; +PR 1LJ	2	**11.8171-0008.1**	**990049**	ATE
Brake Disc								
1.4 16V 1.6 1.6 16V 1.6 FSI 1.8 1.8 4motion 1.9 SDI 1.9 TDI 1.9 TDI 4motion 2.0 2.0 4motion 2.3 V5 2.3 V5 4motion	55 74 - 75 77 81 92 92 50 74 74 85 85 125 125	03/00→05/05 10/98→05/05 05/00→05/05 01/02→05/05 10/98→05/05 02/99→05/05 10/98→05/05 09/00→05/05 09/00→05/05 10/98→12/13 04/00→05/05 10/00→05/05 10/00→05/05		→ 12/04; +PR 1KP / 1KT		**24.0109-0123.1**	**409123**	Ø 230 Brake Disc Thickness [mm] 9 Minimum thickness [mm] 7 + S
1.6 1.9 TDI 1.9 TDI 4motion 2.3 V5	78 81 85 110	06/02→10/04 10/98→06/01 02/99→06/01 10/98→10/00		+PR 1KP / 1KT		**24.0109-0123.1**	**409123**	Ø 230 Brake Disc Thickness [mm] 9 Minimum thickness [mm] 7 + S
1.8 T	110	05/00→05/05		09/00→ 12/04; +PR 1KP / 1KT		**24.0109-0123.1**	**409123**	Ø 230 Brake Disc Thickness [mm] 9 Minimum thickness [mm] 7 + S
1.8 T	132	03/02→05/05		05/02→ 12/04; +PR 1KP / 1KT		**24.0109-0123.1**	**409123**	Ø 230 Brake Disc Thickness [mm] 9 Minimum thickness [mm] 7 + S
1.9 TDI	66	10/98→05/05		→ 06/01; +PR 1KP / 1KT		**24.0109-0123.1**	**409123**	Ø 230 Brake Disc Thickness [mm] 9 Minimum thickness [mm] 7 + S
1.9 TDI 1.9 TDI 4motion	85 66	12/98→01/02 11/98→04/02		02/99→ 06/01; +PR 1KP / 1KT		**24.0109-0123.1**	**409123**	Ø 230 Brake Disc Thickness [mm] 9 Minimum thickness [mm] 7 + S
1.9 TDI 1.9 TDI 4motion	96 96	11/00→05/05 11/00→05/05		04/01→ 12/04; +PR 1KP / 1KT		**24.0109-0123.1**	**409123**	Ø 230 Brake Disc Thickness [mm] 9 Minimum thickness [mm] 7 + S
1.9 TDI 1.9 TDI 4motion	110 110	05/00→05/05 05/00→05/05		10/00→ 12/04; +PR 1KP / 1KT		**24.0109-0123.1**	**409123**	Ø 230 Brake Disc Thickness [mm] 9 Minimum thickness [mm] 7 + S
2.3 V5 4motion	110	12/98→10/00		02/99→; +PR 1KP / 1KT		**24.0109-0123.1**	**409123**	Ø 230 Brake Disc Thickness [mm] 9 Minimum thickness [mm] 7 + S
2.8 V6 4motion	150	03/99→05/05		05/99→ 12/04; +PR 1KP / 1KT		**24.0109-0123.1**	**409123**	Ø 230 Brake Disc Thickness [mm] 9 Minimum thickness [mm] 7 + S
VW - BORA Variant (1J6) 05/99→05/05								
Guide Bolt, brake caliper								
1.4 16V 1.6 1.6 16V 1.6 FSI 1.8 4motion	55 74 - 75 77 81 92	09/01→05/05 05/99→05/05 02/00→05/05 01/02→05/05 05/99→05/05		→ 12/04; +PR 1LR / 1LS / 1ZM / 1LQ / 1ZP	2	**11.8171-0008.1**	**990049**	ATE
				→ 1J-2W315308; +PR 1LJ	2	**11.8171-0008.1**	**990049**	ATE
				→ 12/04; +PR 1LN / 1ZD / 1ZE / 1ZH	2	**11.8171-0008.1**	**990049**	ATE
				1J-2W315309→; → 12/04; +PR 1LJ	2	**11.8171-0008.1**	**990049**	ATE

© 2022 Continental Aftermarket & Services GmbH

	kW				! #			
VW - BORA Variant (1J6) 05/99→05/05								
Guide Bolt, brake caliper								
1.8 T 1.9 TDI 1.9 TDI 4motion 2.0 2.0 4motion 2.3 V5 2.3 V5 4motion 2.8 V6 4motion	132 74 - 110 74 - 110 85 85 125 125 150	05/02→05/05 09/00→05/05 09/00→05/05 05/99→05/05 04/00→05/05 10/00→05/05 10/00→05/05 05/99→05/05		→ 12/04; +PR 1ZQ	2	**11.8171-0008.1**	**990049**	ATE
1.8 T	110	05/00→05/05		09/00→ 12/04; +PR 1ZQ	2	**11.8171-0008.1**	**990049**	ATE
				09/00→ 12/04; +PR 1LR / 1LS / 1ZM / 1LQ / 1ZP	2	**11.8171-0008.1**	**990049**	ATE
				09/00→ 12/04; +PR 1LN / 1ZD / 1ZE / 1ZH	2	**11.8171-0008.1**	**990049**	ATE
				1J-2W315309→; → 12/04; +PR 1LJ	2	**11.8171-0008.1**	**990049**	ATE
				09/00→; → 1J-2W315308; +PR 1LJ	2	**11.8171-0008.1**	**990049**	ATE
1.9 TDI	66	07/04→05/05		→ 1J-2W315308; +PR 1LJ	2	**11.8171-0008.1**	**990049**	ATE
1.9 TDI 1.9 TDI 4motion 2.3 V5 2.3 V5 4motion	81 - 85 85 110 110	05/99→06/01 05/99→06/01 05/99→10/00 05/99→10/00		1J-2W315309→; +PR 1LJ	2	**11.8171-0008.1**	**990049**	ATE
				→ 1J-2W315308; +PR 1LJ	2	**11.8171-0008.1**	**990049**	ATE
				+PR 1LR / 1LS / 1ZM / 1LQ / 1ZP	2	**11.8171-0008.1**	**990049**	ATE
				+PR 1LN / 1ZD / 1ZE / 1ZH	2	**11.8171-0008.1**	**990049**	ATE
				+PR 1ZQ	2	**11.8171-0008.1**	**990049**	ATE
1.9 TDI 1.9 TDI 4motion	96 96	11/00→05/05 11/00→05/05		04/01→ 12/04; +PR 1LN / 1ZD / 1ZE / 1ZH	2	**11.8171-0008.1**	**990049**	ATE
				04/01→ 12/04; +PR 1ZQ	2	**11.8171-0008.1**	**990049**	ATE
				04/01→ 12/04; +PR 1LR / 1LS / 1ZM / 1LQ / 1ZP	2	**11.8171-0008.1**	**990049**	ATE
				1J-2W315309→; → 12/04; +PR 1LJ	2	**11.8171-0008.1**	**990049**	ATE
				04/01→; → 1J-2W315308; +PR 1LJ	2	**11.8171-0008.1**	**990049**	ATE
2.0 4motion	88	12/99→05/03		04/00→; +PR 1LN / 1ZD / 1ZE / 1ZH	2	**11.8171-0008.1**	**990049**	ATE
				04/00→; +PR 1LR / 1LS / 1ZM / 1LQ / 1ZP	2	**11.8171-0008.1**	**990049**	ATE
				04/00→; +PR 1ZQ	2	**11.8171-0008.1**	**990049**	ATE
				1J-2W315309→; +PR 1LJ	2	**11.8171-0008.1**	**990049**	ATE
				04/00→; → 1J-2W315308; +PR 1LJ	2	**11.8171-0008.1**	**990049**	ATE
Brake Disc								
1.4 16V 1.6 1.6 16V 1.6 FSI 1.8 4motion 1.8 T 1.9 TDI 1.9 TDI 4motion 2.0 2.0 4motion 2.3 V5 2.3 V5 4motion 2.8 V6 4motion	55 74 - 75 77 81 92 132 74 - 110 74 - 110 85 85 125 125 150	09/01→05/05 05/99→05/05 02/00→05/05 01/02→05/05 05/99→05/05 05/02→05/05 09/00→05/05 09/00→05/05 05/99→05/05 04/00→05/05 10/00→05/05 10/00→05/05 05/99→05/05	➡	→ 12/04; +PR 1KP / 1KT		**24.0109-0123.1**	**409123**	Ø 230 Brake Disc Thickness [mm] 9 Minimum thickness [mm] 7 + S
1.8 T	110	05/00→05/05	➡	09/00→ 12/04; +PR 1KP / 1KT		**24.0109-0123.1**	**409123**	Ø 230 Brake Disc Thickness [mm] 9 Minimum thickness [mm] 7 + S
1.9 TDI 1.9 TDI 4motion 2.3 V5 2.3 V5 4motion	81 - 85 85 110 110	05/99→06/01 05/99→06/01 05/99→10/00 05/99→10/00	➡	+PR 1KP / 1KT		**24.0109-0123.1**	**409123**	Ø 230 Brake Disc Thickness [mm] 9 Minimum thickness [mm] 7 + S
1.9 TDI 1.9 TDI 4motion	96 96	11/00→05/05 11/00→05/05	➡	04/01→ 12/04; +PR 1KP / 1KT		**24.0109-0123.1**	**409123**	Ø 230 Brake Disc Thickness [mm] 9 Minimum thickness [mm] 7 + S
2.0 4motion	88	12/99→05/03	➡	04/00→; +PR 1KP / 1KT		**24.0109-0123.1**	**409123**	Ø 230 Brake Disc Thickness [mm] 9 Minimum thickness [mm] 7 + S
VW - CADDY III Box Body/MPV (2KA, 2KH, 2CA, 2CH) 03/04→05/15								
Guide Bolt, brake caliper								
1.2 TSI 1.4	63 - 77 55 - 59	09/10→05/15 03/04→08/10		+PR 1ZE	2	**11.8171-0008.1**	**990049**	ATE
				+PR 1LJ / 1ZA	2	**11.8171-0008.1**	**990049**	ATE

VW - CADDY III Box Body/MPV (2KA, 2KH, 2CA, 2CH) 03/04→05/15

Guide Bolt, brake caliper

	kW				! #			
1.6 1.6 BiFuel 1.6 TDI 1.9 TDI 1.9 TDI 4motion 2.0 EcoFuel 2.0 SDI 2.0 TDI 2.0 TDI 16V 2.0 TDI 16V 4motion 2.0 TDI 4motion	75 75 55 - 75 55 - 77 77 80 51 62 - 125 103 103 62	04/04→05/15 05/11→05/15 08/10→05/15 04/04→08/10 11/08→08/10 04/06→05/15 03/04→08/10 09/07→05/15 11/10→05/15 11/10→05/15 12/10→05/15		+PR 1ZE	2	**11.8171-0008.1**	**990049**	ATE
				+PR 1LJ / 1ZA	2	**11.8171-0008.1**	**990049**	ATE
2.0 TDI 2.0 TDI 4motion	81 81	08/10→05/15 08/10→05/15		10/10→; +PR 1ZE	2	**11.8171-0008.1**	**990049**	ATE
				10/10→; +PR 1LJ / 1ZA	2	**11.8171-0008.1**	**990049**	ATE

Brake Disc

1.2 TSI 1.4 1.6 1.6 BiFuel 1.6 TDI 1.9 TDI 1.9 TDI 4motion 2.0 EcoFuel 2.0 SDI 2.0 TDI 2.0 TDI 16V 2.0 TDI 16V 4motion 2.0 TDI 4motion	63 - 77 55 - 59 75 75 55 - 75 55 - 77 77 80 51 62 - 103 103 103 62	09/10→05/15 03/04→08/10 04/04→05/15 05/11→05/15 08/10→05/15 04/04→08/10 11/08→08/10 04/06→05/15 03/04→08/10 09/07→05/15 11/10→05/15 11/10→05/15 12/10→05/15	←	+PR 1ZE		**24.0125-0145.1**	**425145**	Ø 288 Brake Disc Thickness [mm] 25 Minimum thickness [mm] 22 Vented + S
			←	+PR 1LJ / 1ZA		**24.0125-0158.1** **24.0325-0158.1**	**425158** **525158**	Ø 312 Brake Disc Thickness [mm] 25 Minimum thickness [mm] 22 Vented + S Ø 312 Brake Disc Thickness [mm] 25 Minimum thickness [mm] 22 Vented + S
			→	2K-B-200 001→; +PR 1ZA / 1ZE / 1ZF / 2E3		**24.0110-0356.1**	**410356**	Ø 272 Brake Disc Thickness [mm] 9.7 Minimum thickness [mm] 8 + S
2.0 TDI	81	08/10→05/15	←	10/10→; +PR 1ZE		**24.0125-0145.1**	**425145**	Ø 288 Brake Disc Thickness [mm] 25 Minimum thickness [mm] 22 Vented + S
			←	10/10→; +PR 1LJ / 1ZA		**24.0125-0158.1**	**425158**	Ø 312 Brake Disc Thickness [mm] 25 Minimum thickness [mm] 22 Vented + S
			→	2K-B-200 001→; +PR 1ZA / 1ZE / 1ZF / 2E3		**24.0110-0356.1**	**410356**	Ø 272 Brake Disc Thickness [mm] 9.7 Minimum thickness [mm] 8 + S
2.0 TDI	125	05/12→05/15	←	+PR 1ZE		**24.0125-0145.1**	**425145**	Ø 288 Brake Disc Thickness [mm] 25 Minimum thickness [mm] 22 Vented + S
			←	+PR 1LJ / 1ZA		**24.0125-0158.1** **24.0325-0158.1**	**425158** **525158**	Ø 312 Brake Disc Thickness [mm] 25 Minimum thickness [mm] 22 Vented + S Ø 312 Brake Disc Thickness [mm] 25 Minimum thickness [mm] 22 Vented + S
			→	+PR 1ZA / 1ZE / 1ZF / 2E3		**24.0110-0356.1**	**410356**	Ø 272 Brake Disc Thickness [mm] 9.7 Minimum thickness [mm] 8 + S
2.0 TDI 4motion	81	08/10→05/15	←	10/10→; +PR 1ZE		**24.0125-0145.1**	**425145**	Ø 288 Brake Disc Thickness [mm] 25 Minimum thickness [mm] 22 Vented + S
			←	10/10→; +PR 1LJ / 1ZA		**24.0125-0158.1** **24.0325-0158.1**	**425158** **525158**	Ø 312 Brake Disc Thickness [mm] 25 Minimum thickness [mm] 22 Vented + S Ø 312 Brake Disc Thickness [mm] 25 Minimum thickness [mm] 22 Vented + S
			→	2K-B-200 001→; +PR 1ZA / 1ZE / 1ZF / 2E3		**24.0110-0356.1**	**410356**	Ø 272 Brake Disc Thickness [mm] 9.7 Minimum thickness [mm] 8 + S

© 2022 Continental Aftermarket & Services GmbH

	kW				! #			
VW - CADDY III Box Body/MPV (2KA, 2KH, 2CA, 2CH) 03/04→05/15								
Sensor, wheel speed								
1.9 TDI 4motion	77	11/08→08/10	➡			**24.0711-5401.3**	**360330**	
			➡			**24.0711-5402.3**	**360331**	
2.0 TDI	81	08/10→05/15	➡	10/10→; for vehicles with parking assistant system	2	**24.0711-6337.3**	**360390**	
2.0 TDI	125	05/12→05/15	➡	for vehicles with parking assistant system	2	**24.0711-6337.3**	**360390**	
2.0 TDI 4motion	62 - 81	08/10→05/15	➡	06/12→;		**24.0711-5401.3**	**360330**	
			➡	06/12→;		**24.0711-5402.3**	**360331**	
Slave Cylinder, clutch								
1.2 TSI	63 - 77	09/10→05/15		+PR 0EM		**24.2519-1706.3**	**040096**	Ø 19
1.4	55 - 59	03/04→08/10						
1.6	75	04/04→05/15						
1.6 BiFuel	75	05/11→05/15						
1.6 TDI	55 - 75	08/10→05/15						
1.9 TDI	55 - 77	04/04→08/10						
1.9 TDI 4motion	77	11/08→08/10						
2.0 EcoFuel	80	04/06→05/15						
2.0 SDI	51	03/04→08/10						
2.0 TDI	62 - 125	09/07→05/15						
2.0 TDI 16V	103	11/10→05/15						
2.0 TDI 16V 4motion	103	11/10→05/15						
2.0 TDI 4motion	62	12/10→05/15						
2.0 TDI	81	08/10→05/15		10/10→; +PR 0EM		**24.2519-1706.3**	**040096**	Ø 19
2.0 TDI 4motion	81	08/10→05/15						
VW - CADDY III MPV (2KB, 2KJ, 2CB, 2CJ) 03/04→05/15								
Guide Bolt, brake caliper								
1.2 TSI	63 - 77	09/10→05/15		+PR 1ZE	2	**11.8171-0008.1**	**990049**	ATE
1.4	55 - 59	03/04→08/10		+PR 1LJ / 1ZA	2	**11.8171-0008.1**	**990049**	ATE
1.6	75	04/04→05/15						
1.6 BiFuel	75	05/11→05/15						
1.6 TDI	55 - 75	08/10→05/15						
1.9 D	48	10/05→06/09						
1.9 TDI	55 - 77	04/04→08/10						
1.9 TDI 4motion	77	05/08→08/10						
2.0 EcoFuel	80	04/06→05/15						
2.0 SDI	51	03/04→08/10						
2.0 TDI	103 - 125	09/07→05/15						
2.0 TDI 16V	103	11/10→05/15						
2.0 TDI 16V 4motion	103	11/10→05/15						
2.0 TDI	81	08/10→05/15		10/10→; +PR 1ZE	2	**11.8171-0008.1**	**990049**	ATE
2.0 TDI 4motion	81	08/10→05/15		10/10→; +PR 1LJ / 1ZA	2	**11.8171-0008.1**	**990049**	ATE
Brake Disc								
1.2 TSI	63 - 77	09/10→05/15	⬅	+PR 1ZE		**24.0125-0145.1**	**425145**	Ø 288 Brake Disc Thickness [mm] 25 Minimum thickness [mm] 22 Vented + S
1.4	55 - 59	03/04→08/10						
1.6	75	04/04→05/15	⬅	+PR 1LJ / 1ZA		**24.0125-0158.1**	**425158**	Ø 312 Brake Disc Thickness [mm] 25 Minimum thickness [mm] 22 Vented + S
1.6 BiFuel	75	05/11→05/15						
1.6 TDI	55 - 75	08/10→05/15						
1.9 D	48	10/05→06/09						
1.9 TDI	55 - 77	04/04→08/10				**24.0325-0158.1**	**525158**	Ø 312 Brake Disc Thickness [mm] 25 Minimum thickness [mm] 22 Vented + S
1.9 TDI 4motion	77	05/08→08/10						
2.0 EcoFuel	80	04/06→05/15						
2.0 SDI	51	03/04→08/10	➡	2K-B-200 001→; +PR 1ZA / 1ZE / 1ZF / 2E3		**24.0110-0356.1**	**410356**	Ø 272 Brake Disc Thickness [mm] 9.7 Minimum thickness [mm] 8 + S
2.0 TDI	103	09/07→08/10						
2.0 TDI 16V	103	11/10→05/15						
2.0 TDI 16V 4motion	103	11/10→05/15						
2.0 TDI	81	08/10→05/15	⬅	10/10→; +PR 1ZE		**24.0125-0145.1**	**425145**	Ø 288 Brake Disc Thickness [mm] 25 Minimum thickness [mm] 22 Vented + S

	kW				! #			
VW - CADDY III MPV (2KB, 2KJ, 2CB, 2CJ) 03/04→05/15								
Brake Disc								
2.0 TDI	81	08/10→05/15	←	10/10→; +PR 1LJ / 1ZA		**24.0125-0158.1**	**425158**	Ø 312 Brake Disc Thickness [mm] 25 Minimum thickness [mm] 22 Vented + S
			→	2K-B-200 001→; +PR 1ZA / 1ZE / 1ZF / 2E3		**24.0110-0356.1**	**410356**	Ø 272 Brake Disc Thickness [mm] 9.7 Minimum thickness [mm] 8 + S
2.0 TDI	125	05/12→05/15	←	+PR 1ZE		**24.0125-0145.1**	**425145**	Ø 288 Brake Disc Thickness [mm] 25 Minimum thickness [mm] 22 Vented + S
			←	+PR 1LJ / 1ZA		**24.0125-0158.1** **24.0325-0158.1**	**425158** **525158**	Ø 312 Brake Disc Thickness [mm] 25 Minimum thickness [mm] 22 Vented + S Ø 312 Brake Disc Thickness [mm] 25 Minimum thickness [mm] 22 Vented + S
			→	+PR 1ZA / 1ZE / 1ZF / 2E3		**24.0110-0356.1**	**410356**	Ø 272 Brake Disc Thickness [mm] 9.7 Minimum thickness [mm] 8 + S
2.0 TDI 4motion	81	08/10→05/15	←	10/10→; +PR 1ZE		**24.0125-0145.1**	**425145**	Ø 288 Brake Disc Thickness [mm] 25 Minimum thickness [mm] 22 Vented + S
			←	10/10→; +PR 1LJ / 1ZA		**24.0125-0158.1** **24.0325-0158.1**	**425158** **525158**	Ø 312 Brake Disc Thickness [mm] 25 Minimum thickness [mm] 22 Vented + S Ø 312 Brake Disc Thickness [mm] 25 Minimum thickness [mm] 22 Vented + S
			→	2K-B-200 001→; +PR 1ZA / 1ZE / 1ZF / 2E3		**24.0110-0356.1**	**410356**	Ø 272 Brake Disc Thickness [mm] 9.7 Minimum thickness [mm] 8 + S
Sensor, wheel speed								
2.0 TDI	81	08/10→05/15	→	10/10→; for vehicles with parking assistant system	2	**24.0711-6337.3**	**360390**	
2.0 TDI	125	05/12→05/15	→	for vehicles with parking assistant system	2	**24.0711-6337.3**	**360390**	
2.0 TDI 16V 4motion	103	11/10→05/15	→	06/12→;		**24.0711-5401.3**	**360330**	
2.0 TDI 4motion	81	08/10→05/15	→	06/12→;		**24.0711-5402.3**	**360331**	
Slave Cylinder, clutch								
1.2 TSI	63 - 77	09/10→05/15		+PR 0EM		**24.2519-1706.3**	**040096**	Ø 19
1.4	55 - 59	03/04→08/10						
1.6	75	04/04→05/15						
1.6 BiFuel	75	05/11→05/15						
1.6 TDI	55 - 75	08/10→05/15						
1.9 D	48	10/05→06/09						
1.9 TDI	55 - 77	04/04→08/10						
1.9 TDI 4motion	77	05/08→08/10						
2.0 EcoFuel	80	04/06→05/15						
2.0 SDI	51	03/04→08/10						
2.0 TDI	103 - 125	09/07→05/15						
2.0 TDI 16V	103	11/10→05/15						
2.0 TDI 16V 4motion	103	11/10→05/15						
2.0 TDI	81	08/10→05/15		10/10→; +PR 0EM		**24.2519-1706.3**	**040096**	Ø 19
2.0 TDI 4motion	81	08/10→05/15						
VW - CADDY IV Box Body/MPV (SAA, SAH) 05/15→								
Brake Caliper								
1.0 TSI	75	11/15→09/20	←	+PR 1ZA;		**24.3571-1801.5**	**241387**	without holder
1.2 TSI	62	06/15→09/20						
1.4 TGI CNG	81	06/15→09/20	←	+PR 1ZA;		**24.3571-1802.5**	**241388**	without holder
1.4 TSI	92 - 96	05/15→09/20						
1.6	81	11/15→09/20						

© 2022 Continental Aftermarket & Services GmbH

VW - CADDY IV Box Body/MPV (SAA, SAH) 05/15→

	kW				! #			
Brake Caliper								
1.6 TDI	55 - 75	05/15→09/20	←	+PR 1ZA; ⊞		**24.3571-1801.5**	**241387**	without holder
2.0 TDI	55 - 110	05/15→09/20	←	+PR 1ZA; ⊞		**24.3571-1802.5**	**241388**	without holder
2.0 TDI 4motion	55 - 110	05/15→09/20						
ABT e-Caddy	83	04/20→						
Brake Pad Set, disc brake								
1.0 TSI	75	11/15→09/20	←	+PR 1ZE		**13.0460-2785.2**	**602785**	TRW 25683 20,4 + WE / + WK
1.4 TSI	92 - 96	05/15→09/20				**13.0470-2609.2**	**LD2609**	TRW + WE / - WK Ceramic
1.6 TDI	55 - 75	05/15→09/20				**13.0470-2785.2**	**LD2785**	TRW 25683 20,4 + WE / + WK Ceramic
2.0 TDI	55 - 110	05/15→09/20	←	+PR 1ZA		**13.0470-2609.2**	**LD2609**	TRW + WE / - WK Ceramic
2.0 TDI 4motion	110	11/15→09/20						
1.2 TSI	62	06/15→09/20	←	+PR 1ZA		**13.0460-2785.2**	**602785**	TRW 25683 20,4 + WE / + WK
1.4 TGI CNG	81	06/15→09/20				**13.0470-2609.2**	**LD2609**	TRW + WE / - WK Ceramic
1.6	81	11/15→09/20				**13.0470-2785.2**	**LD2785**	TRW 25683 20,4 + WE / + WK Ceramic
2.0 TDI	75	05/15→09/20						
2.0 TDI 4motion	55 - 103	05/15→09/20						
ABT e-Caddy	83	04/20→	←	+PR 1ZE		**13.0470-2609.2**	**LD2609**	TRW + WE / - WK Ceramic
Brake Disc								
1.0 TSI	75	11/15→09/20	←	+PR 1ZE		**24.0125-0145.1**	**425145**	Ø 288 Brake Disc Thickness [mm] 25 Minimum thickness [mm] 22 Vented + S
1.2 TSI	62	06/15→09/20						
1.4 TGI CNG	81	06/15→09/20						
1.4 TSI	92 - 96	05/15→09/20						
2.0 TDI	55 - 110	05/15→09/20	←	+PR 1ZA		**24.0125-0158.1**	**425158**	Ø 312 Brake Disc Thickness [mm] 25 Minimum thickness [mm] 22 Vented + S
2.0 TDI 4motion	55 - 110	05/15→09/20						
ABT e-Caddy	83	04/20→				**24.0325-0158.1**	**525158**	Ø 312 Brake Disc Thickness [mm] 25 Minimum thickness [mm] 22 Vented + S
			→			**24.0110-0356.1**	**410356**	Ø 272 Brake Disc Thickness [mm] 9.7 Minimum thickness [mm] 8 + S
1.6	81	11/15→09/20	←	+PR 1ZE		**24.0125-0145.1**	**425145**	Ø 288 Brake Disc Thickness [mm] 25 Minimum thickness [mm] 22 Vented + S
1.6 TDI	55 - 75	05/15→09/20						
2.0 TDI	103	05/15→09/20						
			←	+PR 1ZA		**24.0125-0158.1**	**425158**	Ø 312 Brake Disc Thickness [mm] 25 Minimum thickness [mm] 22 Vented + S
			→			**24.0110-0356.1**	**410356**	Ø 272 Brake Disc Thickness [mm] 9.7 Minimum thickness [mm] 8 + S
Sensor, wheel speed								
1.0 TSI	75	11/15→09/20	→	+PR 1BH / 1BJ / 7X0 / 7X1	2	**24.0711-6337.3**	**360390**	
1.2 TSI	62	06/15→09/20	→	+PR 7X5 / 7X6 / 7X7 / 7X9	2	**24.0711-6337.3**	**360390**	
1.4 TGI CNG	81	06/15→09/20						
1.4 TSI	92 - 96	05/15→09/20						
1.6	81	11/15→09/20						
1.6 TDI	55 - 75	05/15→09/20						
2.0 TDI	55 - 110	05/15→09/20						
2.0 TDI 4motion	55 - 110	05/15→09/20						
2.0 TDI 4motion	90 - 103	05/15→09/20	→	⊞		**24.0711-5401.3**	**360330**	
ABT e-Caddy	83	04/20→	→	⊞		**24.0711-5402.3**	**360331**	
Slave Cylinder, clutch								
1.0 TSI	75	11/15→09/20		+PR 0EM		**24.2519-1706.3**	**040096**	Ø 19
1.2 TSI	62	06/15→09/20						
1.4 TGI CNG	81	06/15→09/20						
1.4 TSI	92 - 96	05/15→09/20						
1.6	81	11/15→09/20						
1.6 TDI	55 - 75	05/15→09/20						

	kW				! #			
VW - CADDY IV Box Body/MPV (SAA, SAH) 05/15→								
Slave Cylinder, clutch								
2.0 TDI	55 - 110	05/15→09/20		+PR 0EM		**24.2519-1706.3**	**040096**	Ø 19
2.0 TDI 4motion	55 - 110	05/15→09/20						
ABT e-Caddy	83	04/20→						
VW - CADDY IV MPV (SAB, SAJ) 05/15→								
Brake Caliper								
1.0 TSI	62 - 75	11/15→09/20	←	+PR 1ZA; ⊞		**24.3571-1801.5**	**241387**	without holder
1.2 TSI	62	06/15→09/20	←	+PR 1ZA; ⊞		**24.3571-1802.5**	**241388**	without holder
1.4 TGI CNG	81	06/15→09/20						
1.4 TSI	92 - 96	05/15→09/20						
1.6	81	11/15→09/20						
1.6 TDI	55 - 75	05/15→09/20						
2.0 TDI	55 - 110	05/15→09/20						
2.0 TDI 4motion	81 - 110	05/15→09/20						
ABT e-Caddy	83	04/20→						
Brake Pad Set, disc brake								
1.0 TSI	62 - 75	11/15→09/20	←	+PR 1ZE		**13.0460-2785.2**	**602785**	TRW 25683 20,4 + WE / + WK
						13.0470-2609.2	**LD2609**	TRW + WE / - WK Ceramic
1.2 TSI	62	06/15→09/20				**13.0470-2785.2**	**LD2785**	TRW 25683 20,4 + WE / + WK Ceramic
1.4 TGI CNG	81	06/15→09/20						
1.6	81	11/15→09/20						
2.0 TDI	55 - 75	05/15→09/20	←	+PR 1ZA		**13.0470-2609.2**	**LD2609**	TRW + WE / - WK Ceramic
2.0 TDI 4motion	90	05/15→09/20						
1.4 TSI	92 - 96	05/15→09/20	←	+PR 1ZA		**13.0460-2785.2**	**602785**	TRW 25683 20,4 + WE / + WK
						13.0470-2609.2	**LD2609**	TRW + WE / - WK Ceramic
1.6 TDI	55 - 75	05/15→09/20				**13.0470-2785.2**	**LD2785**	TRW 25683 20,4 + WE / + WK Ceramic
2.0 TDI	103 - 110	05/15→09/20						
2.0 TDI 4motion	81 - 110	05/15→09/20	←	+PR 1ZE		**13.0470-2609.2**	**LD2609**	TRW + WE / - WK Ceramic
ABT e-Caddy	83	04/20→						
Brake Disc								
1.0 TSI	62 - 75	11/15→09/20	←	+PR 1ZE		**24.0125-0145.1**	**425145**	Ø 288 Brake Disc Thickness [mm] 25 Minimum thickness [mm] 22 Vented + S
1.2 TSI	62	06/15→09/20						
1.4 TGI CNG	81	06/15→09/20						
1.4 TSI	92 - 96	05/15→09/20	←	+PR 1ZA		**24.0125-0158.1**	**425158**	Ø 312 Brake Disc Thickness [mm] 25 Minimum thickness [mm] 22 Vented + S
2.0 TDI	55 - 110	05/15→09/20						
2.0 TDI 4motion	81 - 110	05/15→09/20						
ABT e-Caddy	83	04/20→				**24.0325-0158.1**	**525158**	Ø 312 Brake Disc Thickness [mm] 25 Minimum thickness [mm] 22 Vented + S
			→			**24.0110-0356.1**	**410356**	Ø 272 Brake Disc Thickness [mm] 9.7 Minimum thickness [mm] 8 + S
1.6	81	11/15→09/20	←	+PR 1ZE		**24.0125-0145.1**	**425145**	Ø 288 Brake Disc Thickness [mm] 25 Minimum thickness [mm] 22 Vented + S
1.6 TDI	55 - 75	05/15→09/20						
2.0 TDI	103	05/15→09/20						
2.0 TDI 4motion	103	05/15→09/20	←	+PR 1ZA		**24.0125-0158.1**	**425158**	Ø 312 Brake Disc Thickness [mm] 25 Minimum thickness [mm] 22 Vented + S
			→			**24.0110-0356.1**	**410356**	Ø 272 Brake Disc Thickness [mm] 9.7 Minimum thickness [mm] 8 + S
Sensor, wheel speed								
1.0 TSI	62 - 75	11/15→09/20	→	+PR 1BH / 1BJ / 7X0 / 7X1	2	**24.0711-6337.3**	**360390**	
1.2 TSI	62	06/15→09/20	→	+PR 7X5 / 7X6 / 7X7 / 7X9	2	**24.0711-6337.3**	**360390**	
1.4 TGI CNG	81	06/15→09/20						
1.4 TSI	92 - 96	05/15→09/20						
1.6	81	11/15→09/20						

© 2022 Continental Aftermarket & Services GmbH

	kW				! #			
VW - CADDY IV MPV (SAB, SAJ) 05/15→								
Sensor, wheel speed								
1.6 TDI	55 - 75	05/15→09/20	➡	+PR 1BH / 1BJ / 7X0 / 7X1	2	**24.0711-6337.3**	**360390**	
2.0 TDI 2.0 TDI 4motion	55 - 110 81 - 110	05/15→09/20 05/15→09/20	➡	+PR 7X5 / 7X6 / 7X7 / 7X9	2	**24.0711-6337.3**	**360390**	
2.0 TDI 4motion	90 - 103	05/15→09/20	➡	⊞		**24.0711-5401.3**	**360330**	
ABT e-Caddy	83	04/20→	➡	⊞		**24.0711-5402.3**	**360331**	
Slave Cylinder, clutch								
1.0 TSI	62 - 75	11/15→09/20		+PR 0EM		**24.2519-1706.3**	**040096**	Ø 19
1.2 TSI	62	06/15→09/20						
1.4 TGI CNG	81	06/15→09/20						
1.4 TSI	92 - 96	05/15→09/20						
1.6	81	11/15→09/20						
1.6 TDI	55 - 75	05/15→09/20						
2.0 TDI	55 - 110	05/15→09/20						
2.0 TDI 4motion	81 - 110	05/15→09/20						
ABT e-Caddy	83	04/20→						
VW - CADDY V Box Body/MPV (SBA, SBH) 09/20→								
Brake Caliper								
1.5 TSi EVO 1.6 SRE 2.0 TDi BMT	84 81 55 - 90	01/21→ 02/21→ 09/20→	⬅	+PR 1ZK; ⊞		**24.3571-1801.5**	**241387**	without holder
2.0 TDI BMT	90	02/21→	⬅	+PR 1ZK; ⊞		**24.3571-1802.5**	**241388**	without holder
Brake Pad Set, disc brake								
1.5 TSi EVO 1.6 SRE 2.0 TDi BMT 2.0 TDI BMT	84 81 55 - 90 90	01/21→ 02/21→ 09/20→ 02/21→	⬅	+PR 1ZK		**13.0470-2609.2**	**LD2609**	TRW + WE / - WK Ceramic
Brake Disc								
1.5 TSi EVO 1.6 SRE 2.0 TDi BMT 2.0 TDI BMT	84 81 55 - 90 90	01/21→ 02/21→ 09/20→ 02/21→	⬅	+PR 1ZE		**24.0125-0145.1**	**425145**	Ø 288 Brake Disc Thickness [mm] 25 Minimum thickness [mm] 22 Vented + S
			⬅	+PR 1ZK		**24.0125-0158.1**	**425158**	Ø 312 Brake Disc Thickness [mm] 25 Minimum thickness [mm] 22 Vented + S
			➡	+PR 1KE		**24.0110-0356.1**	**410356**	Ø 272 Brake Disc Thickness [mm] 9.7 Minimum thickness [mm] 8 + S
			➡	+PR 1KU		**24.0112-0210.1**	**412210**	Ø 300 Brake Disc Thickness [mm] 12 Minimum thickness [mm] 10 + S
Sensor, wheel speed								
1.5 TSi EVO 1.6 SRE 2.0 TDi BMT	84 81 55 - 90	01/21→ 02/21→ 09/20→	⬅	⊞		**24.0711-5273.3**	**360303**	
2.0 TDI BMT	90	02/21→	⬅	⊞		**24.0711-5274.3**	**360304**	
VW - CADDY V MPV (SBB, SBJ) 09/20→								
Brake Caliper								
1.5 TSi EVO 1.6 SRE 2.0 TDi BMT	84 81 55 - 90	01/21→ 02/21→ 09/20→	⬅	+PR 1ZK; ⊞		**24.3571-1801.5**	**241387**	without holder
2.0 TDI BMT	90	02/21→	⬅	+PR 1ZK; ⊞		**24.3571-1802.5**	**241388**	without holder
Brake Pad Set, disc brake								
1.5 TSi EVO 1.6 SRE 2.0 TDi BMT 2.0 TDI BMT	84 81 55 - 90 90	01/21→ 02/21→ 09/20→ 02/21→	⬅	+PR 1ZK		**13.0470-2609.2**	**LD2609**	TRW + WE / - WK Ceramic

© 2022 Continental Aftermarket & Services GmbH

	kW				! #			
VW - CADDY V MPV (SBB, SBJ) 09/20→								
Brake Disc								
1.5 TSi EVO 1.6 SRE 2.0 TDi BMT 2.0 TDI BMT	84 81 55 - 90 90	01/21→ 02/21→ 09/20→ 02/21→	←	+PR 1ZE		**24.0125-0145.1**	**425145**	Ø 288 Brake Disc Thickness [mm] 25 Minimum thickness [mm] 22 Vented + S
			←	+PR 1ZK		**24.0125-0158.1**	**425158**	Ø 312 Brake Disc Thickness [mm] 25 Minimum thickness [mm] 22 Vented + S
			→	+PR 1KE		**24.0110-0356.1**	**410356**	Ø 272 Brake Disc Thickness [mm] 9.7 Minimum thickness [mm] 8 + S
			→	+PR 1KU		**24.0112-0210.1**	**412210**	Ø 300 Brake Disc Thickness [mm] 12 Minimum thickness [mm] 10 + S
Sensor, wheel speed								
1.5 TSi EVO 1.6 SRE 2.0 TDi BMT 2.0 TDI BMT	84 81 55 - 90 90	01/21→ 02/21→ 09/20→ 02/21→	←	◪		**24.0711-5273.3**	**360303**	
			←	◩		**24.0711-5274.3**	**360304**	
VW - CADDY ALLTRACK Box Body/MPV (SAA) 05/15→								
Brake Caliper								
1.0 TSI 1.2 TSI 1.4 TGI CNG 1.4 TSI 1.6 SRE 1.6 TDI 2.0 TDI 2.0 TDI 4motion	75 62 81 92 - 96 81 55 - 75 55 - 110 81 - 110	11/15→ 06/15→ 06/15→ 05/15→ 11/15→09/20 05/15→ 05/15→ 05/15→	←	+PR 1ZA; ◪		**24.3571-1801.5**	**241387**	without holder
			←	+PR 1ZA; ◩		**24.3571-1802.5**	**241388**	without holder
Brake Pad Set, disc brake								
1.0 TSI 1.2 TSI 1.4 TGI CNG 1.4 TSI 1.6 SRE 1.6 TDI 2.0 TDI 2.0 TDI 4motion	75 62 81 92 81 55 55 - 103 81 - 110	11/15→ 06/15→ 06/15→ 05/15→ 11/15→09/20 05/15→11/17 05/15→ 05/15→	←	+PR 1ZE		**13.0460-2785.2** **13.0470-2609.2** **13.0470-2785.2**	**602785** **LD2609** **LD2785**	TRW 25683 20,4 + WE / + WK TRW + WE / - WK Ceramic TRW 25683 20,4 + WE / + WK Ceramic
			←	+PR 1ZA		**13.0470-2609.2**	**LD2609**	TRW + WE / - WK Ceramic
1.4 TSI 1.6 TDI 2.0 TDI 2.0 TDI 4motion	96 75 110 90	06/19→ 05/15→ 05/15→ 05/15→	←	+PR 1ZA		**13.0460-2785.2** **13.0470-2609.2** **13.0470-2785.2**	**602785** **LD2609** **LD2785**	TRW 25683 20,4 + WE / + WK TRW + WE / - WK Ceramic TRW 25683 20,4 + WE / + WK Ceramic
			←	+PR 1ZE		**13.0470-2609.2**	**LD2609**	TRW + WE / - WK Ceramic
Brake Disc								
1.0 TSI 1.2 TSI 1.4 TGI CNG 1.4 TSI 1.6 SRE 2.0 TDI 2.0 TDI 4motion	75 62 81 92 81 55 - 110 90 - 110	11/15→ 06/15→ 06/15→ 05/15→ 11/15→09/20 05/15→ 05/15→	←	+PR 1ZE		**24.0125-0145.1**	**425145**	Ø 288 Brake Disc Thickness [mm] 25 Minimum thickness [mm] 22 Vented + S
			←	+PR 1ZA		**24.0125-0158.1** **24.0325-0158.1**	**425158** **525158**	Ø 312 Brake Disc Thickness [mm] 25 Minimum thickness [mm] 22 Vented + S Ø 312 Brake Disc Thickness [mm] 25 Minimum thickness [mm] 22 Vented + S
			→			**24.0110-0356.1**	**410356**	Ø 272 Brake Disc Thickness [mm] 9.7 Minimum thickness [mm] 8 + S
1.4 TSI 1.6 TDI 2.0 TDI 2.0 TDI 4motion	96 55 - 75 103 81 - 103	06/19→ 05/15→ 05/15→ 05/15→	←	+PR 1ZE		**24.0125-0145.1**	**425145**	Ø 288 Brake Disc Thickness [mm] 25 Minimum thickness [mm] 22 Vented + S

© 2022 Continental Aftermarket & Services GmbH

	kW				! #			
VW - CADDY ALLTRACK Box Body/MPV (SAA) 05/15→								
Brake Disc								
1.4 TSI 1.6 TDI 2.0 TDI 2.0 TDI 4motion	96 55 - 75 103 81 - 103	06/19→ 05/15→ 05/15→ 05/15→	←	+PR 1ZA		**24.0125-0158.1**	**425158**	Ø 312 Brake Disc Thickness [mm] 25 Minimum thickness [mm] 22 Vented + S
			→			**24.0110-0356.1**	**410356**	Ø 272 Brake Disc Thickness [mm] 9.7 Minimum thickness [mm] 8 + S
Sensor, wheel speed								
1.0 TSI 1.2 TSI 1.4 TGI CNG 1.4 TSI 1.6 SRE 1.6 TDI 2.0 TDI 2.0 TDI 4motion	75 62 81 92 - 96 81 55 - 75 55 - 110 110	11/15→ 06/15→ 06/15→ 05/15→ 11/15→09/20 05/15→ 05/15→ 11/15→	→	+PR 1BH / 1BJ / 7X0 / 7X1	2	**24.0711-6337.3**	**360390**	
			→	+PR 7X5 / 7X6 / 7X7 / 7X9	2	**24.0711-6337.3**	**360390**	
2.0 TDI 4motion	81 - 103	05/15→	→	◪		**24.0711-5401.3**	**360330**	
			→	◩		**24.0711-5402.3**	**360331**	
Slave Cylinder, clutch								
1.0 TSI 1.2 TSI 1.4 TGI CNG 1.4 TSI 1.6 SRE 1.6 TDI 2.0 TDI 2.0 TDI 4motion	75 62 81 92 - 96 81 55 - 75 55 - 110 81 - 110	11/15→ 06/15→ 06/15→ 05/15→ 11/15→09/20 05/15→ 05/15→ 05/15→		+PR 0EM		**24.2519-1706.3**	**040096**	Ø 19
VW - CADDY ALLTRACK MPV (SAB) 05/15→								
Brake Caliper								
1.0 TSI	62 - 75	11/15→	←	+PR 1ZA; ◪		**24.3571-1801.5**	**241387**	without holder
1.2 TSI 1.4 TGI CNG 1.4 TSI 1.6 TDI 2.0 TDI 2.0 TDI 4motion	62 81 92 - 96 55 - 75 55 - 110 90 - 110	06/15→ 06/15→ 05/15→ 05/15→ 05/15→ 05/15→	←	+PR 1ZA; ◩		**24.3571-1802.5**	**241388**	without holder
2.0 TDI 4motion	81 - 103	05/15→	←	11/15→; +PR 1ZA; ◪		**24.3571-1801.5**	**241387**	without holder
			←	11/15→; +PR 1ZA; ◩		**24.3571-1802.5**	**241388**	without holder
Brake Pad Set, disc brake								
1.0 TSI 1.2 TSI 1.4 TGI CNG 1.4 TSI 1.6 TDI 2.0 TDI 2.0 TDI 4motion	62 62 81 92 55 55 - 110 81 - 110	11/18→ 06/15→ 06/15→ 05/15→ 05/15→11/17 05/15→ 05/15→	←	+PR 1ZE		**13.0460-2785.2** **13.0470-2609.2** **13.0470-2785.2**	**602785** **LD2609** **LD2785**	TRW 25683 20,4 + WE / + WK TRW + WE / - WK Ceramic TRW 25683 20,4 + WE / + WK Ceramic
			←	+PR 1ZA		**13.0470-2609.2**	**LD2609**	TRW + WE / - WK Ceramic
1.0 TSI 1.4 TSI 1.6 TDI 2.0 TDI 4motion	75 96 75 103	11/15→ 07/18→ 05/15→ 05/15→	←	+PR 1ZA		**13.0460-2785.2** **13.0470-2609.2** **13.0470-2785.2**	**602785** **LD2609** **LD2785**	TRW 25683 20,4 + WE / + WK TRW + WE / - WK Ceramic TRW 25683 20,4 + WE / + WK Ceramic
			←	+PR 1ZE		**13.0470-2609.2**	**LD2609**	TRW + WE / - WK Ceramic
Brake Disc								
1.0 TSI 1.4 TSI 1.6 TDI 2.0 TDI	62 96 55 - 75 103	11/18→ 07/18→ 05/15→ 05/15→	←	+PR 1ZE		**24.0125-0145.1**	**425145**	Ø 288 Brake Disc Thickness [mm] 25 Minimum thickness [mm] 22 Vented + S

	kW				! #			
VW - CADDY ALLTRACK MPV (SAB) 05/15→								
Brake Disc								
2.0 TDI 4motion	81 - 103	05/15→	←	+PR 1ZA		**24.0125-0158.1**	**425158**	Ø 312 Brake Disc Thickness [mm] 25 Minimum thickness [mm] 22 Vented + S
			→			**24.0110-0356.1**	**410356**	Ø 272 Brake Disc Thickness [mm] 9.7 Minimum thickness [mm] 8 + S
1.0 TSI 1.2 TSI 1.4 TGI CNG 1.4 TSI 2.0 TDI 2.0 TDI 4motion	75 62 81 92 55 - 110 90 - 110	11/15→ 06/15→ 06/15→ 05/15→ 05/15→ 05/15→	←	+PR 1ZE		**24.0125-0145.1**	**425145**	Ø 288 Brake Disc Thickness [mm] 25 Minimum thickness [mm] 22 Vented + S
			←	+PR 1ZA		**24.0125-0158.1** **24.0325-0158.1**	**425158** **525158**	Ø 312 Brake Disc Thickness [mm] 25 Minimum thickness [mm] 22 Vented + S Ø 312 Brake Disc Thickness [mm] 25 Minimum thickness [mm] 22 Vented + S
			→			**24.0110-0356.1**	**410356**	Ø 272 Brake Disc Thickness [mm] 9.7 Minimum thickness [mm] 8 + S
Sensor, wheel speed								
1.0 TSI	62 - 75	11/15→	→	+PR 1BH / 1BJ / 7X0 / 7X1	2	**24.0711-6337.3**	**360390**	
1.2 TSI 1.4 TGI CNG 1.4 TSI 1.6 TDI 2.0 TDI 2.0 TDI 4motion	62 81 92 - 96 55 - 75 55 - 110 81 - 110	06/15→ 06/15→ 05/15→ 05/15→ 05/15→ 05/15→	→	+PR 7X5 / 7X6 / 7X7 / 7X9	2	**24.0711-6337.3**	**360390**	
2.0 TDI 4motion	90	05/15→	→			**24.0711-5401.3**	**360330**	
			→			**24.0711-5402.3**	**360331**	
Slave Cylinder, clutch								
1.0 TSI	62 - 75	11/15→		+PR 0EM		**24.2519-1706.3**	**040096**	Ø 19
1.2 TSI 1.4 TGI CNG 1.4 TSI 1.6 TDI 2.0 TDI 2.0 TDI 4motion	62 81 92 - 96 55 - 75 55 - 110 81 - 110	06/15→ 06/15→ 05/15→ 05/15→ 05/15→ 05/15→						
VW - CADDY Box Body/MPV (6K9, 9E7, 9E9) 09/02→12/09								
Guide Bolt, brake caliper								
1.9 D	47	10/05→06/09		+PR 1ZE	2	**11.8171-0008.1**	**990049**	ATE
				+PR 1LJ / 1ZA	2	**11.8171-0008.1**	**990049**	ATE
Brake Disc								
1.9 D	47	10/05→06/09	←	+PR 1ZE		**24.0125-0145.1**	**425145**	Ø 288 Brake Disc Thickness [mm] 25 Minimum thickness [mm] 22 Vented + S
			←	+PR 1LJ / 1ZA		**24.0125-0158.1** **24.0325-0158.1**	**425158** **525158**	Ø 312 Brake Disc Thickness [mm] 25 Minimum thickness [mm] 22 Vented + S Ø 312 Brake Disc Thickness [mm] 25 Minimum thickness [mm] 22 Vented + S
			→	2K-B-200 001→; +PR 1ZA / 1ZE / 1ZF / 2E3		**24.0110-0356.1**	**410356**	Ø 272 Brake Disc Thickness [mm] 9.7 Minimum thickness [mm] 8 + S

© 2022 Continental Aftermarket & Services GmbH

	kW				! #			
VW - CADDY Box Body/MPV (6K9, 9E7, 9E9) 09/02→12/09								
Slave Cylinder, clutch								
1.9 D	47	10/05→06/09		+PR 0EM		**24.2519-1706.3**	**040096**	Ø 19
VW - CALIFORNIA T6 Camper (SGC, SGG, SHC) 04/15→								
Brake Pad Set, disc brake								
2.0 TDI	62 - 150	04/15→	→	+PR 1LA		**13.0460-3880.2**	**603880**	+ WE / - WK + Zub
2.0 TDI 4motion	103 - 150	06/15→				**13.0470-3880.2**	**LD3880**	+ WE / - WK + Zub Ceramic
2.0 TSI	110 - 150	04/15→07/19						
2.0 TSI 4motion	150	06/15→07/19						
Sensor, wheel speed								
2.0 TDI	62 - 132	04/15→12/19	→	+PR 6K2 / 6K3 / 7X0 / 7X2	2	**24.0711-6337.3**	**360390**	
2.0 TSI	110 - 150	04/15→07/19						
2.0 TDI	66 - 150	06/15→	←	08/20→;		**24.0711-5401.3**	**360330**	
			←	08/20→;		**24.0711-5402.3**	**360331**	
			→	+PR 6K2 / 6K3 / 7X0 / 7X2	2	**24.0711-6337.3**	**360390**	
2.0 TDI	110	04/15→	←	08/20→;		**24.0711-5402.3**	**360331**	
			→	+PR 6K2 / 6K3 / 7X0 / 7X2	2	**24.0711-6337.3**	**360390**	
2.0 TDI 4motion	103 - 132	06/15→12/19	→			**24.0711-5401.3**	**360330**	
2.0 TSI 4motion	150	06/15→07/19	→			**24.0711-5402.3**	**360331**	
2.0 TDI 4motion	110	08/15→	←	08/20→;		**24.0711-5402.3**	**360331**	
			→			**24.0711-5401.3**	**360330**	
			→			**24.0711-5402.3**	**360331**	
2.0 TDI 4motion	146	08/18→	←	08/20→;		**24.0711-5401.3**	**360330**	
			←	08/20→;		**24.0711-5402.3**	**360331**	
			→			**24.0711-5401.3**	**360330**	
			→			**24.0711-5402.3**	**360331**	
2.0 TDI 4motion	150	06/15→	←	08/20→;		**24.0711-5401.3**	**360330**	
			→			**24.0711-5401.3**	**360330**	
			→			**24.0711-5402.3**	**360331**	
VW - CC B7 (358) 11/11→12/16								
Brake Caliper								
1.4 TSI	110 - 118	11/11→12/16	←	+PR 1LA / 1LB;		**24.3601-1727.5**	**240786**	TRW without holder
1.4 TSI MultiFuel	118	11/11→12/16	←	+PR 1LA / 1LB;		**24.3601-1728.5**	**240787**	TRW without holder
1.8 TSI	112 - 118	11/11→12/16						
2.0 TDI	100 - 135	11/11→12/16						
2.0 TDI 4motion	103 - 130	11/11→12/16						
2.0 TFSI	147	11/11→12/16						
2.0 TSI	155	11/11→12/16						
3.6 FSI 4motion	220	11/11→12/16						
Guide Bolt, brake caliper								
1.4 TSI	110 - 118	11/11→12/16		+PR 1ZM / 1ZG	2	**11.8171-0008.1**	**990049**	ATE
1.4 TSI MultiFuel	118	11/11→12/16						
1.8 TSI	112 - 118	11/11→12/16						
2.0 TDI	100 - 135	11/11→12/16						
2.0 TDI 4motion	103 - 130	11/11→12/16						
2.0 TFSI	147	11/11→12/16						
2.0 TSI	155	11/11→12/16						
3.6 FSI 4motion	220	11/11→12/16						
Brake Disc								
1.4 TSI	110 - 118	11/11→12/16	←	+PR 1ZM / 1ZG		**24.0125-0158.1**	**425158**	Ø 312 Brake Disc Thickness [mm] 25 Minimum thickness [mm] 22 Vented + S
1.4 TSI MultiFuel	118	11/11→12/16						
1.8 TSI	118	11/11→12/16						

	kW				! #			
VW - CC B7 (358) 11/11→12/16								
Brake Disc								
2.0 TDI 2.0 TDI 4motion 2.0 TSI 3.6 FSI 4motion	103 - 135 103 - 130 155 220	11/11→12/16 11/11→12/16 11/11→12/16 11/11→12/16	←	+PR 1ZM / 1ZG		**24.0325-0158.1**	**525158**	Ø 312 Brake Disc Thickness [mm] 25 Minimum thickness [mm] 22 Vented + S
			←	+PR 1LA / 1LB		**24.0130-0225.1**	**430225**	Ø 340 Brake Disc Thickness [mm] 30 Minimum thickness [mm] 27 Vented + S
			→	+PR 2EA		**24.0122-0219.1**	**422219**	Ø 310 Brake Disc Thickness [mm] 22 Minimum thickness [mm] 20 Vented
1.8 TSI 2.0 TDI 2.0 TFSI	112 100 147	11/11→12/16 11/11→12/16 11/11→12/16	←	+PR 1ZM / 1ZG		**24.0125-0158.1**	**425158**	Ø 312 Brake Disc Thickness [mm] 25 Minimum thickness [mm] 22 Vented + S
			←	+PR 1LA / 1LB		**24.0130-0225.1**	**430225**	Ø 340 Brake Disc Thickness [mm] 30 Minimum thickness [mm] 27 Vented + S
			→	+PR 2EA		**24.0122-0219.1**	**422219**	Ø 310 Brake Disc Thickness [mm] 22 Minimum thickness [mm] 20 Vented
Sensor, wheel speed								
2.0 TDI 4motion 3.6 FSI 4motion	103 - 130 220	11/11→12/16 11/11→12/16	→			**24.0711-5401.3**	**360330**	
			→			**24.0711-5402.3**	**360331**	
VW - CRAFTER 30-35 Bus (2E_) 04/06→12/16								
Accessory Kit, parking brake shoes								
2.0 TDI	80 - 100	05/11→12/16		07/11→; +PR 0WC / 0WL		**03.0137-9700.2**	**669700**	
2.0 TDI 2.0 TDI 4motion 2.5 TDI	84 - 120 120 65 - 120	07/11→12/16 11/11→12/16 04/06→05/13		+PR 0WC / 0WL		**03.0137-9700.2**	**669700**	
VW - CRAFTER 30-50 Platform/Chassis (2F_) 04/06→12/16								
Accessory Kit, parking brake shoes								
2.0 TDI	80 - 100	05/11→12/16		07/11→; +PR 0WC / 0WL		**03.0137-9700.2**	**669700**	
2.0 TDI 2.0 TDI 4motion 2.5 TDI	84 - 120 120 65 - 120	07/11→12/16 11/11→12/16 04/06→05/13		+PR 0WC / 0WL		**03.0137-9700.2**	**669700**	
VW - CRAFTER 30-50 Van (2E_) 04/06→12/16								
Accessory Kit, parking brake shoes								
2.0 TDI	80 - 100	05/11→12/16		07/11→; +PR 0WC / 0WL		**03.0137-9700.2**	**669700**	
2.0 TDI 2.0 TDI 4motion 2.5 TDI	84 - 120 120 65 - 120	07/11→12/16 07/11→12/16 04/06→05/13		+PR 0WC / 0WL		**03.0137-9700.2**	**669700**	
VW - CRAFTER Bus (SYI, SYJ) 09/16→								
Brake Pad Set, disc brake								
2.0 TDI 2.0 TDI 4motion	75 - 130 103 - 130	09/16→ 03/17→	→	+PR 1LA		**13.0460-3880.2** **13.0470-3880.2**	**603880** **LD3880**	+ WE / - WK + Zub + WE / - WK + Zub Ceramic
Sensor, wheel speed								
2.0 TDI	75 - 130	09/16→	←	08/20→;		**24.0711-5401.3**	**360330**	
			←	08/20→;		**24.0711-5402.3**	**360331**	
			→	+PR 6K2 / 6K3 / 7X0 / 7X2	2	**24.0711-6337.3**	**360390**	
2.0 TDI 4motion	103 - 130	03/17→	←	08/20→;		**24.0711-5401.3**	**360330**	
			←	08/20→;		**24.0711-5402.3**	**360331**	

© 2022 Continental Aftermarket & Services GmbH

	kW				! #			
VW - CRAFTER Bus (SYI, SYJ) 09/16→								
Sensor, wheel speed								
2.0 TDI 4motion	103 - 130	03/17→	➡			**24.0711-5401.3**	**360330**	
			➡			**24.0711-5402.3**	**360331**	
VW - CRAFTER Platform/Chassis (SZ_) 11/16→								
Brake Pad Set, disc brake								
2.0 TDI 2.0 TDI 4motion 2.0 TDI RWD	75 - 130 103 - 130 80 - 130	11/16→ 03/17→ 11/16→	➡	+PR 1LA		**13.0460-3880.2** **13.0470-3880.2**	**603880** **LD3880**	+ WE / - WK + Zub + WE / - WK + Zub Ceramic
Sensor, wheel speed								
2.0 TDI	75 - 130	11/16→	⬅	08/20→;		**24.0711-5401.3**	**360330**	
			⬅	08/20→;		**24.0711-5402.3**	**360331**	
			➡	+PR 6K2 / 6K3 / 7X0 / 7X2	2	**24.0711-6337.3**	**360390**	
2.0 TDI 4motion	103 - 130	03/17→	⬅	08/20→;		**24.0711-5401.3**	**360330**	
			⬅	08/20→;		**24.0711-5402.3**	**360331**	
			➡			**24.0711-5401.3**	**360330**	
			➡			**24.0711-5402.3**	**360331**	
2.0 TDI RWD	80 - 130	11/16→	⬅	08/20→;		**24.0711-5401.3**	**360330**	
			⬅	08/20→;		**24.0711-5402.3**	**360331**	
			➡		2	**24.0711-6337.3**	**360390**	
VW - CRAFTER Van (SY_, SX_) 09/16→								
Brake Pad Set, disc brake								
2.0 TDI 2.0 TDI 4motion 2.0 TDI RWD	75 - 130 103 - 130 80 - 130	09/16→ 03/17→ 05/17→	➡	+PR 1LA		**13.0460-3880.2** **13.0470-3880.2**	**603880** **LD3880**	+ WE / - WK + Zub + WE / - WK + Zub Ceramic
e-Crafter	100	07/18→	➡			**13.0460-3880.2** **13.0470-3880.2**	**603880** **LD3880**	+ WE / - WK + Zub + WE / - WK + Zub Ceramic
Sensor, wheel speed								
2.0 TDI	75 - 130	09/16→	⬅	08/20→;		**24.0711-5401.3**	**360330**	
			⬅	08/20→;		**24.0711-5402.3**	**360331**	
			➡	+PR 6K2 / 6K3 / 7X0 / 7X2	2	**24.0711-6337.3**	**360390**	
2.0 TDI 4motion	103 - 130	03/17→	⬅	08/20→;		**24.0711-5401.3**	**360330**	
			⬅	08/20→;		**24.0711-5402.3**	**360331**	
			➡			**24.0711-5401.3**	**360330**	
			➡			**24.0711-5402.3**	**360331**	
2.0 TDI RWD	80 - 130	05/17→	⬅	08/20→;		**24.0711-5401.3**	**360330**	
			⬅	08/20→;		**24.0711-5402.3**	**360331**	
			➡		2	**24.0711-6337.3**	**360390**	
e-Crafter	100	07/18→	⬅	08/20→;		**24.0711-5401.3**	**360330**	
			⬅	08/20→;		**24.0711-5402.3**	**360331**	
			➡	10/18→	2	**24.0711-6337.3**	**360390**	
VW - EOS (1F7, 1F8) 03/06→08/15								
Guide Bolt, brake caliper								
1.4 TSI 1.6 FSI 2.0 TDI 2.0 TDI 16V 2.0 TSI 3.2 V6 3.6 V6	90 - 118 85 103 103 155 184 191	11/07→08/15 06/06→05/08 06/06→05/08 05/08→08/15 11/09→08/15 06/06→05/09 05/09→11/10		+PR 1ZE	2	**11.8171-0008.1**	**990049**	ATE
				+PR 1LJ / 1ZA / 1ZD	2	**11.8171-0008.1**	**990049**	ATE
				+PR 1LK	2	**11.8171-0008.1**	**990049**	ATE
2.0 FSI 2.0 TFSI	110 147	03/06→05/08 03/06→08/15		05/06→; +PR 1ZE	2	**11.8171-0008.1**	**990049**	ATE
				05/06→; +PR 1LJ / 1ZA / 1ZD	2	**11.8171-0008.1**	**990049**	ATE
				05/06→; +PR 1LK	2	**11.8171-0008.1**	**990049**	ATE

	kW				! #			
VW - EOS (1F7, 1F8) 03/06→08/15								
Guide Bolt, brake caliper								
2.0 TDI	100	11/10→08/15			2	**11.8171-0008.1**	**990049**	ATE
				+PR 1ZE	2	**11.8171-0008.1**	**990049**	ATE
				+PR 1LJ / 1ZA / 1ZD	2	**11.8171-0008.1**	**990049**	ATE
Brake Disc								
1.4 TSI 1.6 FSI 2.0 TDI 2.0 TDI 16V 2.0 TSI 3.2 V6 3.6 V6	90 - 118 85 100 - 103 103 155 184 191	11/07→08/15 06/06→05/08 06/06→08/15 05/08→08/15 11/09→08/15 06/06→05/09 05/09→11/10	←	+PR 1ZE		**24.0125-0145.1**	**425145**	Ø 288 Brake Disc Thickness [mm] 25 Minimum thickness [mm] 22 Vented + S
			←	+PR 1LJ / 1ZA / 1ZD		**24.0125-0158.1** **24.0325-0158.1**	**425158** **525158**	Ø 312 Brake Disc Thickness [mm] 25 Minimum thickness [mm] 22 Vented + S Ø 312 Brake Disc Thickness [mm] 25 Minimum thickness [mm] 22 Vented + S
			→	+PR 1KS		**24.0110-0356.1**	**410356**	Ø 272 Brake Disc Thickness [mm] 9.7 Minimum thickness [mm] 8 + S
			→	+PR 2EA		**24.0122-0219.1**	**422219**	Ø 310 Brake Disc Thickness [mm] 22 Minimum thickness [mm] 20 Vented
2.0 FSI 2.0 TFSI	110 147	03/06→05/08 03/06→08/15	←	05/06→; +PR 1ZE		**24.0125-0145.1**	**425145**	Ø 288 Brake Disc Thickness [mm] 25 Minimum thickness [mm] 22 Vented + S
			←	05/06→; +PR 1LJ / 1ZA / 1ZD		**24.0125-0158.1** **24.0325-0158.1**	**425158** **525158**	Ø 312 Brake Disc Thickness [mm] 25 Minimum thickness [mm] 22 Vented + S Ø 312 Brake Disc Thickness [mm] 25 Minimum thickness [mm] 22 Vented + S
			→	05/06→; +PR 1KS		**24.0110-0356.1**	**410356**	Ø 272 Brake Disc Thickness [mm] 9.7 Minimum thickness [mm] 8 + S
			→	05/06→; +PR 2EA		**24.0122-0219.1**	**422219**	Ø 310 Brake Disc Thickness [mm] 22 Minimum thickness [mm] 20 Vented
Slave Cylinder, clutch								
1.4 TSI 1.6 FSI 2.0 TDI 2.0 TDI 16V 2.0 TSI 3.2 V6 3.6 V6	90 - 118 85 100 - 103 103 155 184 191	11/07→08/15 06/06→05/08 06/06→08/15 05/08→08/15 11/09→08/15 06/06→05/09 05/09→11/10		+PR 0EM		**24.2519-1706.3**	**040096**	Ø 19
2.0 FSI 2.0 TFSI	110 147	03/06→05/08 03/06→08/15		05/06→; +PR 0EM		**24.2519-1706.3**	**040096**	Ø 19
VW - FOX Hatchback (5Z1, 5Z3, 5Z4) 08/03→10/15								
Brake Master Cylinder								
1.2 1.4 1.4 TDI	40 55 51	04/05→07/11 04/05→12/09 04/05→12/09		+PR 1ZN; - ABS		**24.2119-1712.3**	**010912**	Ø 19 without brake fluid reservoir
1.2 1.6 1.6 Total Flex	44 74 74	09/10→12/11 10/03→08/14 10/03→08/14		→ 08/11; +PR 1ZN; - ABS		**24.2119-1712.3**	**010912**	Ø 19 without brake fluid reservoir
Sensor, wheel speed								
1.2 1.4 1.4 TDI	40 55 51	04/05→07/11 04/05→12/09 04/05→12/09	←	⊞		**24.0711-5273.3**	**360303**	
			←	⊞		**24.0711-5274.3**	**360304**	
1.2 1.6 1.6 Total Flex	44 74 74	09/10→12/11 10/03→08/14 10/03→08/14	←	→ 08/11; ⊞		**24.0711-5273.3**	**360303**	
			←	→ 08/11; ⊞		**24.0711-5274.3**	**360304**	
Slave Cylinder, clutch								
1.2	40	04/05→07/11				**24.2519-1706.3**	**040096**	Ø 19

© 2022 Continental Aftermarket & Services GmbH

	kW				! #			
VW - FOX Hatchback (5Z1, 5Z3, 5Z4) 08/03→10/15								
Slave Cylinder, clutch								
1.4 1.4 TDI	55 51	04/05→12/09 04/05→12/09				**24.2519-1706.3**	**040096**	Ø 19
1.2 1.6 1.6 Total Flex	44 74 74	09/10→12/11 10/03→08/14 10/03→08/14		→ 08/11		**24.2519-1706.3**	**040096**	Ø 19
VW - FOX Van (5Z1) 09/10→12/11								
Brake Master Cylinder								
1.2	44	09/10→12/11		→ 08/11; +PR 1ZN; - ABS		**24.2119-1712.3**	**010912**	Ø 19 without brake fluid reservoir
Sensor, wheel speed								
1.2	44	09/10→12/11	←	→ 08/11; ■		**24.0711-5273.3**	**360303**	
			←	→ 08/11; ■		**24.0711-5274.3**	**360304**	
Slave Cylinder, clutch								
1.2	44	09/10→12/11		→ 08/11		**24.2519-1706.3**	**040096**	Ø 19
VW - GOLF III (1H1) 10/89→07/98								
Guide Bolt, brake caliper								
2.0 2.0 GTI 16V	85 110	11/91→08/97 08/92→08/97	←	05/96→	2	**11.8171-0008.1**	**990049**	ATE
2.8 VR6	120	08/95→09/97	←	1H-S-400001→; → 08/97	2	**11.8171-0008.1**	**990049**	ATE
2.8 VR6	128	01/92→08/97	←	1H-S-400001→	2	**11.8171-0008.1**	**990049**	ATE
2.9 VR6 Syncro	140	10/94→08/97	←		2	**11.8171-0008.1**	**990049**	ATE
VW - GOLF III Variant (1H5) 07/93→04/99								
Guide Bolt, brake caliper								
2.9 VR6 Syncro	140	10/94→04/99	←	07/95→	2	**11.8171-0008.1**	**990049**	ATE
VW - GOLF IV (1J1) 08/97→04/08								
Guide Bolt, brake caliper								
1.8 T 2.3 V5	110 110	08/97→06/05 08/97→10/00		1J-Y-115041→ 1J-2-315308; +PR 1LJ / 1ZQ	2	**11.8171-0008.1**	**990049**	ATE
				1J-2-315309→; +PR 1LJ / 1ZQ	2	**11.8171-0008.1**	**990049**	ATE
			←	10/97→; +PR 1LE / 1LN / 1ZE / 1ZH	2	**11.8171-0008.1**	**990049**	ATE
			←	10/97→; → 1J-YB115040; +PR 1LJ / 1ZQ	2	**11.8171-0008.1**	**990049**	ATE
1.8 T GTI	132	08/01→06/05		→ 10/03	2	**11.8171-0008.1**	**990049**	ATE
1.9 TDI 1.9 TDI 4motion	96 96	11/00→06/05 11/00→06/05	←	04/01→ 10/03; +PR 1LE / 1LN / 1ZE / 1ZH	2	**11.8171-0008.1**	**990049**	ATE
1.9 TDI 1.9 TDI 4motion	110 110	05/00→06/05 02/00→06/05	←	09/00→ 10/03; +PR 1LE / 1LN / 1ZE / 1ZH	2	**11.8171-0008.1**	**990049**	ATE
2.3 V5 2.3 V5 4motion 2.8 VR6 4motion	125 125 150	10/00→06/05 10/00→06/05 03/99→06/05		1J-Y-115041→ 1J-2-315308; +PR 1LJ / 1ZQ	2	**11.8171-0008.1**	**990049**	ATE
				1J-2-315309→; → 10/03; +PR 1LJ / 1ZQ	2	**11.8171-0008.1**	**990049**	ATE
			←	→ 1J-YB115040; +PR 1LJ / 1ZQ	2	**11.8171-0008.1**	**990049**	ATE
			←	→ 10/03; +PR 1LE / 1LN / 1ZE / 1ZH	2	**11.8171-0008.1**	**990049**	ATE
2.3 V5 4motion 2.8 VR6	110 147	12/98→10/00 03/02→06/05		1J-Y-115041→ 1J-2-315308; +PR 1LJ / 1ZQ	2	**11.8171-0008.1**	**990049**	ATE
				1J-2-315309→; +PR 1LJ / 1ZQ	2	**11.8171-0008.1**	**990049**	ATE
			←	→ 1J-YB115040; +PR 1LJ / 1ZQ	2	**11.8171-0008.1**	**990049**	ATE
			←	+PR 1LE / 1LN / 1ZE / 1ZH	2	**11.8171-0008.1**	**990049**	ATE
3.2 R32 4motion	177	09/02→06/05		→ 10/03; +PR 1ZT	2	**11.8171-0008.1**	**990049**	ATE
Brake Disc								
1.4 16V 1.6 1.6 16V 1.6 FSI 2.3 V5	55 75 77 81 125	10/97→05/04 08/00→06/05 02/00→06/05 01/02→06/05 10/00→06/05	→	→ 10/03; +PR 1KK / 1KS / 1KV / 1KQ / 1KW		**24.0109-0123.1**	**409123**	Ø 230 Brake Disc Thickness [mm] 9 Minimum thickness [mm] 7 + S
1.6 1.8 1.9 SDI 1.9 TDI	74 92 50 81	08/97→05/04 08/97→06/05 08/97→06/05 08/97→05/04	→	10/97→ 10/03; +PR 1KK / 1KS / 1KV / 1KQ / 1KW		**24.0109-0123.1**	**409123**	Ø 230 Brake Disc Thickness [mm] 9 Minimum thickness [mm] 7 + S
1.6 1.9 TDI 2.0 BiFuel	74 74 85	02/01→03/07 09/00→06/05 05/02→05/03	→	+PR 1KK / 1KS / 1KV / 1KQ / 1KW		**24.0109-0123.1**	**409123**	Ø 230 Brake Disc Thickness [mm] 9 Minimum thickness [mm] 7 + S

	kW				! #			
VW - GOLF IV (1J1) 08/97→04/08								
Brake Disc								
1.8 T 2.3 V5	110 110	08/97→06/05 08/97→10/00	➡	10/97→; +PR 1KK / 1KS / 1KV / 1KQ / 1KW		**24.0109-0123.1**	**409123**	Ø 230 Brake Disc Thickness [mm] 9 Minimum thickness [mm] 7 + S
1.9 TDI	66	10/97→05/04	➡	→ 06/01; +PR 1KK / 1KS / 1KV / 1KQ / 1KW		**24.0109-0123.1**	**409123**	Ø 230 Brake Disc Thickness [mm] 9 Minimum thickness [mm] 7 + S
1.9 TDI	85	12/98→06/01	➡	05/99→; +PR 1KK / 1KS / 1KV / 1KQ / 1KW		**24.0109-0123.1**	**409123**	Ø 230 Brake Disc Thickness [mm] 9 Minimum thickness [mm] 7 + S
1.9 TDI	96	11/00→06/05	➡	04/01→ 10/03; +PR 1KK / 1KS / 1KV / 1KQ / 1KW		**24.0109-0123.1**	**409123**	Ø 230 Brake Disc Thickness [mm] 9 Minimum thickness [mm] 7 + S
1.9 TDI	110	05/00→06/05	➡	09/00→ 10/03; +PR 1KK / 1KS / 1KV / 1KQ / 1KW		**24.0109-0123.1**	**409123**	Ø 230 Brake Disc Thickness [mm] 9 Minimum thickness [mm] 7 + S
2.0	85	07/98→05/04	➡	08/98→ 10/03; +PR 1KK / 1KS / 1KV / 1KQ / 1KW		**24.0109-0123.1**	**409123**	Ø 230 Brake Disc Thickness [mm] 9 Minimum thickness [mm] 7 + S
VW - GOLF IV (9B3) 03/06→								
Guide Bolt, brake caliper								
1.6 1.6 Total Flex 1.8 GTI 2.0	74 74 - 77 132 - 142 85	03/07→12/10 03/07→06/14 01/07→12/10 01/07→12/10		+PR 1ZE / 1ZP	2	**11.8171-0008.1**	**990049**	ATE
				+PR 1LJ / 1LL / 1LV / 1ZA / 1ZB / 1ZD	2	**11.8171-0008.1**	**990049**	ATE
				+PR 1LM	2	**11.8171-0008.1**	**990049**	ATE
				+PR 1ZK	2	**11.8171-0008.1**	**990049**	ATE
Brake Disc								
1.6 1.6 Total Flex 1.8 GTI 2.0	74 74 - 77 132 - 142 85	03/07→12/10 03/07→06/14 01/07→12/10 01/07→12/10	⬅	+PR 1ZE / 1ZP		**24.0125-0145.1**	**425145**	Ø 288 Brake Disc Thickness [mm] 25 Minimum thickness [mm] 22 Vented + S
			⬅	+PR 1LJ / 1LL / 1LV / 1ZA / 1ZB / 1ZD		**24.0125-0158.1**	**425158**	Ø 312 Brake Disc Thickness [mm] 25 Minimum thickness [mm] 22 Vented + S
			➡	+PR 1KS / 1KT		**24.0110-0356.1**	**410356**	Ø 272 Brake Disc Thickness [mm] 9.7 Minimum thickness [mm] 8 + S
Slave Cylinder, clutch								
1.6 1.6 Total Flex 1.8 GTI 2.0	74 74 - 77 132 - 142 85	03/07→12/10 03/07→06/14 01/07→12/10 01/07→12/10		+PR 0EM		**24.2519-1706.3**	**040096**	Ø 19
VW - GOLF IV Van (1J1) 10/97→05/04								
Guide Bolt, brake caliper								
1.9 TDI	96	04/01→05/04	⬅	→ 10/03; +PR 1LE / 1LN / 1ZE / 1ZH	2	**11.8171-0008.1**	**990049**	ATE
Brake Disc								
1.9 TDI	66	05/00→09/02	➡	→ 06/01; +PR 1KK / 1KS / 1KV / 1KQ / 1KW		**24.0109-0123.1**	**409123**	Ø 230 Brake Disc Thickness [mm] 9 Minimum thickness [mm] 7 + S
1.9 TDI	96	04/01→05/04	➡	→ 06/01; +PR 1KK / 1KS / 1KV / 1KQ / 1KW		**24.0109-0123.1**	**409123**	Ø 230 Brake Disc Thickness [mm] 9 Minimum thickness [mm] 7 + S
			➡	→ 10/03; +PR 1KK / 1KS / 1KV / 1KQ / 1KW		**24.0109-0123.1**	**409123**	Ø 230 Brake Disc Thickness [mm] 9 Minimum thickness [mm] 7 + S
VW - GOLF IV Variant (1J5) 05/99→06/06								
Guide Bolt, brake caliper								
1.8 T 1.9 TDI 1.9 TDI 4motion 2.3 V5 2.3 V5 4motion	110 110 110 110 - 125 110 - 125	05/00→06/06 06/01→06/06 05/02→06/05 05/99→06/06 05/99→06/06	⬅	+PR 1ZD / 1ZE	2	**11.8171-0008.1**	**990049**	ATE
1.9 TDI 1.9 TDI 4motion	96 96	11/00→06/06 11/00→06/06	⬅	04/01→; +PR 1ZD / 1ZE	2	**11.8171-0008.1**	**990049**	ATE

© 2022 Continental Aftermarket & Services GmbH

	kW				! #			
VW - GOLF IV Variant (1J5) 05/99→06/06								
Guide Bolt, brake caliper								
2.8 V6 4motion	150	05/99→06/06	←		2	**11.8171-0008.1**	**990049**	ATE
Brake Disc								
1.4 16V 1.6 1.6 16V 1.6 FSI 1.8 T 1.9 SDI 1.9 TDI 2.0 2.0 Bi-Fuel 2.3 V5	55 74 - 75 77 81 110 50 66 - 110 85 85 110 - 125	05/99→06/06 05/99→06/06 02/00→06/06 01/02→06/06 05/00→06/06 05/99→06/06 05/99→06/06 05/99→06/06 02/02→06/06 05/99→06/06	→	+PR 1KP / 1KT		**24.0109-0123.1**	**409123**	Ø 230 Brake Disc Thickness [mm] 9 Minimum thickness [mm] 7 + S
1.9 TDI	96	11/00→06/06	→	04/01→; +PR 1KP / 1KT		**24.0109-0123.1**	**409123**	Ø 230 Brake Disc Thickness [mm] 9 Minimum thickness [mm] 7 + S
VW - GOLF V (1K1) 10/03→07/10								
Guide Bolt, brake caliper								
1.4 16V 1.4 FSI 1.6 FSI	55 66 85	10/03→05/06 10/03→07/06 10/03→07/08		+PR 1ZE / 1ZP	2	**11.8171-0008.1**	**990049**	ATE
				+PR 1LJ / 1ZD	2	**11.8171-0008.1**	**990049**	ATE
				+PR 1LL / 1LV	2	**11.8171-0008.1**	**990049**	ATE
				+PR 1LK / 1LM	2	**11.8171-0008.1**	**990049**	ATE
1.4 16V 1.4 TSI 1.6 1.6 MultiFuel 1.9 TDI 1.9 TDI 4motion 2.0 2.0 FSI 2.0 FSI 4motion 2.0 GTI 2.0 SDI 2.0 TDI 2.0 TDI 16V 2.0 TDI 16V 4motion 2.0 TDI 4motion 2.5 3.2 R32 4motion	59 90 - 125 75 75 66 - 77 77 85 110 110 147 - 169 55 100 - 125 103 103 103 125 184	05/06→11/08 11/05→11/08 01/04→11/08 10/07→11/08 10/03→11/08 08/04→11/08 01/05→11/08 01/04→11/08 08/04→11/08 10/04→02/09 01/04→11/08 10/03→11/08 10/03→11/08 08/04→11/08 01/07→11/08 05/07→11/08 11/05→11/08		+PR 1ZE / 1ZP; → 09/08	2	**11.8171-0008.1**	**990049**	ATE
				+PR 1LJ / 1ZD; → 09/08	2	**11.8171-0008.1**	**990049**	ATE
				+PR 1LL / 1LV; → 09/08	2	**11.8171-0008.1**	**990049**	ATE
				+PR 1LK / 1LM; → 09/08	2	**11.8171-0008.1**	**990049**	ATE
Brake Disc								
1.4 16V 1.4 FSI 1.6 FSI	55 66 85	10/03→05/06 10/03→07/06 10/03→07/08	←	+PR 1ZE / 1ZP		**24.0125-0145.1**	**425145**	Ø 288 Brake Disc Thickness [mm] 25 Minimum thickness [mm] 22 Vented + S
			←	+PR 1LJ / 1LL / 1LV / 1ZD		**24.0125-0158.1** **24.0325-0158.1**	**425158** **525158**	Ø 312 Brake Disc Thickness [mm] 25 Minimum thickness [mm] 22 Vented + S Ø 312 Brake Disc Thickness [mm] 25 Minimum thickness [mm] 22 Vented + S
1.4 16V 1.4 TSI 1.6 1.9 TDI 2.0 FSI 2.0 GTI 2.0 SDI 2.0 TDI 2.0 TDI 16V 2.5	59 90 - 125 75 66 - 77 110 147 - 169 55 100 - 125 103 125	05/06→11/08 11/05→11/08 01/04→11/08 10/03→11/08 01/04→11/08 10/04→02/09 01/04→11/08 10/03→11/08 10/03→11/08 05/07→11/08	←	+PR 1ZE / 1ZP; → 09/08		**24.0125-0145.1**	**425145**	Ø 288 Brake Disc Thickness [mm] 25 Minimum thickness [mm] 22 Vented + S
			←	+PR 1LJ / 1LL / 1LV / 1ZD; → 09/08		**24.0125-0158.1** **24.0325-0158.1**	**425158** **525158**	Ø 312 Brake Disc Thickness [mm] 25 Minimum thickness [mm] 22 Vented + S Ø 312 Brake Disc Thickness [mm] 25 Minimum thickness [mm] 22 Vented + S
1.6 MultiFuel 2.0	75 85	10/07→11/08 01/05→11/08	←	+PR 1ZE / 1ZP; → 09/08		**24.0125-0145.1**	**425145**	Ø 288 Brake Disc Thickness [mm] 25 Minimum thickness [mm] 22 Vented + S

	kW				! #			
VW - GOLF V (1K1) 10/03→07/10								
Brake Disc								
1.6 MultiFuel 2.0	75 85	10/07→11/08 01/05→11/08		+PR 1LJ / 1LL / 1LV / 1ZD; → 09/08		**24.0125-0158.1**	**425158**	Ø 312 Brake Disc Thickness [mm] 25 Minimum thickness [mm] 22 Vented + S
1.9 TDI 4motion 2.0 FSI 4motion 2.0 TDI 16V 4motion 2.0 TDI 4motion 3.2 R32 4motion	77 110 103 103 184	08/04→11/08 08/04→11/08 08/04→11/08 01/07→11/08 11/05→11/08		+PR 1ZE / 1ZP; → 09/08		**24.0125-0145.1**	**425145**	Ø 288 Brake Disc Thickness [mm] 25 Minimum thickness [mm] 22 Vented + S
				+PR 1LJ / 1LL / 1LV / 1ZD; → 09/08		**24.0125-0158.1** **24.0325-0158.1**	**425158** **525158**	Ø 312 Brake Disc Thickness [mm] 25 Minimum thickness [mm] 22 Vented + S Ø 312 Brake Disc Thickness [mm] 25 Minimum thickness [mm] 22 Vented + S
				+PR 2EL; → 09/08		**24.0122-0219.1**	**422219**	Ø 310 Brake Disc Thickness [mm] 22 Minimum thickness [mm] 20 Vented
Slave Cylinder, clutch								
1.4 16V 1.4 FSI 1.6 FSI	55 66 85	10/03→05/06 10/03→07/06 10/03→07/08				**24.2519-1706.3**	**040096**	Ø 19
1.4 16V 1.4 TSI 1.6 1.6 MultiFuel 1.9 TDI 2.0 2.0 GTI 2.0 SDI 2.0 TDI 2.0 TDI 16V 2.5	59 90 75 75 66 85 147 - 169 55 100 - 125 103 125	05/06→11/08 05/07→11/08 01/04→11/08 10/07→11/08 05/04→11/08 01/05→11/08 10/04→02/09 01/04→11/08 10/03→11/08 10/03→11/08 05/07→11/08		→ 09/08		**24.2519-1706.3**	**040096**	Ø 19
VW - GOLF V Variant (1K5) 01/07→07/09								
Guide Bolt, brake caliper								
1.4	59	06/07→07/09		→ 06/09; +PR 1ZE / 1ZP	2	**11.8171-0008.1**	**990049**	ATE
1.4 TSI 1.6 1.6 MultiFuel 1.9 TDI 1.9 TDI 4motion 2.0 TDI 2.0 TDI 16V 2.0 TFSI	90 - 125 75 75 77 77 96 - 103 103 147	06/07→07/09 06/07→07/09 11/07→07/09 06/07→07/09 01/08→07/09 06/07→07/09 06/07→07/09 06/07→07/09		→ 06/09; +PR 1LJ / 1ZD	2	**11.8171-0008.1**	**990049**	ATE
Brake Disc								
1.4 1.4 TSI 1.6 1.6 MultiFuel 1.9 TDI 1.9 TDI 4motion 2.0 TDI 2.0 TDI 16V 2.0 TFSI	59 90 - 125 75 75 77 77 96 - 103 103 147	06/07→07/09 06/07→07/09 06/07→07/09 11/07→07/09 06/07→07/09 01/08→07/09 06/07→07/09 06/07→07/09 06/07→07/09		→ 06/09; +PR 1ZE / 1ZP		**24.0125-0145.1**	**425145**	Ø 288 Brake Disc Thickness [mm] 25 Minimum thickness [mm] 22 Vented + S
				→ 06/09; +PR 1LJ / 1ZD		**24.0125-0158.1** **24.0325-0158.1**	**425158** **525158**	Ø 312 Brake Disc Thickness [mm] 25 Minimum thickness [mm] 22 Vented + S Ø 312 Brake Disc Thickness [mm] 25 Minimum thickness [mm] 22 Vented + S
Slave Cylinder, clutch								
1.4 1.4 TSI 1.6 1.6 MultiFuel 1.9 TDI 1.9 TDI 4motion 2.0 TDI 2.0 TDI 16V 2.0 TFSI	59 90 - 125 75 75 77 77 96 - 103 103 147	06/07→07/09 06/07→07/09 06/07→07/09 11/07→07/09 06/07→07/09 01/08→07/09 06/07→07/09 06/07→07/09 06/07→07/09		→ 06/09		**24.2519-1706.3**	**040096**	Ø 19

© 2022 Continental Aftermarket & Services GmbH

	kW				! #			
VW - GOLF VI (5K1) 10/08→12/14								
Brake Caliper								
Blue E-Motion	65	12/10→11/13	➡	+PR 1KE / 1KR; + eFSB; ◪		**24.6238-7023.5**	**241241**	ATE without holder + eFSB
						24.6238-7047.5	**241181**	ATE without holder + eFSB
			➡	+PR 1KE / 1KR; + eFSB; ◪		**24.6238-7024.5**	**241242**	ATE without holder + eFSB
						24.6238-7048.5	**241182**	ATE without holder + eFSB
Guide Bolt, brake caliper								
1.2 TSI	63	05/10→11/12		+PR 1ZE / 1ZP	2	**11.8171-0008.1**	**990049**	ATE
1.4	59	10/08→11/12		+PR 1LJ / 1LL / 1LV / 1ZA / 1ZB / 1ZD	2	**11.8171-0008.1**	**990049**	ATE
1.4 TSI	90 - 118	10/08→11/12		+PR 1LM	2	**11.8171-0008.1**	**990049**	ATE
1.6	75	10/08→11/12		+PR 1ZK	2	**11.8171-0008.1**	**990049**	ATE
1.6 BiFuel	75	03/09→11/12						
1.6 MultiFuel	75	10/08→11/12						
1.6 TDI	66 - 77	02/09→11/12						
1.8 TSI	118	06/09→01/11						
2.0 GTi	147 - 173	04/09→11/13						
2.0 R 4motion	188 - 199	11/09→11/13						
2.0 TDI	81 - 125	10/08→05/13						
2.0 TDI 4motion	103	05/09→11/12						
2.0 TFSI 4motion	191	09/11→11/13						
2.5	125	07/09→05/13						
1.2 TSI	77	11/08→11/12		05/09→; +PR 1ZE / 1ZP	2	**11.8171-0008.1**	**990049**	ATE
				05/09→; +PR 1LJ / 1LL / 1LV / 1ZA / 1ZB / 1ZD	2	**11.8171-0008.1**	**990049**	ATE
				05/09→; +PR 1LM	2	**11.8171-0008.1**	**990049**	ATE
				05/09→; +PR 1ZK	2	**11.8171-0008.1**	**990049**	ATE
Brake Disc								
1.2 TSI	63	05/10→11/12	⬅	+PR 1ZE / 1ZP		**24.0125-0145.1**	**425145**	Ø 288 Brake Disc Thickness [mm] 25 Minimum thickness [mm] 22 Vented + S
1.4	59	10/08→11/12						
1.4 TSI	90 - 118	10/08→11/12						
1.6	75	10/08→11/12	⬅	+PR 1LJ / 1LL / 1LV / 1ZA / 1ZB / 1ZD		**24.0125-0158.1**	**425158**	Ø 312 Brake Disc Thickness [mm] 25 Minimum thickness [mm] 22 Vented + S
1.6 BiFuel	75	03/09→11/12						
1.6 MultiFuel	75	10/08→11/12						
1.6 TDI	66 - 77	02/09→11/12						
1.8 TSI	118	06/09→01/11				**24.0325-0158.1**	**525158**	Ø 312 Brake Disc Thickness [mm] 25 Minimum thickness [mm] 22 Vented + S
2.0 GTi	155 - 173	04/09→11/12						
2.0 TDI	81 - 125	10/08→05/13						
			➡	+PR 1KS / 1KT		**24.0110-0356.1**	**410356**	Ø 272 Brake Disc Thickness [mm] 9.7 Minimum thickness [mm] 8 + S
1.2 TSI	77	11/08→11/12	⬅	05/09→; +PR 1ZE / 1ZP		**24.0125-0145.1**	**425145**	Ø 288 Brake Disc Thickness [mm] 25 Minimum thickness [mm] 22 Vented + S
			⬅	05/09→; +PR 1LJ / 1LL / 1LV / 1ZA / 1ZB / 1ZD		**24.0125-0158.1**	**425158**	Ø 312 Brake Disc Thickness [mm] 25 Minimum thickness [mm] 22 Vented + S
						24.0325-0158.1	**525158**	Ø 312 Brake Disc Thickness [mm] 25 Minimum thickness [mm] 22 Vented + S
			➡	05/09→; +PR 1KS / 1KT		**24.0110-0356.1**	**410356**	Ø 272 Brake Disc Thickness [mm] 9.7 Minimum thickness [mm] 8 + S
2.0 GTi	147	06/09→11/13	⬅	+PR 1ZE / 1ZP		**24.0125-0145.1**	**425145**	Ø 288 Brake Disc Thickness [mm] 25 Minimum thickness [mm] 22 Vented + S
2.5	125	07/09→05/13						
			⬅	+PR 1LJ / 1LL / 1LV / 1ZA / 1ZB / 1ZD		**24.0125-0158.1**	**425158**	Ø 312 Brake Disc Thickness [mm] 25 Minimum thickness [mm] 22 Vented + S
			➡	+PR 1KS / 1KT		**24.0110-0356.1**	**410356**	Ø 272 Brake Disc Thickness [mm] 9.7 Minimum thickness [mm] 8 + S

© 2022 Continental Aftermarket & Services GmbH

	kW				! #			
VW - GOLF VI (5K1) 10/08→12/14								
Brake Disc								
2.0 R 4motion 2.0 TDI 4motion 2.0 TFSI 4motion	188 - 199 103 191	11/09→11/13 05/09→11/12 09/11→11/13	←	+PR 1ZE / 1ZP		**24.0125-0145.1**	**425145**	Ø 288 Brake Disc Thickness [mm] 25 Minimum thickness [mm] 22 Vented + S
			←	+PR 1LJ / 1LL / 1LV / 1ZA / 1ZB / 1ZD		**24.0125-0158.1** **24.0325-0158.1**	**425158** **525158**	Ø 312 Brake Disc Thickness [mm] 25 Minimum thickness [mm] 22 Vented + S Ø 312 Brake Disc Thickness [mm] 25 Minimum thickness [mm] 22 Vented + S
			→	+PR 1KS / 1KT		**24.0110-0356.1**	**410356**	Ø 272 Brake Disc Thickness [mm] 9.7 Minimum thickness [mm] 8 + S
			→	+PR 1KW / 2EL		**24.0122-0219.1**	**422219**	Ø 310 Brake Disc Thickness [mm] 22 Minimum thickness [mm] 20 Vented
2.0 R 4motion	195	11/09→05/11	←	+PR 1ZE / 1ZP		**24.0125-0145.1**	**425145**	Ø 288 Brake Disc Thickness [mm] 25 Minimum thickness [mm] 22 Vented + S
			←	+PR 1LJ / 1LL / 1LV / 1ZA / 1ZB / 1ZD		**24.0125-0158.1**	**425158**	Ø 312 Brake Disc Thickness [mm] 25 Minimum thickness [mm] 22 Vented + S
			→	+PR 1KS / 1KT		**24.0110-0356.1**	**410356**	Ø 272 Brake Disc Thickness [mm] 9.7 Minimum thickness [mm] 8 + S
			→	+PR 1KW / 2EL		**24.0122-0219.1**	**422219**	Ø 310 Brake Disc Thickness [mm] 22 Minimum thickness [mm] 20 Vented
Slave Cylinder, clutch								
1.2 TSI 1.4 1.4 TSI 1.6 1.6 BiFuel 1.6 MultiFuel 1.6 TDI 1.8 TSI 2.0 GTi 2.0 R 4motion 2.0 TDI 2.0 TDI 4motion 2.0 TFSI 4motion 2.5	63 59 90 - 118 75 75 75 66 - 77 118 147 - 173 188 - 199 81 - 125 103 191 125	05/10→11/12 10/08→11/12 10/08→11/12 10/08→11/12 03/09→11/12 10/08→11/12 02/09→11/12 06/09→01/11 04/09→11/13 11/09→11/13 10/08→05/13 05/09→11/12 09/11→11/13 07/09→05/13		+PR 0EM		**24.2519-1706.3**	**040096**	Ø 19
1.2 TSI	77	11/08→11/12		05/09→; +PR 0EM		**24.2519-1706.3**	**040096**	Ø 19
VW - GOLF VI Convertible (517) 03/11→05/16								
Guide Bolt, brake caliper								
1.2 TSI 1.4 TSI 1.6 TDI	77 118 77	03/11→05/16 03/11→05/16 03/11→05/16		06/11→; +PR 1ZE / 1ZP	2	**11.8171-0008.1**	**990049**	ATE
				06/11→; +PR 1ZA / 1ZD / 1ZB	2	**11.8171-0008.1**	**990049**	ATE
				06/11→; +PR 1ZK	2	**11.8171-0008.1**	**990049**	ATE
1.2 TSI 16V 1.4 TSI 2.0 GTI 2.0 R 2.0 TDI 2.0 TSI	77 90 - 110 155 195 81 - 110 162	11/13→05/16 11/11→05/16 05/12→05/16 01/13→05/16 11/11→05/16 11/13→05/16		+PR 1ZE / 1ZP	2	**11.8171-0008.1**	**990049**	ATE
				+PR 1ZA / 1ZD / 1ZB	2	**11.8171-0008.1**	**990049**	ATE
				+PR 1ZK	2	**11.8171-0008.1**	**990049**	ATE
Brake Disc								
1.2 TSI 1.4 TSI 1.6 TDI	77 118 77	03/11→05/16 03/11→05/16 03/11→05/16	←	06/11→; +PR 1ZE / 1ZP		**24.0125-0145.1**	**425145**	Ø 288 Brake Disc Thickness [mm] 25 Minimum thickness [mm] 22 Vented + S

© 2022 Continental Aftermarket & Services GmbH

	kW				! #			
VW - GOLF VI Convertible (517) 03/11→05/16								
Brake Disc								
1.2 TSI 1.4 TSI 1.6 TDI	77 118 77	03/11→05/16 03/11→05/16 03/11→05/16	←	06/11→; +PR 1ZA / 1ZD / 1ZB		**24.0125-0158.1** **24.0325-0158.1**	**425158** **525158**	Ø 312 Brake Disc Thickness [mm] 25 Minimum thickness [mm] 22 Vented + S Ø 312 Brake Disc Thickness [mm] 25 Minimum thickness [mm] 22 Vented + S
			→	06/11→; +PR 1KS / 1KT		**24.0110-0356.1**	**410356**	Ø 272 Brake Disc Thickness [mm] 9.7 Minimum thickness [mm] 8 + S
			→	06/11→; +PR 1KW		**24.0122-0219.1**	**422219**	Ø 310 Brake Disc Thickness [mm] 22 Minimum thickness [mm] 20 Vented
1.2 TSI 16V 1.4 TSI 2.0 GTI 2.0 R 2.0 TDI 2.0 TSI	77 90 - 110 155 195 81 - 110 162	11/13→05/16 11/11→05/16 05/12→05/16 01/13→05/16 11/11→05/16 11/13→05/16	←	+PR 1ZE / 1ZP		**24.0125-0145.1**	**425145**	Ø 288 Brake Disc Thickness [mm] 25 Minimum thickness [mm] 22 Vented + S
			←	+PR 1ZA / 1ZD / 1ZB		**24.0125-0158.1** **24.0325-0158.1**	**425158** **525158**	Ø 312 Brake Disc Thickness [mm] 25 Minimum thickness [mm] 22 Vented + S Ø 312 Brake Disc Thickness [mm] 25 Minimum thickness [mm] 22 Vented + S
			→	+PR 1KS / 1KT		**24.0110-0356.1**	**410356**	Ø 272 Brake Disc Thickness [mm] 9.7 Minimum thickness [mm] 8 + S
			→	+PR 1KW		**24.0122-0219.1**	**422219**	Ø 310 Brake Disc Thickness [mm] 22 Minimum thickness [mm] 20 Vented
Slave Cylinder, clutch								
1.2 TSI 1.4 TSI 1.6 TDI	77 118 77	03/11→05/16 03/11→05/16 03/11→05/16		06/11→; +PR 0EM		**24.2519-1706.3**	**040096**	Ø 19
1.2 TSI 16V 1.4 TSI 2.0 GTI 2.0 R 2.0 TDI 2.0 TSI	77 90 - 110 155 195 81 - 110 162	11/13→05/16 11/11→05/16 05/12→05/16 01/13→05/16 11/11→05/16 11/13→05/16		+PR 0EM		**24.2519-1706.3**	**040096**	Ø 19
VW - GOLF VI Van (5K1_) 10/08→11/12								
Guide Bolt, brake caliper								
1.2 TSi 1.2 TSi BlueMotion 1.4 TSi 1.6 TDi 1.6 TDi BlueMotion 2.0 GTi 2.0 TDi 2.0 TSi R 4motion TSi	63 77 118 66 77 155 103 - 125 199 90	05/10→11/12 05/09→11/12 10/08→11/12 02/09→11/12 05/09→11/12 02/09→11/12 09/09→11/12 11/09→11/12 10/08→11/12		+PR 1ZE / 1ZP	2	**11.8171-0008.1**	**990049**	ATE
				+PR 1LJ / 1LL / 1LV / 1ZA / 1ZB / 1ZD	2	**11.8171-0008.1**	**990049**	ATE
				+PR 1LM	2	**11.8171-0008.1**	**990049**	ATE
				+PR 1ZK	2	**11.8171-0008.1**	**990049**	ATE
Brake Disc								
1.2 TSi 1.2 TSi BlueMotion 1.4 TSi 1.6 TDi 1.6 TDi BlueMotion 2.0 GTi 2.0 TDi TSi	63 77 118 66 77 155 103 - 125 90	05/10→11/12 05/09→11/12 10/08→11/12 02/09→11/12 05/09→11/12 02/09→11/12 09/09→11/12 10/08→11/12	←	+PR 1ZE / 1ZP		**24.0125-0145.1**	**425145**	Ø 288 Brake Disc Thickness [mm] 25 Minimum thickness [mm] 22 Vented + S
			←	+PR 1LJ / 1LL / 1LV / 1ZA / 1ZB / 1ZD		**24.0125-0158.1**	**425158**	Ø 312 Brake Disc Thickness [mm] 25 Minimum thickness [mm] 22 Vented + S
			→	+PR 1KS / 1KT		**24.0110-0356.1**	**410356**	Ø 272 Brake Disc Thickness [mm] 9.7 Minimum thickness [mm] 8 + S
2.0 TSi R 4motion	199	11/09→11/12	←	+PR 1ZE / 1ZP		**24.0125-0145.1**	**425145**	Ø 288 Brake Disc Thickness [mm] 25 Minimum thickness [mm] 22 Vented + S

	kW				! #			
VW - GOLF VI Van (5K1_) 10/08→11/12								
Brake Disc								
2.0 TSi R 4motion	199	11/09→11/12	←	+PR 1LJ / 1LL / 1LV / 1ZA / 1ZB / 1ZD		**24.0125-0158.1**	**425158**	Ø 312 Brake Disc Thickness [mm] 25 Minimum thickness [mm] 22 Vented + S
			→	+PR 1KS / 1KT		**24.0110-0356.1**	**410356**	Ø 272 Brake Disc Thickness [mm] 9.7 Minimum thickness [mm] 8 + S
			→	+PR 1KW / 2EL		**24.0122-0219.1**	**422219**	Ø 310 Brake Disc Thickness [mm] 22 Minimum thickness [mm] 20 Vented
Slave Cylinder, clutch								
1.2 TSi	63	05/10→11/12		+PR 0EM		**24.2519-1706.3**	**040096**	Ø 19
1.2 TSi BlueMotion	77	05/09→11/12						
1.4 TSi	118	10/08→11/12						
1.6 TDi	66	02/09→11/12						
1.6 TDi BlueMotion	77	05/09→11/12						
2.0 GTi	155	02/09→11/12						
2.0 TDi	103 - 125	09/09→11/12						
2.0 TSi R 4motion	199	11/09→11/12						
TSi	90	10/08→11/12						
VW - GOLF VI Variant (AJ5) 07/09→07/14								
Guide Bolt, brake caliper								
1.2 TSI	63 - 77	07/09→07/13		+PR 1LJ / 1ZA / 1ZD / 1ZE / 1ZP	2	**11.8171-0008.1**	**990049**	ATE
1.4	59	07/09→07/13						
1.4 TSI	90 - 118	07/09→07/13						
1.6	75	07/09→07/13						
1.6 BiFuel	75	07/09→12/10						
1.6 MultiFuel	75	07/10→07/13						
1.6 TDI	66 - 77	07/09→07/13						
1.6 TDI 4motion	77	07/09→07/13						
2.0 TDI	81 - 103	07/09→07/13						
2.0 TFSI	147	07/09→07/13						
Brake Disc								
1.2 TSI	63 - 77	07/09→07/13	←	+PR 1ZE / 1ZP		**24.0125-0145.1**	**425145**	Ø 288 Brake Disc Thickness [mm] 25 Minimum thickness [mm] 22 Vented + S
1.4	59	07/09→07/13						
1.4 TSI	90 - 118	07/09→07/13						
1.6	75	07/09→07/13	←	+PR 1LJ / 1ZA / 1ZD		**24.0125-0158.1**	**425158**	Ø 312 Brake Disc Thickness [mm] 25 Minimum thickness [mm] 22 Vented + S
1.6 MultiFuel	75	07/10→07/13						
1.6 TDI	66 - 77	07/09→07/13						
1.6 TDI 4motion	77	07/09→07/13				**24.0325-0158.1**	**525158**	Ø 312 Brake Disc Thickness [mm] 25 Minimum thickness [mm] 22 Vented + S
2.0 TDI	103	07/09→07/13						
			→	+PR 1KS		**24.0110-0356.1**	**410356**	Ø 272 Brake Disc Thickness [mm] 9.7 Minimum thickness [mm] 8 + S
1.6 BiFuel	75	07/09→12/10	←	+PR 1ZE / 1ZP		**24.0125-0145.1**	**425145**	Ø 288 Brake Disc Thickness [mm] 25 Minimum thickness [mm] 22 Vented + S
2.0 TDI	81 - 100	07/09→07/13						
2.0 TFSI	147	07/09→07/13						
			←	+PR 1LJ / 1ZA / 1ZD		**24.0125-0158.1**	**425158**	Ø 312 Brake Disc Thickness [mm] 25 Minimum thickness [mm] 22 Vented + S
			→	+PR 1KS		**24.0110-0356.1**	**410356**	Ø 272 Brake Disc Thickness [mm] 9.7 Minimum thickness [mm] 8 + S
Brake Hose								
1.2 TSI	63 - 77	07/09→07/13	←	12/11→	2	**24.5143-0584.3**	**331540**	L= 584
1.4	59	07/09→07/13						
1.4 TSI	90 - 118	07/09→07/13						
1.6	75	07/09→07/13						
1.6 MultiFuel	75	07/10→07/13						

© 2022 Continental Aftermarket & Services GmbH

	kW				! #			
VW - GOLF VI Variant (AJ5) 07/09→07/14								
Brake Hose								
1.6 TDI	66 - 77	07/09→07/13	←	12/11→	2	**24.5143-0584.3**	**331540**	L= 584
1.6 TDI 4motion	77	07/09→07/13						
2.0 TDI	81 - 103	07/09→07/13						
2.0 TFSI	147	07/09→07/13						
1.6 BiFuel	75	07/09→12/10	←		2	**24.5143-0584.3**	**331540**	L= 584
Slave Cylinder, clutch								
1.2 TSI	63 - 77	07/09→07/13		+PR 0EM		**24.2519-1706.3**	**040096**	Ø 19
1.4	59	07/09→07/13						
1.4 TSI	90 - 118	07/09→07/13						
1.6	75	07/09→07/13						
1.6 BiFuel	75	07/09→12/10						
1.6 MultiFuel	75	07/10→07/13						
1.6 TDI	66 - 77	07/09→07/13						
1.6 TDI 4motion	77	07/09→07/13						
2.0 TDI	81 - 103	07/09→07/13						
2.0 TFSI	147	07/09→07/13						
VW - GOLF VII (5G1, BQ1, BE1, BE2) 08/12→								
Brake Master Cylinder								
1.0 TSI	63 - 85	05/15→		for left-hand drive vehicles; +PR 1ZA / 1ZD / 1ZE / 1ZF / 1ZP		**24.4123-1719.3**	**011017**	TRW Ø 23.8 without brake fluid reservoir
1.2 TSI	77 - 81	11/12→						
1.4 TSI	92 - 110	05/14→						
1.4 TSI MultiFuel	90 - 92	04/13→						
1.5 TGI	96	11/18→						
1.5 TSI	96 - 110	04/17→						
1.6	81	05/14→07/17						
1.6 TDI	66 - 85	04/13→						
1.6 TDI 4motion	77 - 81	11/12→						
2.0 GTD	135	04/13→						
2.0 GTI	155 - 180	04/13→						
2.0 GTI Clubsport	195	02/16→03/17						
2.0 GTI Clubsport S	228	09/16→						
2.0 GTI TCR	213	11/18→						
2.0 R 360S 4motion	265	09/16→						
2.0 R 4motion	206 - 228	11/13→						
2.0 TDI	81 - 110	08/12→						
2.0 TDI 4motion	110	11/12→08/20						
1.2 TSI 1.4 TSI 1.6 TDI	63 103 77	08/12→03/17 08/12→03/17 08/12→03/17		11/12→; for left-hand drive vehicles; +PR 1ZA / 1ZD / 1ZE / 1ZF / 1ZP		**24.4123-1719.3**	**011017**	TRW Ø 23.8 without brake fluid reservoir
1.4 TGI CNG	81	06/13→		08/13→; for left-hand drive vehicles; +PR 1ZA / 1ZD / 1ZE / 1ZF / 1ZP		**24.4123-1719.3**	**011017**	TRW Ø 23.8 without brake fluid reservoir
1.4 TSI 1.6 TDI	90 81	11/12→ 01/13→		06/13→; for left-hand drive vehicles; +PR 1ZA / 1ZD / 1ZE / 1ZF / 1ZP		**24.4123-1719.3**	**011017**	TRW Ø 23.8 without brake fluid reservoir
Brake Caliper								
1.0 TSI	63 - 85	05/15→	←	+PR 1ZA / 1ZD;		**24.3571-1801.5**	**241387**	without holder
1.2 TSI	77 - 81	11/12→	←	+PR 1ZA / 1ZD;		**24.3571-1802.5**	**241388**	without holder
1.4 GTE Hybrid	110	05/14→	→	+PR 1KK; + eFSB;		**24.6238-7023.5** **24.6238-7047.5**	**241241** **241181**	ATE without holder + eFSB ATE without holder + eFSB
1.4 TSI	92 - 110	05/14→	→	+PR 1KE; + eFSB;		**24.6238-7023.5** **24.6238-7047.5**	**241241** **241181**	ATE without holder + eFSB ATE without holder + eFSB
1.4 TSI MultiFuel	90 - 92	04/13→						
1.5 TGI	96	11/18→	→	+PR 1KE; + eFSB;		**24.6238-7024.5** **24.6238-7048.5**	**241242** **241182**	ATE without holder + eFSB ATE without holder + eFSB
1.5 TSI	96 - 110	04/17→						
1.6	81	05/14→07/17	→	+PR 1KK; + eFSB;		**24.6238-7024.5** **24.6238-7048.5**	**241242** **241182**	ATE without holder + eFSB ATE without holder + eFSB
1.6 TDI	66 - 85	04/13→						
1.6 TDI 4motion	77 - 81	11/12→	→	+PR 1KJ; + eFSB;		**24.6242-7017.5**	**241185**	ATE without holder + eFSB
2.0 GTD	135	04/13→	→	+PR 1KJ; + eFSB;		**24.6242-7018.5**	**241186**	ATE without holder + eFSB

VW - GOLF VII (5G1, BQ1, BE1, BE2) 08/12→

Brake Caliper

	kW				! #			
2.0 GTI	155 - 180	04/13→	←	+PR 1ZA / 1ZD;		24.3571-1801.5	241387	without holder
2.0 GTI Clubsport	195	02/16→03/17	←	+PR 1ZA / 1ZD;		24.3571-1802.5	241388	without holder
2.0 GTI Clubsport S	228	09/16→	→	+PR 1KK; + eFSB;		24.6238-7023.5	241241	ATE without holder + eFSB
2.0 GTI TCR	213	11/18→				24.6238-7047.5	241181	ATE without holder + eFSB
2.0 R 360S 4motion	265	09/16→						
2.0 R 4motion	206 - 228	11/13→	→	+PR 1KE; + eFSB;		24.6238-7023.5	241241	ATE without holder + eFSB
						24.6238-7047.5	241181	ATE without holder + eFSB
2.0 TDI	81 - 110	08/12→	→	+PR 1KE; + eFSB;		24.6238-7024.5	241242	ATE without holder + eFSB
2.0 TDI 4motion	110	11/12→08/20				24.6238-7048.5	241182	ATE without holder + eFSB
			→	+PR 1KK; + eFSB;		24.6238-7024.5	241242	ATE without holder + eFSB
						24.6238-7048.5	241182	ATE without holder + eFSB
			→	+PR 1KJ; + eFSB;		24.6242-7017.5	241185	ATE without holder + eFSB
			→	+PR 1KJ; + eFSB;		24.6242-7018.5	241186	ATE without holder + eFSB
1.2 TSI	63	08/12→03/17	←	11/12→; +PR 1ZA / 1ZD;		24.3571-1801.5	241387	without holder
1.4 TSI	103	08/12→03/17	←	11/12→; +PR 1ZA / 1ZD;		24.3571-1802.5	241388	without holder
1.6 TDI	77	08/12→03/17	→	11/12→; +PR 1KK; + eFSB;		24.6238-7023.5	241241	ATE without holder + eFSB
						24.6238-7047.5	241181	ATE without holder + eFSB
			→	11/12→; +PR 1KE; + eFSB;		24.6238-7023.5	241241	ATE without holder + eFSB
						24.6238-7047.5	241181	ATE without holder + eFSB
			→	11/12→; +PR 1KK; + eFSB;		24.6238-7024.5	241242	ATE without holder + eFSB
						24.6238-7048.5	241182	ATE without holder + eFSB
			→	11/12→; +PR 1KE; + eFSB;		24.6238-7024.5	241242	ATE without holder + eFSB
						24.6238-7048.5	241182	ATE without holder + eFSB
			→	11/12→; +PR 1KJ; + eFSB;		24.6242-7017.5	241185	ATE without holder + eFSB
			→	11/12→; +PR 1KJ; + eFSB;		24.6242-7018.5	241186	ATE without holder + eFSB
1.4 TGI CNG	81	06/13→	←	08/13→; +PR 1ZA / 1ZD;		24.3571-1801.5	241387	without holder
			←	08/13→; +PR 1ZA / 1ZD;		24.3571-1802.5	241388	without holder
			→	08/13→; +PR 1KK; + eFSB;		24.6238-7023.5	241241	ATE without holder + eFSB
						24.6238-7047.5	241181	ATE without holder + eFSB
			→	08/13→; +PR 1KE; + eFSB;		24.6238-7023.5	241241	ATE without holder + eFSB
						24.6238-7047.5	241181	ATE without holder + eFSB
			→	08/13→; +PR 1KK; + eFSB;		24.6238-7024.5	241242	ATE without holder + eFSB
						24.6238-7048.5	241182	ATE without holder + eFSB
			→	08/13→; +PR 1KE; + eFSB;		24.6238-7024.5	241242	ATE without holder + eFSB
						24.6238-7048.5	241182	ATE without holder + eFSB
			→	08/13→; +PR 1KJ; + eFSB;		24.6242-7017.5	241185	ATE without holder + eFSB
			→	08/13→; +PR 1KJ; + eFSB;		24.6242-7018.5	241186	ATE without holder + eFSB
1.4 TSI	90	11/12→	←	06/13→; +PR 1ZA / 1ZD;		24.3571-1801.5	241387	without holder
1.6 TDI	81	01/13→	←	06/13→; +PR 1ZA / 1ZD;		24.3571-1802.5	241388	without holder
			→	06/13→; +PR 1KK; + eFSB;		24.6238-7023.5	241241	ATE without holder + eFSB
						24.6238-7047.5	241181	ATE without holder + eFSB
			→	06/13→; +PR 1KE; + eFSB;		24.6238-7023.5	241241	ATE without holder + eFSB
						24.6238-7047.5	241181	ATE without holder + eFSB
			→	06/13→; +PR 1KK; + eFSB;		24.6238-7024.5	241242	ATE without holder + eFSB
						24.6238-7048.5	241182	ATE without holder + eFSB
			→	06/13→; +PR 1KE; + eFSB;		24.6238-7024.5	241242	ATE without holder + eFSB
						24.6238-7048.5	241182	ATE without holder + eFSB
			→	06/13→; +PR 1KJ; + eFSB;		24.6242-7017.5	241185	ATE without holder + eFSB
			→	06/13→; +PR 1KJ; + eFSB;		24.6242-7018.5	241186	ATE without holder + eFSB
e-Golf	85	03/14→02/17	→	08/14→; +PR 1KE / 1KR; + eFSB;		24.6238-7023.5	241241	ATE without holder + eFSB
						24.6238-7047.5	241181	ATE without holder + eFSB
			→	08/14→; +PR 1KE / 1KR; + eFSB;		24.6238-7024.5	241242	ATE without holder + eFSB
						24.6238-7048.5	241182	ATE without holder + eFSB
e-Golf	100	12/16→	→	+PR 1KE / 1KR; + eFSB;		24.6238-7023.5	241241	ATE without holder + eFSB
						24.6238-7047.5	241181	ATE without holder + eFSB
			→	+PR 1KE / 1KR; + eFSB;		24.6238-7024.5	241242	ATE without holder + eFSB
						24.6238-7048.5	241182	ATE without holder + eFSB

Brake Pad Set, disc brake

1.0 TSI	63 - 85	05/15→	←	+PR 1LJ / 1LM		13.0460-2617.2	602617	TRW + WK

© 2022 Continental Aftermarket & Services GmbH

VW - GOLF VII (5G1, BQ1, BE1, BE2) 08/12→

Brake Pad Set, disc brake

	kW				! #			
1.2 TSI	77 - 81	11/12→	←	+PR 1LJ / 1LM		13.0470-2617.2	LD2617	TRW + WK Ceramic
1.4 GTE Hybrid	110	05/14→	←	+PR 1ZA / 1ZB / 1ZD / 1ZE / 1ZP / 1LV / 1ZC / 1ZG		13.0460-2785.2	602785	TRW 25683 20,4 + WE / + WK
1.4 TSI	92 - 110	05/14→				13.0470-2785.2	LD2785	TRW 25683 20,4 + WE / + WK Ceramic
1.4 TSI MultiFuel	90 - 92	04/13→	→	+PR 1KE / 1KK; + eFSB		13.0460-7293.2	607293	ATE 25008 16,3 - WE / - WK
1.5 TGI	96	11/18→				13.0470-7293.2	LD7293	ATE 25008 16,3 - WE / - WK Ceramic
1.5 TSI	96 - 110	04/17→	→	+PR 1KJ / 1KV / 1KY; + eFSB		13.0460-7294.2	607294	ATE 25009 16,4 - WE / - WK
1.6	81	05/14→07/17				13.0470-7294.2	LD7294	ATE 25009 16,4 - WE / - WK Ceramic
1.6 TDI	66 - 85	04/13→						
1.6 TDI 4motion	77 - 81	11/12→						
2.0 GTD	135	04/13→						
2.0 GTI	155 - 180	04/13→						
2.0 GTI Clubsport	195	02/16→03/17						
2.0 GTI TCR	213	11/18→						
2.0 R 4motion	206 - 221	11/13→						
2.0 TDI	81 - 110	08/12→						
2.0 TDI 4motion	110	11/12→08/20						
1.2 TSI	63	08/12→03/17	←	11/12→; +PR 1LJ / 1LM		13.0460-2617.2	602617	TRW + WK
1.4 TSI	103	08/12→03/17				13.0470-2617.2	LD2617	TRW + WK Ceramic
1.6 TDI	77	08/12→03/17						
			←	11/12→; +PR 1ZA / 1ZB / 1ZD / 1ZE / 1ZP / 1LV / 1ZC / 1ZG		13.0460-2785.2	602785	TRW 25683 20,4 + WE / + WK
						13.0470-2785.2	LD2785	TRW 25683 20,4 + WE / + WK Ceramic
			→	11/12→; +PR 1KE / 1KK; + eFSB		13.0460-7293.2	607293	ATE 25008 16,3 - WE / - WK
						13.0470-7293.2	LD7293	ATE 25008 16,3 - WE / - WK Ceramic
			→	11/12→; +PR 1KJ / 1KV / 1KY; + eFSB		13.0460-7294.2	607294	ATE 25009 16,4 - WE / - WK
						13.0470-7294.2	LD7294	ATE 25009 16,4 - WE / - WK Ceramic
1.4 TGI CNG	81	06/13→	←	08/13→; +PR 1LJ / 1LM		13.0460-2617.2	602617	TRW + WK
						13.0470-2617.2	LD2617	TRW + WK Ceramic
			←	08/13→; +PR 1ZA / 1ZB / 1ZD / 1ZE / 1ZP / 1LV / 1ZC / 1ZG		13.0460-2785.2	602785	TRW 25683 20,4 + WE / + WK
						13.0470-2785.2	LD2785	TRW 25683 20,4 + WE / + WK Ceramic
			→	08/13→; +PR 1KE / 1KK; + eFSB		13.0460-7293.2	607293	ATE 25008 16,3 - WE / - WK
						13.0470-7293.2	LD7293	ATE 25008 16,3 - WE / - WK Ceramic
			→	08/13→; +PR 1KJ / 1KV / 1KY; + eFSB		13.0460-7294.2	607294	ATE 25009 16,4 - WE / - WK
						13.0470-7294.2	LD7294	ATE 25009 16,4 - WE / - WK Ceramic
1.4 TSI	90	11/12→	←	06/13→; +PR 1LJ / 1LM		13.0460-2617.2	602617	TRW + WK
1.6 TDI	81	01/13→				13.0470-2617.2	LD2617	TRW + WK Ceramic
			←	06/13→; +PR 1ZA / 1ZB / 1ZD / 1ZE / 1ZP / 1LV / 1ZC / 1ZG		13.0460-2785.2	602785	TRW 25683 20,4 + WE / + WK
						13.0470-2785.2	LD2785	TRW 25683 20,4 + WE / + WK Ceramic
			→	06/13→; +PR 1KE / 1KK; + eFSB		13.0460-7293.2	607293	ATE 25008 16,3 - WE / - WK
						13.0470-7293.2	LD7293	ATE 25008 16,3 - WE / - WK Ceramic
			→	06/13→; +PR 1KJ / 1KV / 1KY; + eFSB		13.0460-7294.2	607294	ATE 25009 16,4 - WE / - WK
						13.0470-7294.2	LD7294	ATE 25009 16,4 - WE / - WK Ceramic
2.0 GTI Clubsport S	228	09/16→	←	+PR 1LJ / 1LM		13.0460-2617.2	602617	TRW + WK
2.0 R 360S 4motion	265	09/16→	←	+PR 1ZA / 1ZB / 1ZD / 1ZE / 1ZP / 1LV / 1ZC / 1ZG		13.0460-2785.2	602785	TRW 25683 20,4 + WE / + WK
2.0 R 4motion	228	12/16→						
			→	+PR 1KE / 1KK; + eFSB		13.0460-7293.2	607293	ATE 25008 16,3 - WE / - WK
			→	+PR 1KJ / 1KV / 1KY; + eFSB		13.0460-7294.2	607294	ATE 25009 16,4 - WE / - WK
e-Golf	85	03/14→02/17	←	08/14→; +PR 1ZE / 1ZP		13.0460-2785.2	602785	TRW 25683 20,4 + WE / + WK
						13.0470-2785.2	LD2785	TRW 25683 20,4 + WE / + WK Ceramic
			→	08/14→; +PR 1KE / 1KR; + eFSB		13.0460-7293.2	607293	ATE 25008 16,3 - WE / - WK
						13.0470-7293.2	LD7293	ATE 25008 16,3 - WE / - WK Ceramic
e-Golf	100	12/16→	←	+PR 1ZE / 1ZP		13.0460-2785.2	602785	TRW 25683 20,4 + WE / + WK
						13.0470-2785.2	LD2785	TRW 25683 20,4 + WE / + WK Ceramic

VW - GOLF VII (5G1, BQ1, BE1, BE2) 08/12→

	kW				! #			
Brake Pad Set, disc brake								
e-Golf	100	12/16→	➡	+PR 1KE / 1KR; + eFSB		**13.0460-7293.2**	**607293**	ATE 25008 16,3 - WE / - WK
						13.0470-7293.2	**LD7293**	ATE 25008 16,3 - WE / - WK Ceramic
Warning Contact, brake pad wear								
1.0 TSI	63 - 85	05/15→	⬅	+PR 1LJ / 1LM	1	**24.8190-0065.2**	**620065**	
1.2 TSI	77 - 81	11/12→						
1.4 GTE Hybrid	110	05/14→						
1.4 TSI	92 - 110	05/14→						
1.4 TSI MultiFuel	90 - 92	04/13→						
1.5 TGI	96	11/18→						
1.5 TSI	96 - 110	04/17→						
1.6	81	05/14→07/17						
1.6 TDI	66 - 85	04/13→						
1.6 TDI 4motion	77 - 81	11/12→						
2.0 GTD	135	04/13→						
2.0 GTI	155 - 180	04/13→						
2.0 GTI Clubsport	195	02/16→03/17						
2.0 GTI Clubsport S	228	09/16→						
2.0 GTI TCR	213	11/18→						
2.0 R 360S 4motion	265	09/16→						
2.0 R 4motion	206 - 228	11/13→						
2.0 TDI	81 - 110	08/12→						
2.0 TDI 4motion	110	11/12→08/20						
1.2 TSI	63	08/12→03/17	⬅	11/12→; +PR 1LJ / 1LM	1	**24.8190-0065.2**	**620065**	
1.4 TSI	103	08/12→03/17						
1.6 TDI	77	08/12→03/17						
1.4 TGI CNG	81	06/13→	⬅	08/13→; +PR 1LJ / 1LM	1	**24.8190-0065.2**	**620065**	
1.4 TSI	90	11/12→	⬅	06/13→; +PR 1LJ / 1LM	1	**24.8190-0065.2**	**620065**	
1.6 TDI	81	01/13→						
Brake Disc								
1.0 TSI	63 - 85	05/15→	⬅	+PR 1ZE / 1ZP		**24.0125-0145.1**	**425145**	Ø 288 Brake Disc Thickness [mm] 25 Minimum thickness [mm] 22 Vented + S
1.2 TSI	77 - 81	11/12→						
1.4 GTE Hybrid	110	05/14→	⬅	+PR 1ZA / 1ZB / 1ZD / 1LV / 1ZC / 1ZG		**24.0125-0158.1**	**425158**	Ø 312 Brake Disc Thickness [mm] 25 Minimum thickness [mm] 22 Vented + S
1.4 TSI	92 - 110	05/14→						
1.4 TSI MultiFuel	90 - 92	04/13→						
1.5 TGI	96	11/18→				**24.0325-0158.1**	**525158**	Ø 312 Brake Disc Thickness [mm] 25 Minimum thickness [mm] 22 Vented + S
1.5 TSI	96 - 110	04/17→						
1.6 TDI	66 - 85	04/13→	⬅	+PR 1LJ / 1LM		**24.0130-0225.1**	**430225**	Ø 340 Brake Disc Thickness [mm] 30 Minimum thickness [mm] 27 Vented + S
1.6 TDI 4motion	77 - 81	11/12→						
2.0 GTD	135	04/13→						
2.0 GTI	162 - 180	04/13→	➡	+PR 1KE / 1KK; + eFSB		**24.0110-0356.1**	**410356**	Ø 272 Brake Disc Thickness [mm] 9.7 Minimum thickness [mm] 8 + S
2.0 GTI Clubsport	195	02/16→03/17						
2.0 GTI Clubsport S	228	09/16→						
2.0 GTI TCR	213	11/18→	➡	+PR 1KV; + eFSB		**24.0112-0210.1**	**412210**	Ø 300 Brake Disc Thickness [mm] 12 Minimum thickness [mm] 10 + S
2.0 R 4motion	206 - 228	11/13→						
2.0 TDI	110	08/12→	➡	+PR 1KJ / 1KY; + eFSB		**24.0122-0219.1**	**422219**	Ø 310 Brake Disc Thickness [mm] 22 Minimum thickness [mm] 20 Vented
2.0 TDI 4motion	110	11/12→08/20						
1.2 TSI	63	08/12→03/17	⬅	11/12→; +PR 1ZE / 1ZP		**24.0125-0145.1**	**425145**	Ø 288 Brake Disc Thickness [mm] 25 Minimum thickness [mm] 22 Vented + S
1.4 TSI	103	08/12→03/17						
1.6 TDI	77	08/12→03/17						
			⬅	11/12→; +PR 1ZA / 1ZB / 1ZD / 1LV / 1ZC / 1ZG		**24.0125-0158.1**	**425158**	Ø 312 Brake Disc Thickness [mm] 25 Minimum thickness [mm] 22 Vented + S

© 2022 Continental Aftermarket & Services GmbH

VW - GOLF VII (5G1, BQ1, BE1, BE2) 08/12→

Brake Disc

	kW				! #			
1.2 TSI 1.4 TSI 1.6 TDI	63 103 77	08/12→03/17 08/12→03/17 08/12→03/17	←	11/12→; +PR 1ZA / 1ZB / 1ZD / 1LV / 1ZC / 1ZG		**24.0325-0158.1**	**525158**	Ø 312 Brake Disc Thickness [mm] 25 Minimum thickness [mm] 22 Vented + S
			←	11/12→; +PR 1LJ / 1LM		**24.0130-0225.1**	**430225**	Ø 340 Brake Disc Thickness [mm] 30 Minimum thickness [mm] 27 Vented + S
			→	11/12→; +PR 1KE / 1KK; + eFSB		**24.0110-0356.1**	**410356**	Ø 272 Brake Disc Thickness [mm] 9.7 Minimum thickness [mm] 8 + S
			→	11/12→; +PR 1KV; + eFSB		**24.0112-0210.1**	**412210**	Ø 300 Brake Disc Thickness [mm] 12 Minimum thickness [mm] 10 + S
			→	11/12→; +PR 1KJ / 1KY; + eFSB		**24.0122-0219.1**	**422219**	Ø 310 Brake Disc Thickness [mm] 22 Minimum thickness [mm] 20 Vented
1.4 TGI CNG	81	06/13→	←	08/13→; +PR 1ZE / 1ZP		**24.0125-0145.1**	**425145**	Ø 288 Brake Disc Thickness [mm] 25 Minimum thickness [mm] 22 Vented + S
			←	08/13→; +PR 1ZA / 1ZB / 1ZD / 1LV / 1ZC / 1ZG		**24.0125-0158.1** **24.0325-0158.1**	**425158** **525158**	Ø 312 Brake Disc Thickness [mm] 25 Minimum thickness [mm] 22 Vented + S Ø 312 Brake Disc Thickness [mm] 25 Minimum thickness [mm] 22 Vented + S
			←	08/13→; +PR 1LJ / 1LM		**24.0130-0225.1**	**430225**	Ø 340 Brake Disc Thickness [mm] 30 Minimum thickness [mm] 27 Vented + S
			→	08/13→; +PR 1KE / 1KK; + eFSB		**24.0110-0356.1**	**410356**	Ø 272 Brake Disc Thickness [mm] 9.7 Minimum thickness [mm] 8 + S
			→	08/13→; +PR 1KV; + eFSB		**24.0112-0210.1**	**412210**	Ø 300 Brake Disc Thickness [mm] 12 Minimum thickness [mm] 10 + S
			→	08/13→; +PR 1KJ / 1KY; + eFSB		**24.0122-0219.1**	**422219**	Ø 310 Brake Disc Thickness [mm] 22 Minimum thickness [mm] 20 Vented
1.4 TSI 1.6 TDI	90 81	11/12→ 01/13→	←	06/13→; +PR 1ZE / 1ZP		**24.0125-0145.1**	**425145**	Ø 288 Brake Disc Thickness [mm] 25 Minimum thickness [mm] 22 Vented + S
			←	06/13→; +PR 1ZA / 1ZB / 1ZD / 1LV / 1ZC / 1ZG		**24.0125-0158.1** **24.0325-0158.1**	**425158** **525158**	Ø 312 Brake Disc Thickness [mm] 25 Minimum thickness [mm] 22 Vented + S Ø 312 Brake Disc Thickness [mm] 25 Minimum thickness [mm] 22 Vented + S
			←	06/13→; +PR 1LJ / 1LM		**24.0130-0225.1**	**430225**	Ø 340 Brake Disc Thickness [mm] 30 Minimum thickness [mm] 27 Vented + S
			→	06/13→; +PR 1KE / 1KK; + eFSB		**24.0110-0356.1**	**410356**	Ø 272 Brake Disc Thickness [mm] 9.7 Minimum thickness [mm] 8 + S
			→	06/13→; +PR 1KV; + eFSB		**24.0112-0210.1**	**412210**	Ø 300 Brake Disc Thickness [mm] 12 Minimum thickness [mm] 10 + S
			→	06/13→; +PR 1KJ / 1KY; + eFSB		**24.0122-0219.1**	**422219**	Ø 310 Brake Disc Thickness [mm] 22 Minimum thickness [mm] 20 Vented
1.6 2.0 GTI 2.0 R 360S 4motion 2.0 TDI	81 155 265 81 - 105	05/14→07/17 11/13→ 09/16→ 08/12→	←	+PR 1ZE / 1ZP		**24.0125-0145.1**	**425145**	Ø 288 Brake Disc Thickness [mm] 25 Minimum thickness [mm] 22 Vented + S

VW - GOLF VII (5G1, BQ1, BE1, BE2) 08/12→

Brake Disc

	kW				! #			
1.6 2.0 GTI 2.0 R 360S 4motion 2.0 TDI	81 155 265 81 - 105	05/14→07/17 11/13→ 09/16→ 08/12→	←	+PR 1ZA / 1ZB / 1ZD / 1LV / 1ZC / 1ZG		**24.0125-0158.1**	**425158**	Ø 312 Brake Disc Thickness [mm] 25 Minimum thickness [mm] 22 Vented + S
			←	+PR 1LJ / 1LM		**24.0130-0225.1**	**430225**	Ø 340 Brake Disc Thickness [mm] 30 Minimum thickness [mm] 27 Vented + S
			→	+PR 1KE / 1KK; + eFSB		**24.0110-0356.1**	**410356**	Ø 272 Brake Disc Thickness [mm] 9.7 Minimum thickness [mm] 8 + S
			→	+PR 1KV; + eFSB		**24.0112-0210.1**	**412210**	Ø 300 Brake Disc Thickness [mm] 12 Minimum thickness [mm] 10 + S
			→	+PR 1KJ / 1KY; + eFSB		**24.0122-0219.1**	**422219**	Ø 310 Brake Disc Thickness [mm] 22 Minimum thickness [mm] 20 Vented
e-Golf	85	03/14→02/17	←	08/14→; +PR 1ZE / 1ZP		**24.0125-0145.1**	**425145**	Ø 288 Brake Disc Thickness [mm] 25 Minimum thickness [mm] 22 Vented + S
			→	08/14→; +PR 1KE / 1KR; + eFSB		**24.0110-0356.1**	**410356**	Ø 272 Brake Disc Thickness [mm] 9.7 Minimum thickness [mm] 8 + S
e-Golf	100	12/16→	←	+PR 1ZE / 1ZP		**24.0125-0145.1**	**425145**	Ø 288 Brake Disc Thickness [mm] 25 Minimum thickness [mm] 22 Vented + S
			→	+PR 1KE / 1KR; + eFSB		**24.0110-0356.1**	**410356**	Ø 272 Brake Disc Thickness [mm] 9.7 Minimum thickness [mm] 8 + S

Sensor, wheel speed

1.0 TSI 1.2 TSI 1.4 GTE Hybrid 1.4 TSI 1.4 TSI MultiFuel 1.5 TGI 1.5 TSI 1.6 1.6 TDI 2.0 GTD 2.0 GTI 2.0 GTI Clubsport 2.0 GTI Clubsport S 2.0 GTI TCR 2.0 TDI e-Golf	63 - 85 77 - 81 110 92 - 110 90 - 92 96 96 - 110 81 66 - 85 135 155 - 180 195 228 213 81 - 110 100	05/15→ 11/12→ 05/14→ 05/14→ 04/13→ 11/18→ 04/17→ 05/14→07/17 04/13→ 04/13→ 04/13→ 02/16→03/17 09/16→ 11/18→ 08/12→ 12/16→	←	■□		**24.0711-5273.3**	**360303**	
			←	□■		**24.0711-5274.3**	**360304**	
			→	for cruise control system	2	**24.0711-6337.3**	**360390**	
			→	for vehicles with parking assistant system	2	**24.0711-6337.3**	**360390**	
1.2 TSI 1.4 TSI 1.6 TDI	63 103 77	08/12→03/17 08/12→03/17 08/12→03/17	←	11/12→; ■□		**24.0711-5273.3**	**360303**	
			←	11/12→; □■		**24.0711-5274.3**	**360304**	
			→	11/12→; for cruise control system	2	**24.0711-6337.3**	**360390**	
			→	11/12→; for vehicles with parking assistant system	2	**24.0711-6337.3**	**360390**	
1.4 TGI CNG	81	06/13→	←	08/13→; ■□		**24.0711-5273.3**	**360303**	
			←	08/13→; □■		**24.0711-5274.3**	**360304**	
			→	08/13→; for cruise control system	2	**24.0711-6337.3**	**360390**	
			→	08/13→; for vehicles with parking assistant system	2	**24.0711-6337.3**	**360390**	
1.4 TSI 1.6 TDI	90 81	11/12→ 01/13→	←	06/13→; ■□		**24.0711-5273.3**	**360303**	
			←	06/13→; □■		**24.0711-5274.3**	**360304**	
			→	06/13→; for cruise control system	2	**24.0711-6337.3**	**360390**	
			→	06/13→; for vehicles with parking assistant system	2	**24.0711-6337.3**	**360390**	

© 2022 Continental Aftermarket & Services GmbH

	kW				! #			
VW - GOLF VII (5G1, BQ1, BE1, BE2) 08/12→								
Sensor, wheel speed								
1.6 TDI 4motion	77 - 81	11/12→	←			**24.0711-5273.3**	**360303**	
2.0 R 360S 4motion	265	09/16→	←			**24.0711-5274.3**	**360304**	
2.0 R 4motion	206 - 228	11/13→	→	for vehicles with parking assistant system;		**24.0711-5401.3**	**360330**	
2.0 TDI 4motion	110	11/12→08/20	→	for cruise control system;		**24.0711-5401.3**	**360330**	
			→	for cruise control system;		**24.0711-5402.3**	**360331**	
			→	for vehicles with parking assistant system;		**24.0711-5402.3**	**360331**	
e-Golf	85	03/14→02/17	←	08/14→;		**24.0711-5273.3**	**360303**	
			←	08/14→;		**24.0711-5274.3**	**360304**	
			→	08/14→; for cruise control system	2	**24.0711-6337.3**	**360390**	
			→	08/14→; for vehicles with parking assistant system	2	**24.0711-6337.3**	**360390**	
Slave Cylinder, clutch								
1.0 TSI	63 - 85	05/15→		+PR 0EC / 0EM		**24.2519-1706.3**	**040096**	Ø 19
1.2 TSI	77 - 81	11/12→						
1.4 GTE Hybrid	110	05/14→						
1.4 TSI	92 - 110	05/14→						
1.4 TSI MultiFuel	90 - 92	04/13→						
1.5 TGI	96	11/18→						
1.5 TSI	96 - 110	04/17→						
1.6	81	05/14→07/17						
1.6 TDI	66 - 85	04/13→						
1.6 TDI 4motion	77 - 81	11/12→						
2.0 GTD	135	04/13→						
2.0 GTI	155 - 180	04/13→						
2.0 GTI Clubsport	195	02/16→03/17						
2.0 GTI Clubsport S	228	09/16→						
2.0 GTI TCR	213	11/18→						
2.0 R 360S 4motion	265	09/16→						
2.0 R 4motion	206 - 228	11/13→						
2.0 TDI	81 - 110	08/12→						
2.0 TDI 4motion	110	11/12→08/20						
1.2 TSI	63	08/12→03/17		11/12→; +PR 0EC / 0EM		**24.2519-1706.3**	**040096**	Ø 19
1.4 TSI	103	08/12→03/17						
1.6 TDI	77	08/12→03/17						
1.4 TGI CNG	81	06/13→		08/13→; +PR 0EC / 0EM		**24.2519-1706.3**	**040096**	Ø 19
1.4 TSI	90	11/12→		06/13→; +PR 0EC / 0EM		**24.2519-1706.3**	**040096**	Ø 19
1.6 TDI	81	01/13→						
Control Element, parking brake caliper								
1.0 TSI	63 - 85	05/15→	→	+PR 1KE;		**11.9282-1001.3**	**250159**	ATE
1.2 TSI	77 - 81	11/12→	→	+PR 1KE;		**11.9282-1002.3**	**250160**	ATE
1.4 GTE Hybrid	110	05/14→						
1.4 TSI	92 - 110	05/14→						
1.4 TSI MultiFuel	90 - 92	04/13→						
1.5 TGI	96	11/18→						
1.5 TSI	96 - 110	04/17→						
1.6	81	05/14→07/17						
1.6 TDI	66 - 85	04/13→						
1.6 TDI 4motion	77 - 81	11/12→						
2.0 GTD	135	04/13→						
2.0 GTI	155 - 180	04/13→						
2.0 GTI Clubsport	195	02/16→03/17						
2.0 GTI Clubsport S	228	09/16→						
2.0 GTI TCR	213	11/18→						
2.0 R 360S 4motion	265	09/16→						
2.0 R 4motion	206 - 228	11/13→						

	kW				! #			
VW - GOLF VII (5G1, BQ1, BE1, BE2) 08/12→								
Control Element, parking brake caliper								
2.0 TDI	81 - 110	08/12→	➡	+PR 1KE;		**11.9282-1001.3**	**250159**	ATE
2.0 TDI 4motion	110	11/12→08/20	➡	+PR 1KE;		**11.9282-1002.3**	**250160**	ATE
1.2 TSI	63	08/12→03/17	➡	11/12→; +PR 1KE;		**11.9282-1001.3**	**250159**	ATE
1.4 TSI	103	08/12→03/17						
1.6 TDI	77	08/12→03/17	➡	11/12→; +PR 1KE;		**11.9282-1002.3**	**250160**	ATE
1.4 TGI CNG	81	06/13→	➡	08/13→; +PR 1KE;		**11.9282-1001.3**	**250159**	ATE
			➡	08/13→; +PR 1KE;		**11.9282-1002.3**	**250160**	ATE
1.4 TSI	90	11/12→	➡	06/13→; +PR 1KE;		**11.9282-1001.3**	**250159**	ATE
1.6 TDI	81	01/13→	➡	06/13→; +PR 1KE;		**11.9282-1002.3**	**250160**	ATE
e-Golf	85	03/14→02/17	➡	08/14→; +PR 1KE / 1KR;		**11.9282-1001.3**	**250159**	ATE
			➡	08/14→; +PR 1KE / 1KR;		**11.9282-1002.3**	**250160**	ATE
e-Golf	100	12/16→	➡	+PR 1KE / 1KR;		**11.9282-1001.3**	**250159**	ATE
			➡	+PR 1KE / 1KR;		**11.9282-1002.3**	**250160**	ATE
VW - GOLF VII Van (5G1) 08/12→								
Brake Master Cylinder								
1.2 TSi BlueMotion 1.4 TSi BlueMotion 1.6 TDi BlueMotion	63 103 77	08/12→ 08/12→ 08/12→		11/12→; for left-hand drive vehicles; +PR 1ZA / 1ZD / 1ZE / 1ZF / 1ZP		**24.4123-1719.3**	**011017**	TRW Ø 23.8 without brake fluid reservoir
1.2 TSi BlueMotion 1.4 TSi BlueMotion 1.6 TDi BlueMotion 2.0 GTD 2.0 GTi 2.0 TDi BlueMotion 2.0 TDi BlueMotion 4motion	77 90 66 - 81 135 162 - 169 110 110	11/12→ 05/13→ 04/13→ 04/13→ 04/13→ 05/13→ 05/13→		for left-hand drive vehicles; +PR 1ZA / 1ZD / 1ZE / 1ZF / 1ZP		**24.4123-1719.3**	**011017**	TRW Ø 23.8 without brake fluid reservoir
Brake Caliper								
1.2 TSi BlueMotion 1.4 TSi BlueMotion 1.6 TDi BlueMotion	63 103 77	08/12→ 08/12→ 08/12→	⬅	11/12→; +PR 1ZA / 1ZD;		**24.3571-1801.5**	**241387**	without holder
			⬅	11/12→; +PR 1ZA / 1ZD;		**24.3571-1802.5**	**241388**	without holder
			➡	11/12→; +PR 1KK; + eFSB;		**24.6238-7023.5** **24.6238-7047.5**	**241241** **241181**	ATE without holder + eFSB ATE without holder + eFSB
			➡	11/12→; +PR 1KE; + eFSB;		**24.6238-7023.5** **24.6238-7047.5**	**241241** **241181**	ATE without holder + eFSB ATE without holder + eFSB
			➡	11/12→; +PR 1KE; + eFSB;		**24.6238-7024.5** **24.6238-7048.5**	**241242** **241182**	ATE without holder + eFSB ATE without holder + eFSB
			➡	11/12→; +PR 1KK; + eFSB;		**24.6238-7024.5** **24.6238-7048.5**	**241242** **241182**	ATE without holder + eFSB ATE without holder + eFSB
			➡	11/12→; +PR 1KJ; + eFSB;		**24.6242-7017.5**	**241185**	ATE without holder + eFSB
			➡	11/12→; +PR 1KJ; + eFSB;		**24.6242-7018.5**	**241186**	ATE without holder + eFSB
1.2 TSi BlueMotion 1.4 TSi BlueMotion 1.6 TDi BlueMotion 2.0 GTD 2.0 GTi 2.0 TDi BlueMotion 2.0 TDi BlueMotion 4motion	77 90 66 - 81 135 162 - 169 110 110	11/12→ 05/13→ 04/13→ 04/13→ 04/13→ 05/13→ 05/13→	⬅	+PR 1ZA / 1ZD;		**24.3571-1801.5**	**241387**	without holder
			⬅	+PR 1ZA / 1ZD;		**24.3571-1802.5**	**241388**	without holder
			➡	+PR 1KE; + eFSB;		**24.6238-7023.5** **24.6238-7047.5**	**241241** **241181**	ATE without holder + eFSB ATE without holder + eFSB
			➡	+PR 1KK; + eFSB;		**24.6238-7023.5** **24.6238-7047.5**	**241241** **241181**	ATE without holder + eFSB ATE without holder + eFSB
			➡	+PR 1KE; + eFSB;		**24.6238-7024.5** **24.6238-7048.5**	**241242** **241182**	ATE without holder + eFSB ATE without holder + eFSB
			➡	+PR 1KK; + eFSB;		**24.6238-7024.5** **24.6238-7048.5**	**241242** **241182**	ATE without holder + eFSB ATE without holder + eFSB
			➡	+PR 1KJ; + eFSB;		**24.6242-7017.5**	**241185**	ATE without holder + eFSB
			➡	+PR 1KJ; + eFSB;		**24.6242-7018.5**	**241186**	ATE without holder + eFSB
Brake Pad Set, disc brake								
1.2 TSi BlueMotion 1.4 TSi BlueMotion 1.6 TDi BlueMotion	63 103 77	08/12→ 08/12→ 08/12→	⬅	11/12→; +PR 1LJ / 1LM		**13.0460-2617.2** **13.0470-2617.2**	**602617** **LD2617**	TRW + WK TRW + WK Ceramic
			⬅	11/12→; +PR 1ZA / 1ZB / 1ZD / 1ZE / 1ZP / 1LV / 1ZC / 1ZG		**13.0460-2785.2** **13.0470-2785.2**	**602785** **LD2785**	TRW 25683 20,4 + WE / + WK TRW 25683 20,4 + WE / + WK Ceramic
			➡	11/12→; +PR 1KE / 1KK; + eFSB		**13.0460-7293.2**	**607293**	ATE 25008 16,3 - WE / - WK

© 2022 Continental Aftermarket & Services GmbH

VW - GOLF VII Van (5G1) 08/12→

Brake Pad Set, disc brake

	kW				! #			
1.2 TSi BlueMotion 1.4 TSi BlueMotion 1.6 TDi BlueMotion	63 103 77	08/12→ 08/12→ 08/12→	→	11/12→; +PR 1KE / 1KK; + eFSB		**13.0470-7293.2**	**LD7293**	ATE 25008 16,3 - WE / - WK Ceramic
			→	11/12→; +PR 1KJ / 1KV / 1KY; + eFSB		**13.0460-7294.2** **13.0470-7294.2**	**607294** **LD7294**	ATE 25009 16,4 - WE / - WK ATE 25009 16,4 - WE / - WK Ceramic
1.2 TSi BlueMotion 1.4 TSi BlueMotion 1.6 TDi BlueMotion 2.0 GTD 2.0 GTi 2.0 TDi BlueMotion 2.0 TDi BlueMotion 4motion	77 90 66 - 81 135 162 - 169 110 110	11/12→ 05/13→ 04/13→ 04/13→ 04/13→ 05/13→ 05/13→	←	+PR 1LJ / 1LM		**13.0460-2617.2** **13.0470-2617.2**	**602617** **LD2617**	TRW + WK TRW + WK Ceramic
			←	+PR 1ZA / 1ZB / 1ZD / 1ZE / 1ZP / 1LV / 1ZC / 1ZG		**13.0460-2785.2** **13.0470-2785.2**	**602785** **LD2785**	TRW 25683 20,4 + WE / + WK TRW 25683 20,4 + WE / + WK Ceramic
			→	+PR 1KE / 1KK; + eFSB		**13.0460-7293.2** **13.0470-7293.2**	**607293** **LD7293**	ATE 25008 16,3 - WE / - WK ATE 25008 16,3 - WE / - WK Ceramic
			→	+PR 1KJ / 1KV / 1KY; + eFSB		**13.0460-7294.2** **13.0470-7294.2**	**607294** **LD7294**	ATE 25009 16,4 - WE / - WK ATE 25009 16,4 - WE / - WK Ceramic

Warning Contact, brake pad wear

1.2 TSi BlueMotion 1.4 TSi BlueMotion 1.6 TDi BlueMotion	63 103 77	08/12→ 08/12→ 08/12→	←	11/12→; +PR 1LJ / 1LM	1	**24.8190-0065.2**	**620065**	
1.2 TSi BlueMotion 1.4 TSi BlueMotion 1.6 TDi BlueMotion 2.0 GTD 2.0 GTi 2.0 TDi BlueMotion 2.0 TDi BlueMotion 4motion	77 90 66 - 81 135 162 - 169 110 110	11/12→ 05/13→ 04/13→ 04/13→ 04/13→ 05/13→ 05/13→	←	+PR 1LJ / 1LM	1	**24.8190-0065.2**	**620065**	

Brake Disc

1.2 TSi BlueMotion 1.4 TSi BlueMotion 1.6 TDi BlueMotion	63 103 77	08/12→ 08/12→ 08/12→	←	11/12→; +PR 1ZE / 1ZP		**24.0125-0145.1**	**425145**	Ø 288 Brake Disc Thickness [mm] 25 Minimum thickness [mm] 22 Vented + S
			←	11/12→; +PR 1ZA / 1ZB / 1ZD / 1LV / 1ZC / 1ZG		**24.0125-0158.1**	**425158**	Ø 312 Brake Disc Thickness [mm] 25 Minimum thickness [mm] 22 Vented + S
			←	11/12→; +PR 1LJ / 1LM		**24.0130-0225.1**	**430225**	Ø 340 Brake Disc Thickness [mm] 30 Minimum thickness [mm] 27 Vented + S
			→	11/12→; +PR 1KE / 1KK; + eFSB		**24.0110-0356.1**	**410356**	Ø 272 Brake Disc Thickness [mm] 9.7 Minimum thickness [mm] 8 + S
			→	11/12→; +PR 1KV; + eFSB		**24.0112-0210.1**	**412210**	Ø 300 Brake Disc Thickness [mm] 12 Minimum thickness [mm] 10 + S
			→	11/12→; +PR 1KJ / 1KY; + eFSB		**24.0122-0219.1**	**422219**	Ø 310 Brake Disc Thickness [mm] 22 Minimum thickness [mm] 20 Vented
1.2 TSi BlueMotion 1.4 TSi BlueMotion 1.6 TDi BlueMotion 2.0 GTD 2.0 GTi 2.0 TDi BlueMotion 2.0 TDi BlueMotion 4motion	77 90 66 - 81 135 162 - 169 110 110	11/12→ 05/13→ 04/13→ 04/13→ 04/13→ 05/13→ 05/13→	←	+PR 1ZE / 1ZP		**24.0125-0145.1**	**425145**	Ø 288 Brake Disc Thickness [mm] 25 Minimum thickness [mm] 22 Vented + S
			←	+PR 1ZA / 1ZB / 1ZD / 1LV / 1ZC / 1ZG		**24.0125-0158.1**	**425158**	Ø 312 Brake Disc Thickness [mm] 25 Minimum thickness [mm] 22 Vented + S
			←	+PR 1LJ / 1LM		**24.0130-0225.1**	**430225**	Ø 340 Brake Disc Thickness [mm] 30 Minimum thickness [mm] 27 Vented + S
			→	+PR 1KE / 1KK; + eFSB		**24.0110-0356.1**	**410356**	Ø 272 Brake Disc Thickness [mm] 9.7 Minimum thickness [mm] 8 + S
			→	+PR 1KV; + eFSB		**24.0112-0210.1**	**412210**	Ø 300 Brake Disc Thickness [mm] 12 Minimum thickness [mm] 10 + S

	kW				! #			
VW - GOLF VII Van (5G1) 08/12→								
Brake Disc								
1.2 TSi BlueMotion 1.4 TSi BlueMotion 1.6 TDi BlueMotion 2.0 GTD 2.0 GTi 2.0 TDi BlueMotion 2.0 TDi BlueMotion 4motion	77 90 66 - 81 135 162 - 169 110 110	11/12→ 05/13→ 04/13→ 04/13→ 04/13→ 05/13→ 05/13→	➡	+PR 1KJ / 1KY; + eFSB		**24.0122-0219.1**	**422219**	Ø 310 Brake Disc Thickness [mm] 22 Minimum thickness [mm] 20 Vented
Sensor, wheel speed								
1.2 TSi BlueMotion 1.4 TSi BlueMotion 1.6 TDi BlueMotion	63 103 77	08/12→ 08/12→ 08/12→	⬅	11/12→; ⊞		**24.0711-5273.3**	**360303**	
			⬅	11/12→; ⊟		**24.0711-5274.3**	**360304**	
			➡	11/12→; for cruise control system	2	**24.0711-6337.3**	**360390**	
			➡	11/12→; for vehicles with parking assistant system	2	**24.0711-6337.3**	**360390**	
1.2 TSi BlueMotion 1.4 TSi BlueMotion 1.6 TDi BlueMotion 2.0 GTD 2.0 GTi 2.0 TDi BlueMotion	77 90 66 - 81 135 162 - 169 110	11/12→ 05/13→ 04/13→ 04/13→ 04/13→ 05/13→	⬅	⊞		**24.0711-5273.3**	**360303**	
			⬅	⊟		**24.0711-5274.3**	**360304**	
			➡	for cruise control system	2	**24.0711-6337.3**	**360390**	
			➡	for vehicles with parking assistant system	2	**24.0711-6337.3**	**360390**	
2.0 TDi BlueMotion 4motion	110	05/13→	⬅	⊞		**24.0711-5273.3**	**360303**	
			⬅	⊟		**24.0711-5274.3**	**360304**	
			➡	for vehicles with parking assistant system; ⊞		**24.0711-5401.3**	**360330**	
			➡	for cruise control system; ⊞		**24.0711-5401.3**	**360330**	
			➡	for cruise control system; ⊟		**24.0711-5402.3**	**360331**	
			➡	for vehicles with parking assistant system; ⊟		**24.0711-5402.3**	**360331**	
Slave Cylinder, clutch								
1.2 TSi BlueMotion 1.4 TSi BlueMotion 1.6 TDi BlueMotion	63 103 77	08/12→ 08/12→ 08/12→		11/12→; +PR 0EC / 0EM		**24.2519-1706.3**	**040096**	Ø 19
1.2 TSi BlueMotion 1.4 TSi BlueMotion 1.6 TDi BlueMotion 2.0 GTD 2.0 GTi 2.0 TDi BlueMotion 2.0 TDi BlueMotion 4motion	77 90 66 - 81 135 162 - 169 110 110	11/12→ 05/13→ 04/13→ 04/13→ 04/13→ 05/13→ 05/13→		+PR 0EC / 0EM		**24.2519-1706.3**	**040096**	Ø 19
Control Element, parking brake caliper								
1.2 TSi BlueMotion 1.4 TSi BlueMotion 1.6 TDi BlueMotion	63 103 77	08/12→ 08/12→ 08/12→	➡	11/12→; +PR 1KE; ⊞		**11.9282-1001.3**	**250159**	ATE
			➡	11/12→; +PR 1KE; ⊟		**11.9282-1002.3**	**250160**	ATE
1.2 TSi BlueMotion 1.4 TSi BlueMotion 1.6 TDi BlueMotion 2.0 GTD 2.0 GTi 2.0 TDi BlueMotion 2.0 TDi BlueMotion 4motion	77 90 66 - 81 135 162 - 169 110 110	11/12→ 05/13→ 04/13→ 04/13→ 04/13→ 05/13→ 05/13→	➡	+PR 1KE; ⊞		**11.9282-1001.3**	**250159**	ATE
			➡	+PR 1KE; ⊟		**11.9282-1002.3**	**250160**	ATE
VW - GOLF VII Variant (BA5, BV5) 04/13→								
Brake Master Cylinder								
1.0 TSI 1.2 TSI 1.4 TGI CNG 1.4 TSI 1.4 TSI MultiFuel 1.5 TGI	63 - 85 81 81 92 - 110 90 - 92 96	05/15→ 04/14→ 09/13→ 05/14→ 04/13→03/17 12/18→		for left-hand drive vehicles; +PR 1ZA / 1ZD / 1ZE / 1ZF / 1ZP		**24.4123-1719.3**	**011017**	TRW Ø 23.8 without brake fluid reservoir

© 2022 Continental Aftermarket & Services GmbH

VW - GOLF VII Variant (BA5, BV5) 04/13→

Brake Master Cylinder

	kW				! #			
1.5 TSI	96 - 110	04/17→		for left-hand drive vehicles; +PR 1ZA / 1ZD / 1ZE / 1ZF / 1ZP		**24.4123-1719.3**	**011017**	TRW Ø 23.8 without brake fluid reservoir
1.6	81	05/14→03/17						
1.6 TDI	85	11/16→						
1.8 TSI 4motion	132	11/16→						
2.0 GTD	135	01/15→03/17						
2.0 R 360S 4motion	265	09/16→						
2.0 R 4motion	206 - 228	03/15→						
1.2 TSI	63 - 77	05/13→		07/13→; for left-hand drive vehicles; +PR 1ZA / 1ZD / 1ZE / 1ZF / 1ZP		**24.4123-1719.3**	**011017**	TRW Ø 23.8 without brake fluid reservoir
1.4 TSI	90 - 103	05/13→						
1.6 TDI	66 - 81	05/13→03/17						
1.6 TDI 4motion	77 - 81	05/13→03/17						
2.0 TDI	81 - 110	04/13→						
2.0 TDI 4motion	110	04/13→05/18						

Brake Caliper

	kW				! #			
1.0 TSI	63	01/17→07/18	←	+PR 1ZA / 1ZD;		**24.3571-1801.5**	**241387**	without holder
1.5 TSI	96 - 110	04/17→	←	+PR 1ZA / 1ZD;		**24.3571-1802.5**	**241388**	without holder
			→	+ eFSB;		**24.6238-7023.5**	**241241**	ATE without holder + eFSB
						24.6238-7047.5	**241181**	ATE without holder + eFSB
			→	+ eFSB;		**24.6238-7024.5**	**241242**	ATE without holder + eFSB
						24.6238-7048.5	**241182**	ATE without holder + eFSB
1.0 TSI	81 - 85	05/15→	←	+PR 1ZA / 1ZD;		**24.3571-1801.5**	**241387**	without holder
1.2 TSI	81	04/14→	←	+PR 1ZA / 1ZD;		**24.3571-1802.5**	**241388**	without holder
1.4 TGI CNG	81	09/13→	→	+PR 1KE; + eFSB;		**24.6238-7023.5**	**241241**	ATE without holder + eFSB
1.4 TSI	92 - 110	05/14→				**24.6238-7047.5**	**241181**	ATE without holder + eFSB
1.4 TSI MultiFuel	90 - 92	04/13→03/17	→	+PR 1KE; + eFSB;		**24.6238-7024.5**	**241242**	ATE without holder + eFSB
						24.6238-7048.5	**241182**	ATE without holder + eFSB
1.6	81	05/14→03/17						
1.6 TDI	85	11/16→						
1.8 TSI 4motion	132	11/16→						
2.0 GTD	135	01/15→03/17						
2.0 R 360S 4motion	265	09/16→						
2.0 R 4motion	206 - 228	03/15→						
1.2 TSI	63 - 77	05/13→	←	07/13→; +PR 1ZA / 1ZD;		**24.3571-1801.5**	**241387**	without holder
1.4 TSI	90 - 103	05/13→	←	07/13→; +PR 1ZA / 1ZD;		**24.3571-1802.5**	**241388**	without holder
1.6 TDI	66 - 81	05/13→03/17	→	07/13→; +PR 1KE; + eFSB;		**24.6238-7023.5**	**241241**	ATE without holder + eFSB
						24.6238-7047.5	**241181**	ATE without holder + eFSB
1.6 TDI 4motion	77 - 81	05/13→03/17	→	07/13→; +PR 1KE; + eFSB;		**24.6238-7024.5**	**241242**	ATE without holder + eFSB
						24.6238-7048.5	**241182**	ATE without holder + eFSB
2.0 TDI	81 - 110	04/13→						
2.0 TDI 4motion	110	04/13→05/18						
1.5 TGI	96	12/18→	←	+PR 1ZA / 1ZD;		**24.3571-1801.5**	**241387**	without holder
			←	+PR 1ZA / 1ZD;		**24.3571-1802.5**	**241388**	without holder
			→	+PR 1KK; + eFSB;		**24.6238-7023.5**	**241241**	ATE without holder + eFSB
						24.6238-7047.5	**241181**	ATE without holder + eFSB
			→	+PR 1KE; + eFSB;		**24.6238-7023.5**	**241241**	ATE without holder + eFSB
						24.6238-7047.5	**241181**	ATE without holder + eFSB
			→	+PR 1KK; + eFSB;		**24.6238-7024.5**	**241242**	ATE without holder + eFSB
						24.6238-7048.5	**241182**	ATE without holder + eFSB
			→	+PR 1KE; + eFSB;		**24.6238-7024.5**	**241242**	ATE without holder + eFSB
						24.6238-7048.5	**241182**	ATE without holder + eFSB
			→	+PR 1KJ; + eFSB;		**24.6242-7017.5**	**241185**	ATE without holder + eFSB
			→	+PR 1KJ; + eFSB;		**24.6242-7018.5**	**241186**	ATE without holder + eFSB

Brake Pad Set, disc brake

	kW				! #			
1.0 TSI	63 - 85	05/15→	←	+PR 1LM		**13.0460-2617.2**	**602617**	TRW + WK
						13.0470-2617.2	**LD2617**	TRW + WK Ceramic
1.2 TSI	81	04/14→	←	+PR 1ZA / 1ZB / 1ZD / 1ZE / 1ZP / 1LV		**13.0460-2785.2**	**602785**	TRW 25683 20,4 + WE / + WK
1.4 TGI CNG	81	09/13→				**13.0470-2785.2**	**LD2785**	TRW 25683 20,4 + WE / + WK Ceramic
1.4 TSI	92 - 110	05/14→						

VW - GOLF VII Variant (BA5, BV5) 04/13→

Brake Pad Set, disc brake

	kW				! #			
1.4 TSI MultiFuel	90 - 92	04/13→03/17	➡	+PR 1KE; + eFSB		13.0460-7293.2	607293	ATE 25008 16,3 - WE / - WK
1.5 TSI	96 - 110	04/17→				13.0470-7293.2	LD7293	ATE 25008 16,3 - WE / - WK Ceramic
1.6	81	05/14→03/17	➡	+PR 1KV / 1KY; + eFSB		13.0460-7294.2	607294	ATE 25009 16,4 - WE / - WK
1.6 TDI	85	11/16→				13.0470-7294.2	LD7294	ATE 25009 16,4 - WE / - WK Ceramic
1.8 TSI 4motion	132	11/16→						
2.0 GTD	135	01/15→03/17						
2.0 R 4motion	206 - 221	03/15→07/18						
1.2 TSI	63 - 77	05/13→	⬅	07/13→; +PR 1LM		13.0460-2617.2	602617	TRW + WK
1.4 TSI	90 - 103	05/13→				13.0470-2617.2	LD2617	TRW + WK Ceramic
1.6 TDI	66 - 81	05/13→03/17	⬅	07/13→; +PR 1ZA / 1ZB / 1ZD / 1ZE / 1ZP / 1LV		13.0460-2785.2	602785	TRW 25683 20,4 + WE / + WK
						13.0470-2785.2	LD2785	TRW 25683 20,4 + WE / + WK Ceramic
1.6 TDI 4motion	77 - 81	05/13→03/17	➡	07/13→; +PR 1KE; + eFSB		13.0460-7293.2	607293	ATE 25008 16,3 - WE / - WK
2.0 TDI	81 - 110	04/13→				13.0470-7293.2	LD7293	ATE 25008 16,3 - WE / - WK Ceramic
2.0 TDI 4motion	110	04/13→05/18	➡	07/13→; +PR 1KV / 1KY; + eFSB		13.0460-7294.2	607294	ATE 25009 16,4 - WE / - WK
						13.0470-7294.2	LD7294	ATE 25009 16,4 - WE / - WK Ceramic
1.5 TGI	96	12/18→	⬅	+PR 1LJ / 1LM		13.0460-2617.2	602617	TRW + WK
						13.0470-2617.2	LD2617	TRW + WK Ceramic
			⬅	+PR 1ZA / 1ZB / 1ZD / 1ZE / 1ZP / 1LV / 1ZC / 1ZG		13.0460-2785.2	602785	TRW 25683 20,4 + WE / + WK
						13.0470-2785.2	LD2785	TRW 25683 20,4 + WE / + WK Ceramic
			➡	+PR 1KE / 1KK; + eFSB		13.0460-7293.2	607293	ATE 25008 16,3 - WE / - WK
						13.0470-7293.2	LD7293	ATE 25008 16,3 - WE / - WK Ceramic
			➡	+PR 1KJ / 1KV / 1KY; + eFSB		13.0460-7294.2	607294	ATE 25009 16,4 - WE / - WK
						13.0470-7294.2	LD7294	ATE 25009 16,4 - WE / - WK Ceramic
2.0 R 360S 4motion	265	09/16→	⬅	+PR 1LM		13.0460-2617.2	602617	TRW + WK
2.0 R 4motion	228	12/16→						
			⬅	+PR 1ZA / 1ZB / 1ZD / 1ZE / 1ZP / 1LV		13.0460-2785.2	602785	TRW 25683 20,4 + WE / + WK
			➡	+PR 1KE; + eFSB		13.0460-7293.2	607293	ATE 25008 16,3 - WE / - WK
			➡	+PR 1KV / 1KY; + eFSB		13.0460-7294.2	607294	ATE 25009 16,4 - WE / - WK

Warning Contact, brake pad wear

1.0 TSI	63 - 85	05/15→	⬅	+PR 1LM	1	24.8190-0065.2	620065	
1.2 TSI	81	04/14→	⬅	+PR 1ZA / 1ZB / 1ZD / 1ZE / 1ZP / 1LV	1	24.8190-0065.2	620065	
1.4 TGI CNG	81	09/13→						
1.4 TSI	92 - 110	05/14→						
1.4 TSI MultiFuel	90 - 92	04/13→03/17						
1.5 TSI	96 - 110	04/17→						
1.6	81	05/14→03/17						
1.6 TDI	85	11/16→						
1.8 TSI 4motion	132	11/16→						
2.0 GTD	135	01/15→03/17						
2.0 R 360S 4motion	265	09/16→						
2.0 R 4motion	206 - 228	03/15→						
1.2 TSI	63 - 77	05/13→	⬅	07/13→; +PR 1ZA / 1ZB / 1ZD / 1ZE / 1ZP / 1LV	1	24.8190-0065.2	620065	
1.4 TSI	90 - 103	05/13→	⬅	07/13→; +PR 1LM	1	24.8190-0065.2	620065	
1.6 TDI	66 - 81	05/13→03/17						
1.6 TDI 4motion	77 - 81	05/13→03/17						
2.0 TDI	81 - 110	04/13→						
2.0 TDI 4motion	110	04/13→05/18						
1.5 TGI	96	12/18→	⬅	+PR 1LJ / 1LM	1	24.8190-0065.2	620065	

Brake Disc

1.0 TSI	63 - 85	05/15→	⬅	+PR 1ZE / 1ZP		24.0125-0145.1	425145	Ø 288 Brake Disc Thickness [mm] 25 Minimum thickness [mm] 22 Vented + S
1.2 TSI	81	04/14→						
1.4 TGI CNG	81	09/13→						
1.4 TSI	92 - 110	05/14→						

© 2022 Continental Aftermarket & Services GmbH

	kW				! #			
VW - GOLF VII Variant (BA5, BV5) 04/13→								
Brake Disc								
1.4 TSI MultiFuel 1.5 TSI 1.6 TDI 2.0 R 4motion	90 - 92 96 - 110 85 213 - 228	04/13→03/17 04/17→ 11/16→ 03/15→	←	+PR 1ZA / 1ZB / 1ZD / 1LV		**24.0125-0158.1** **24.0325-0158.1**	**425158** **525158**	Ø 312 Brake Disc Thickness [mm] 25 Minimum thickness [mm] 22 Vented + S Ø 312 Brake Disc Thickness [mm] 25 Minimum thickness [mm] 22 Vented + S
			←	+PR 1LM		**24.0130-0225.1**	**430225**	Ø 340 Brake Disc Thickness [mm] 30 Minimum thickness [mm] 27 Vented + S
			→	+PR 1KE		**24.0110-0356.1**	**410356**	Ø 272 Brake Disc Thickness [mm] 9.7 Minimum thickness [mm] 8 + S
			→	+PR 1KV; + eFSB		**24.0112-0210.1**	**412210**	Ø 300 Brake Disc Thickness [mm] 12 Minimum thickness [mm] 10 + S
			→	+PR 1KY		**24.0122-0219.1**	**422219**	Ø 310 Brake Disc Thickness [mm] 22 Minimum thickness [mm] 20 Vented
1.2 TSI 1.4 TSI 1.6 TDI 1.6 TDI 4motion 2.0 TDI 2.0 TDI 4motion	63 - 77 90 - 103 66 - 81 77 - 81 81 - 110 110	05/13→ 05/13→ 05/13→03/17 05/13→03/17 04/13→ 04/13→05/18	←	07/13→; +PR 1ZE / 1ZP		**24.0125-0145.1**	**425145**	Ø 288 Brake Disc Thickness [mm] 25 Minimum thickness [mm] 22 Vented + S
			←	07/13→; +PR 1ZA / 1ZB / 1ZD / 1LV		**24.0125-0158.1** **24.0325-0158.1**	**425158** **525158**	Ø 312 Brake Disc Thickness [mm] 25 Minimum thickness [mm] 22 Vented + S Ø 312 Brake Disc Thickness [mm] 25 Minimum thickness [mm] 22 Vented + S
			←	07/13→; +PR 1LM		**24.0130-0225.1**	**430225**	Ø 340 Brake Disc Thickness [mm] 30 Minimum thickness [mm] 27 Vented + S
			→	07/13→; +PR 1KE		**24.0110-0356.1**	**410356**	Ø 272 Brake Disc Thickness [mm] 9.7 Minimum thickness [mm] 8 + S
			→	07/13→; +PR 1KV; + eFSB		**24.0112-0210.1**	**412210**	Ø 300 Brake Disc Thickness [mm] 12 Minimum thickness [mm] 10 + S
			→	07/13→; +PR 1KY		**24.0122-0219.1**	**422219**	Ø 310 Brake Disc Thickness [mm] 22 Minimum thickness [mm] 20 Vented
1.5 TGI	96	12/18→	←	+PR 1ZE / 1ZP		**24.0125-0145.1**	**425145**	Ø 288 Brake Disc Thickness [mm] 25 Minimum thickness [mm] 22 Vented + S
			←	+PR 1ZA / 1ZB / 1ZD / 1LV / 1ZC / 1ZG		**24.0125-0158.1** **24.0325-0158.1**	**425158** **525158**	Ø 312 Brake Disc Thickness [mm] 25 Minimum thickness [mm] 22 Vented + S Ø 312 Brake Disc Thickness [mm] 25 Minimum thickness [mm] 22 Vented + S
			←	+PR 1LJ / 1LM		**24.0130-0225.1**	**430225**	Ø 340 Brake Disc Thickness [mm] 30 Minimum thickness [mm] 27 Vented + S
			→	+PR 1KE / 1KK; + eFSB		**24.0110-0356.1**	**410356**	Ø 272 Brake Disc Thickness [mm] 9.7 Minimum thickness [mm] 8 + S
			→	+PR 1KV; + eFSB		**24.0112-0210.1**	**412210**	Ø 300 Brake Disc Thickness [mm] 12 Minimum thickness [mm] 10 + S
			→	+PR 1KJ / 1KY; + eFSB		**24.0122-0219.1**	**422219**	Ø 310 Brake Disc Thickness [mm] 22 Minimum thickness [mm] 20 Vented

VW - GOLF VII Variant (BA5, BV5) 04/13→

Brake Disc

	kW				! #			
1.6 1.8 TSI 4motion 2.0 R 360S 4motion 2.0 R 4motion	81 132 265 206	05/14→03/17 11/16→ 09/16→ 03/15→03/17	←	+PR 1ZE / 1ZP		**24.0125-0145.1**	**425145**	Ø 288 Brake Disc Thickness [mm] 25 Minimum thickness [mm] 22 Vented + S
			←	+PR 1ZA / 1ZB / 1ZD / 1LV		**24.0125-0158.1**	**425158**	Ø 312 Brake Disc Thickness [mm] 25 Minimum thickness [mm] 22 Vented + S
			←	+PR 1LM		**24.0130-0225.1**	**430225**	Ø 340 Brake Disc Thickness [mm] 30 Minimum thickness [mm] 27 Vented + S
			→	+PR 1KE		**24.0110-0356.1**	**410356**	Ø 272 Brake Disc Thickness [mm] 9.7 Minimum thickness [mm] 8 + S
			→	+PR 1KV; + eFSB		**24.0112-0210.1**	**412210**	Ø 300 Brake Disc Thickness [mm] 12 Minimum thickness [mm] 10 + S
			→	+PR 1KY		**24.0122-0219.1**	**422219**	Ø 310 Brake Disc Thickness [mm] 22 Minimum thickness [mm] 20 Vented
2.0 GTD	135	01/15→03/17	←	+PR 1ZE / 1ZP		**24.0125-0145.1**	**425145**	Ø 288 Brake Disc Thickness [mm] 25 Minimum thickness [mm] 22 Vented + S
			←	+PR 1ZA / 1ZB / 1ZD / 1LV		**24.0125-0158.1** **24.0325-0158.1**	**425158** **525158**	Ø 312 Brake Disc Thickness [mm] 25 Minimum thickness [mm] 22 Vented + S Ø 312 Brake Disc Thickness [mm] 25 Minimum thickness [mm] 22 Vented + S
			←	03/15→; +PR 1LM		**24.0130-0225.1**	**430225**	Ø 340 Brake Disc Thickness [mm] 30 Minimum thickness [mm] 27 Vented + S
			→	+PR 1KE		**24.0110-0356.1**	**410356**	Ø 272 Brake Disc Thickness [mm] 9.7 Minimum thickness [mm] 8 + S
			→	+PR 1KV; + eFSB		**24.0112-0210.1**	**412210**	Ø 300 Brake Disc Thickness [mm] 12 Minimum thickness [mm] 10 + S
			→	+PR 1KY		**24.0122-0219.1**	**422219**	Ø 310 Brake Disc Thickness [mm] 22 Minimum thickness [mm] 20 Vented

Sensor, wheel speed

1.0 TSI	63 - 85	05/15→07/18	←	⊞		**24.0711-5273.3**	**360303**	
1.2 TSI 1.4 TGI CNG 1.4 TSI 1.4 TSI MultiFuel 1.5 TGI 1.5 TSI 1.6 1.6 TDI 1.8 TSI 4motion 2.0 GTD	81 81 92 - 110 90 - 92 96 96 - 110 81 85 132 135	04/14→ 09/13→ 05/14→ 04/13→03/17 12/18→ 04/17→ 05/14→03/17 11/16→ 11/16→ 01/15→03/17	←	⊟		**24.0711-5274.3**	**360304**	
			→	for cruise control system	2	**24.0711-6337.3**	**360390**	
			→	for vehicles with parking assistant system	2	**24.0711-6337.3**	**360390**	
1.0 TSI	81	11/16→	←	01/17→; ⊞		**24.0711-5273.3**	**360303**	
			←	01/17→; ⊟		**24.0711-5274.3**	**360304**	
			→	for vehicles with parking assistant system	2	**24.0711-6337.3**	**360390**	
			→	for cruise control system	2	**24.0711-6337.3**	**360390**	
1.2 TSI 1.4 TSI 1.6 TDI	63 - 77 90 - 103 66 - 81	05/13→ 05/13→ 05/13→03/17	←	07/13→; ⊞		**24.0711-5273.3**	**360303**	
			←	07/13→; ⊟		**24.0711-5274.3**	**360304**	
			→	07/13→; for cruise control system	2	**24.0711-6337.3**	**360390**	
			→	07/13→; for vehicles with parking assistant system	2	**24.0711-6337.3**	**360390**	

© 2022 Continental Aftermarket & Services GmbH

	kW				! #			
VW - GOLF VII Variant (BA5, BV5) 04/13→								
Sensor, wheel speed								
2.0 TDI	81 - 110	04/13→	←	07/13→;		**24.0711-5273.3**	**360303**	
			←	07/13→;		**24.0711-5274.3**	**360304**	
			→	07/13→; for cruise control system	2	**24.0711-6337.3**	**360390**	
			→	07/13→; for vehicles with parking assistant system	2	**24.0711-6337.3**	**360390**	
1.6 TDI 4motion	77 - 81	05/13→03/17	←	07/13→;		**24.0711-5273.3**	**360303**	
2.0 TDI 4motion	110	04/13→05/18	←	07/13→;		**24.0711-5274.3**	**360304**	
			→	07/13→; for vehicles with parking assistant system;		**24.0711-5401.3**	**360330**	
			→	07/13→; for cruise control system;		**24.0711-5401.3**	**360330**	
			→	07/13→; for vehicles with parking assistant system;		**24.0711-5402.3**	**360331**	
			→	07/13→; for cruise control system;		**24.0711-5402.3**	**360331**	
2.0 R 360S 4motion	265	09/16→	←			**24.0711-5273.3**	**360303**	
2.0 R 4motion	206 - 228	03/15→	←			**24.0711-5274.3**	**360304**	
			→	for vehicles with parking assistant system;		**24.0711-5401.3**	**360330**	
			→	for cruise control system;		**24.0711-5401.3**	**360330**	
			→	for cruise control system;		**24.0711-5402.3**	**360331**	
			→	for vehicles with parking assistant system;		**24.0711-5402.3**	**360331**	
Slave Cylinder, clutch								
1.0 TSI	63 - 85	05/15→		+PR 0EC / 0EM		**24.2519-1706.3**	**040096**	Ø 19
1.2 TSI	81	04/14→						
1.4 TGI CNG	81	09/13→						
1.4 TSI	92 - 110	05/14→						
1.4 TSI MultiFuel	90 - 92	04/13→03/17						
1.5 TGI	96	12/18→						
1.5 TSI	96 - 110	04/17→						
1.6	81	05/14→03/17						
1.6 TDI	85	11/16→						
1.8 TSI 4motion	132	11/16→						
2.0 GTD	135	01/15→03/17						
2.0 R 360S 4motion	265	09/16→						
2.0 R 4motion	206 - 228	03/15→						
1.2 TSI	63 - 77	05/13→		07/13→; +PR 0EC / 0EM		**24.2519-1706.3**	**040096**	Ø 19
1.4 TSI	90 - 103	05/13→						
1.6 TDI	66 - 81	05/13→03/17						
1.6 TDI 4motion	77 - 81	05/13→03/17						
2.0 TDI	81 - 110	04/13→						
2.0 TDI 4motion	110	04/13→05/18						
Control Element, parking brake caliper								
1.0 TSI	63 - 85	05/15→	→	+PR 1KE;		**11.9282-1001.3**	**250159**	ATE
			→	+PR 1KE;		**11.9282-1002.3**	**250160**	ATE
1.2 TSI	81	04/14→						
1.4 TGI CNG	81	09/13→						
1.4 TSI	92 - 110	05/14→						
1.4 TSI MultiFuel	90 - 92	04/13→03/17						
1.5 TGI	96	12/18→						
1.5 TSI	96 - 110	04/17→						
1.6	81	05/14→03/17						
1.6 TDI	85	11/16→						
1.8 TSI 4motion	132	11/16→						
2.0 GTD	135	01/15→03/17						
2.0 R 360S 4motion	265	09/16→						
2.0 R 4motion	206 - 228	03/15→						
1.2 TSI	63 - 77	05/13→	→	07/13→; +PR 1KE;		**11.9282-1001.3**	**250159**	ATE

	kW				! #			
VW - GOLF VII Variant (BA5, BV5) 04/13→								
Control Element, parking brake caliper								
1.4 TSI	90 - 103	05/13→	➡	07/13→; +PR 1KE; ⊞		**11.9282-1002.3**	**250160**	ATE
1.6 TDI	66 - 81	05/13→03/17						
1.6 TDI 4motion	77 - 81	05/13→03/17						
2.0 TDI	81 - 110	04/13→						
2.0 TDI 4motion	110	04/13→05/18						
VW - GOLF VIII (CD1) 07/19→								
Brake Caliper								
1.0 eTSI 1.5 eTSI	81 110	06/20→ 12/19→	➡	+PR 1KE / 1KR; ⊞		**24.6238-7047.5**	**241181**	ATE without holder + eFSB
			➡	+PR 1KE / 1KR; ⊞		**24.6238-7048.5**	**241182**	ATE without holder + eFSB
1.0 TSI	66 - 81	02/20→	⬅	+PR 1ZK; ⊞		**24.3571-1801.5**	**241387**	without holder
1.4 GTE Plug-in Hybrid	110 - 180	07/20→	⬅	+PR 1ZK; ⊞		**24.3571-1802.5**	**241388**	without holder
1.5 TGI	96	09/20→						
1.5 TSI	96 - 110	07/19→						
2.0 GTI	180	09/20→						
2.0 GTI Clubsport	221	10/20→						
2.0 TDI	85 - 110	08/19→						
2.0 TDI 4motion	147	09/20→						
2.0 TDI GTD	147	09/20→						
2.0 TSI	140	06/21→						
2.0 TSI 4motion	140	06/21→						
2.0 TSI R 4motion	235	09/20→						
Brake Pad Set, disc brake								
1.0 eTSI 1.5 eTSI	81 110	06/20→ 12/19→	⬅	+PR 1ZE / 1ZJ / 1ZP / 1ZQ		**13.0460-2785.2** **13.0470-2785.2**	**602785** **LD2785**	TRW 25683 20,4 + WE / + WK TRW 25683 20,4 + WE / + WK Ceramic
			➡	+PR 1KE / 1KR / 2EG / 2EJ		**13.0460-7293.2** **13.0470-7293.2**	**607293** **LD7293**	ATE 25008 16,3 - WE / - WK ATE 25008 16,3 - WE / - WK Ceramic
1.0 TSI	66 - 81	02/20→	⬅	+PR 1LG		**13.0460-2617.2** **13.0470-2617.2**	**602617** **LD2617**	TRW + WK TRW + WK Ceramic
1.4 GTE Plug-in Hybrid	110 - 180	07/20→	⬅	+PR 1ZK / 1ZU		**13.0460-2785.2** **13.0470-2785.2**	**602785** **LD2785**	TRW 25683 20,4 + WE / + WK TRW 25683 20,4 + WE / + WK Ceramic
1.5 TGI	96	09/20→						
1.5 TSI	96 - 110	07/19→						
2.0 GTI	180	09/20→						
2.0 GTI Clubsport	221	10/20→						
2.0 TDI	85 - 110	08/19→						
2.0 TDI 4motion	147	09/20→						
2.0 TDI GTD	147	09/20→						
2.0 TSI	140	06/21→						
2.0 TSI 4motion	140	06/21→						
2.0 TSI R 4motion	235	09/20→	⬅	+PR 1LG		**13.0460-2617.2**	**602617**	TRW + WK
			⬅	+PR 1ZK / 1ZU		**13.0460-2785.2**	**602785**	TRW 25683 20,4 + WE / + WK
Warning Contact, brake pad wear								
1.0 TSI	66 - 81	02/20→	⬅		1	**24.8190-0065.2**	**620065**	
1.4 GTE Plug-in Hybrid	110 - 180	07/20→						
1.5 TGI	96	09/20→						
1.5 TSI	96 - 110	07/19→						
2.0 GTI	180	09/20→						
2.0 GTI Clubsport	221	10/20→						
2.0 TDI	85 - 110	08/19→						
2.0 TDI 4motion	147	09/20→						
2.0 TDI GTD	147	09/20→						
2.0 TSI	140	06/21→						
2.0 TSI 4motion	140	06/21→						
2.0 TSI R 4motion	235	09/20→						

© 2022 Continental Aftermarket & Services GmbH

	kW				! #			
VW - GOLF VIII (CD1) 07/19→								
Brake Disc								
1.0 eTSI 1.5 eTSI	81 110	06/20→ 12/19→	←	+PR 1ZE / 1ZJ / 1ZP / 1ZQ		**24.0125-0145.1**	**425145**	Ø 288 Brake Disc Thickness [mm] 25 Minimum thickness [mm] 22 Vented + S
			→	+PR 1KE / 1KJ / 2EG / 2EJ		**24.0110-0356.1**	**410356**	Ø 272 Brake Disc Thickness [mm] 9.7 Minimum thickness [mm] 8 + S
1.0 TSI 1.4 GTE Plug-in Hybrid 1.5 TGI 1.5 TSI 2.0 GTI 2.0 GTI Clubsport 2.0 TDI 2.0 TDI 4motion 2.0 TDI GTD 2.0 TSI 2.0 TSI 4motion 2.0 TSI R 4motion	66 - 81 110 - 180 96 96 - 110 180 221 85 - 110 147 147 140 140 235	02/20→ 07/20→ 09/20→ 07/19→ 09/20→ 10/20→ 08/19→ 09/20→ 09/20→ 06/21→ 06/21→ 09/20→	←	+PR 1ZE		**24.0125-0145.1**	**425145**	Ø 288 Brake Disc Thickness [mm] 25 Minimum thickness [mm] 22 Vented + S
			←	+PR 1ZK / 1ZU		**24.0125-0158.1**	**425158**	Ø 312 Brake Disc Thickness [mm] 25 Minimum thickness [mm] 22 Vented + S
			←	+PR 1LG		**24.0130-0225.1**	**430225**	Ø 340 Brake Disc Thickness [mm] 30 Minimum thickness [mm] 27 Vented + S
			→	+PR 1KE / 2EC / 2EJ		**24.0110-0356.1**	**410356**	Ø 272 Brake Disc Thickness [mm] 9.7 Minimum thickness [mm] 8 + S
			→	+PR 1KF / 1KJ / 1KY / 1KZ		**24.0122-0219.1**	**422219**	Ø 310 Brake Disc Thickness [mm] 22 Minimum thickness [mm] 20 Vented
Sensor, wheel speed								
1.0 eTSI 1.0 TSI 1.5 eTSI 1.5 TSI 2.0 TDI	81 66 - 81 110 96 - 110 85 - 110	06/20→ 02/20→ 12/19→ 07/19→ 08/19→	←	■□		**24.0711-5273.3**	**360303**	
			←	□■		**24.0711-5274.3**	**360304**	
			→	→ 07/20	2	**24.0711-6337.3**	**360390**	
1.4 GTE Plug-in Hybrid 1.5 TGI 2.0 GTI 2.0 GTI Clubsport 2.0 TDI 4motion 2.0 TDI GTD 2.0 TSI 2.0 TSI 4motion 2.0 TSI R 4motion	110 - 180 96 180 221 147 147 140 140 235	07/20→ 09/20→ 09/20→ 10/20→ 09/20→ 09/20→ 06/21→ 06/21→ 09/20→	←	■□		**24.0711-5273.3**	**360303**	
			←	□■		**24.0711-5274.3**	**360304**	
Control Element, parking brake caliper								
1.0 eTSI 1.0 TSI 1.4 GTE Plug-in Hybrid 1.5 eTSI 1.5 TGI 1.5 TSI 2.0 GTI 2.0 GTI Clubsport 2.0 TDI 2.0 TDI 4motion 2.0 TDI GTD 2.0 TSI 2.0 TSI 4motion 2.0 TSI R 4motion	81 66 - 81 110 - 180 110 96 96 - 110 180 221 85 - 110 147 147 140 140 235	06/20→ 02/20→ 07/20→ 12/19→ 09/20→ 07/19→ 09/20→ 10/20→ 08/19→ 09/20→ 09/20→ 06/21→ 06/21→ 09/20→	→	■□		**11.9282-1001.3**	**250159**	ATE
			→	□■		**11.9282-1002.3**	**250160**	ATE
VW - GOLF VIII Variant (CG5) 08/20→								
Brake Caliper								
1.0 eTSI 1.5 eTSI	81 96 - 110	09/20→ 12/20→	→	+PR 1KE / 1KR; ■□		**24.6238-7047.5**	**241181**	ATE without holder + eFSB
			→	+PR 1KE / 1KR; □■		**24.6238-7048.5**	**241182**	ATE without holder + eFSB
1.0 TSI 1.5 TGI 1.5 TSI 2.0 GTI	66 - 81 96 96 - 110 180	08/20→ 09/20→ 08/20→ 09/20→	←	+PR 1ZK; ■□		**24.3571-1801.5**	**241387**	without holder
			←	+PR 1ZK; □■		**24.3571-1802.5**	**241388**	without holder

	kW				! #			
VW - GOLF VIII Variant (CG5) 08/20→								
Brake Caliper								
2.0 TDI	85 - 110	08/20→	←	+PR 1ZK;		**24.3571-1801.5**	**241387**	without holder
2.0 TDI 4motion	147	09/20→	←	+PR 1ZK;		**24.3571-1802.5**	**241388**	without holder
2.0 TSI	140	06/21→						
2.0 TSI 4motion	140	06/21→						
Brake Pad Set, disc brake								
1.0 eTSI	81	09/20→	←	+PR 1ZE / 1ZJ / 1ZP / 1ZQ		**13.0460-2785.2**	**602785**	TRW 25683 20,4 + WE / + WK
1.5 eTSI	96 - 110	12/20→				**13.0470-2785.2**	**LD2785**	TRW 25683 20,4 + WE / + WK Ceramic
			→	+PR 1KE / 1KR / 2EG / 2EJ		**13.0460-7293.2**	**607293**	ATE 25008 16,3 - WE / - WK
						13.0470-7293.2	**LD7293**	ATE 25008 16,3 - WE / - WK Ceramic
1.0 TSI	66 - 81	08/20→	←	+PR 1LG		**13.0460-2617.2**	**602617**	TRW + WK
						13.0470-2617.2	**LD2617**	TRW + WK Ceramic
1.5 TGI	96	09/20→	←	+PR 1ZK / 1ZU		**13.0460-2785.2**	**602785**	TRW 25683 20,4 + WE / + WK
1.5 TSI	96 - 110	08/20→				**13.0470-2785.2**	**LD2785**	TRW 25683 20,4 + WE / + WK Ceramic
2.0 GTI	180	09/20→						
2.0 TDI	85 - 110	08/20→						
2.0 TDI 4motion	147	09/20→						
2.0 TSI	140	06/21→						
2.0 TSI 4motion	140	06/21→						
Warning Contact, brake pad wear								
1.0 TSI	66 - 81	08/20→	←		1	**24.8190-0065.2**	**620065**	
1.5 TGI	96	09/20→						
1.5 TSI	96 - 110	08/20→						
2.0 GTI	180	09/20→						
2.0 TDI	85 - 110	08/20→						
2.0 TDI 4motion	147	09/20→						
2.0 TSI	140	06/21→						
2.0 TSI 4motion	140	06/21→						
Brake Disc								
1.0 eTSI	81	09/20→	←	+PR 1ZE / 1ZJ / 1ZP / 1ZQ		**24.0125-0145.1**	**425145**	Ø 288 Brake Disc Thickness [mm] 25 Minimum thickness [mm] 22 Vented + S
1.5 eTSI	96 - 110	12/20→						
			→	+PR 1KE / 1KJ / 2EG / 2EJ		**24.0110-0356.1**	**410356**	Ø 272 Brake Disc Thickness [mm] 9.7 Minimum thickness [mm] 8 + S
1.0 TSI	66 - 81	08/20→	←	+PR 1ZE		**24.0125-0145.1**	**425145**	Ø 288 Brake Disc Thickness [mm] 25 Minimum thickness [mm] 22 Vented + S
1.5 TGI	96	09/20→						
1.5 TSI	96 - 110	08/20→						
2.0 GTI	180	09/20→	←	+PR 1ZK / 1ZU		**24.0125-0158.1**	**425158**	Ø 312 Brake Disc Thickness [mm] 25 Minimum thickness [mm] 22 Vented + S
2.0 TDI	85 - 110	08/20→						
2.0 TDI 4motion	147	09/20→						
2.0 TSI	140	06/21→	←	+PR 1LG		**24.0130-0225.1**	**430225**	Ø 340 Brake Disc Thickness [mm] 30 Minimum thickness [mm] 27 Vented + S
2.0 TSI 4motion	140	06/21→						
			→	+PR 1KE / 2EC / 2EJ		**24.0110-0356.1**	**410356**	Ø 272 Brake Disc Thickness [mm] 9.7 Minimum thickness [mm] 8 + S
			→	+PR 1KF / 1KJ / 1KY / 1KZ		**24.0122-0219.1**	**422219**	Ø 310 Brake Disc Thickness [mm] 22 Minimum thickness [mm] 20 Vented
Sensor, wheel speed								
1.0 eTSI	81	09/20→	←			**24.0711-5273.3**	**360303**	
1.0 TSI	66 - 81	08/20→	←			**24.0711-5274.3**	**360304**	
1.5 eTSI	96 - 110	12/20→						
1.5 TGI	96	09/20→						
1.5 TSI	96 - 110	08/20→						
2.0 GTI	180	09/20→						
2.0 TDI	85 - 110	08/20→						

© 2022 Continental Aftermarket & Services GmbH

	kW				! #			
VW - GOLF VIII Variant (CG5) 08/20→								
Sensor, wheel speed								
2.0 TDI 4motion	147	09/20→	←			24.0711-5273.3	360303	
2.0 TSI	140	06/21→						
2.0 TSI 4motion	140	06/21→	←			24.0711-5274.3	360304	
Control Element, parking brake caliper								
1.0 eTSI	81	09/20→	→			11.9282-1001.3	250159	ATE
1.0 TSI	66 - 81	08/20→	→			11.9282-1002.3	250160	ATE
1.5 eTSI	96 - 110	12/20→						
1.5 TGI	96	09/20→						
1.5 TSI	96 - 110	08/20→						
2.0 GTI	180	09/20→						
2.0 TDI	85 - 110	08/20→						
2.0 TDI 4motion	147	09/20→						
2.0 TSI	140	06/21→						
2.0 TSI 4motion	140	06/21→						
VW - GOLF ALLTRACK VII Variant (BA5, BV5) 12/14→								
Brake Master Cylinder								
1.6 TDI 4motion	81	12/14→		+PR 1ZA / 1ZD / 1ZE / 1ZF / 1ZP		24.4123-1719.3	011017	TRW Ø 23.8
1.8 TSI 4motion	132	12/14→						without brake fluid reservoir
2.0 TDI 4motion	110 - 135	12/14→						
Brake Caliper								
1.6 TDI 4motion	81	12/14→	←	+PR 1ZA / 1ZD;		24.3571-1801.5	241387	without holder
1.8 TSI 4motion	132	12/14→						
2.0 TDI 4motion	110 - 135	12/14→	←	+PR 1ZA / 1ZD;		24.3571-1802.5	241388	without holder
			→	+PR 1KE;		24.6238-7023.5	241241	ATE without holder + eFSB
						24.6238-7047.5	241181	ATE without holder + eFSB
			→	+PR 1KE;		24.6238-7024.5	241242	ATE without holder + eFSB
						24.6238-7048.5	241182	ATE without holder + eFSB
Brake Pad Set, disc brake								
1.6 TDI 4motion	81	12/14→	←	+PR 1LM		13.0460-2617.2	602617	TRW + WK
1.8 TSI 4motion	132	12/14→				13.0470-2617.2	LD2617	TRW + WK Ceramic
2.0 TDI 4motion	110 - 135	12/14→	←	+PR 1ZA / 1ZB / 1ZD / 1ZE / 1ZP / 1LV		13.0460-2785.2	602785	TRW 25683 20,4 + WE / + WK
						13.0470-2785.2	LD2785	TRW 25683 20,4 + WE / + WK Ceramic
			→	+PR 1KE; + eFSB		13.0460-7293.2	607293	ATE 25008 16,3 - WE / - WK
						13.0470-7293.2	LD7293	ATE 25008 16,3 - WE / - WK Ceramic
			→	+PR 1KV / 1KY; + eFSB		13.0460-7294.2	607294	ATE 25009 16,4 - WE / - WK
						13.0470-7294.2	LD7294	ATE 25009 16,4 - WE / - WK Ceramic
Brake Disc								
1.6 TDI 4motion	81	12/14→	←	+PR 1ZE / 1ZP		24.0125-0145.1	425145	Ø 288
1.8 TSI 4motion	132	12/14→						Brake Disc Thickness [mm] 25
2.0 TDI 4motion	110 - 135	12/14→						Minimum thickness [mm] 22
								Vented + S
			←	+PR 1ZA / 1ZB / 1ZD / 1LV		24.0125-0158.1	425158	Ø 312
								Brake Disc Thickness [mm] 25
								Minimum thickness [mm] 22
								Vented + S
						24.0325-0158.1	525158	Ø 312
								Brake Disc Thickness [mm] 25
								Minimum thickness [mm] 22
								Vented + S
			←	+PR 1LM		24.0130-0225.1	430225	Ø 340
								Brake Disc Thickness [mm] 30
								Minimum thickness [mm] 27
								Vented + S
			→	+PR 1KE		24.0110-0356.1	410356	Ø 272
								Brake Disc Thickness [mm] 9.7
								Minimum thickness [mm] 8 + S
			→	+PR 1KV; + eFSB		24.0112-0210.1	412210	Ø 300
								Brake Disc Thickness [mm] 12
								Minimum thickness [mm] 10 + S

© 2022 Continental Aftermarket & Services GmbH

	kW				! #			
VW - GOLF ALLTRACK VII Variant (BA5, BV5) 12/14→								
Brake Disc								
1.6 TDI 4motion 1.8 TSI 4motion 2.0 TDI 4motion	81 132 110 - 135	12/14→ 12/14→ 12/14→	→	+PR 1KY		**24.0122-0219.1**	**422219**	Ø 310 Brake Disc Thickness [mm] 22 Minimum thickness [mm] 20 Vented
Sensor, wheel speed								
1.6 TDI 4motion 1.8 TSI 4motion 2.0 TDI 4motion	81 132 110 - 135	12/14→ 12/14→ 12/14→	←			**24.0711-5273.3**	**360303**	
			←			**24.0711-5274.3**	**360304**	
			→	for vehicles with parking assistant system;		**24.0711-5401.3**	**360330**	
			→	for cruise control system;		**24.0711-5401.3**	**360330**	
			→	for cruise control system;		**24.0711-5402.3**	**360331**	
			→	for vehicles with parking assistant system;		**24.0711-5402.3**	**360331**	
Slave Cylinder, clutch								
1.6 TDI 4motion 1.8 TSI 4motion 2.0 TDI 4motion	81 132 110 - 135	12/14→ 12/14→ 12/14→		+PR 0EC / 0EM		**24.2519-1706.3**	**040096**	Ø 19
Control Element, parking brake caliper								
1.6 TDI 4motion 1.8 TSI 4motion 2.0 TDI 4motion	81 132 110 - 135	12/14→ 12/14→ 12/14→	→	+PR 1KE;		**11.9282-1001.3**	**250159**	ATE
			→	+PR 1KE;		**11.9282-1002.3**	**250160**	ATE
VW - GOLF ALLTRACK VIII (CG5) 11/20→								
Brake Caliper								
2.0 TDI 4motion	147	11/20→	←	+PR 1ZK;		**24.3571-1801.5**	**241387**	without holder
			←	+PR 1ZK;		**24.3571-1802.5**	**241388**	without holder
Brake Pad Set, disc brake								
2.0 TDI 4motion	147	11/20→	←	+PR 1LG		**13.0460-2617.2** **13.0470-2617.2**	**602617** **LD2617**	TRW + WK TRW + WK Ceramic
			←	+PR 1ZK / 1ZU		**13.0460-2785.2** **13.0470-2785.2**	**602785** **LD2785**	TRW 25683 20,4 + WE / + WK TRW 25683 20,4 + WE / + WK Ceramic
Warning Contact, brake pad wear								
2.0 TDI 4motion	147	11/20→	←		1	**24.8190-0065.2**	**620065**	
Brake Disc								
2.0 TDI 4motion	147	11/20→	←	+PR 1ZE		**24.0125-0145.1**	**425145**	Ø 288 Brake Disc Thickness [mm] 25 Minimum thickness [mm] 22 Vented + S
			←	+PR 1ZK / 1ZU		**24.0125-0158.1**	**425158**	Ø 312 Brake Disc Thickness [mm] 25 Minimum thickness [mm] 22 Vented + S
			←	+PR 1LG		**24.0130-0225.1**	**430225**	Ø 340 Brake Disc Thickness [mm] 30 Minimum thickness [mm] 27 Vented + S
			→	+PR 1KE / 2EC / 2EJ		**24.0110-0356.1**	**410356**	Ø 272 Brake Disc Thickness [mm] 9.7 Minimum thickness [mm] 8 + S
			→	+PR 1KF / 1KJ / 1KY / 1KZ		**24.0122-0219.1**	**422219**	Ø 310 Brake Disc Thickness [mm] 22 Minimum thickness [mm] 20 Vented
Sensor, wheel speed								
2.0 TDI 4motion	147	11/20→	←			**24.0711-5273.3**	**360303**	
			←			**24.0711-5274.3**	**360304**	
Control Element, parking brake caliper								
2.0 TDI 4motion	147	11/20→	→			**11.9282-1001.3**	**250159**	ATE

© 2022 Continental Aftermarket & Services GmbH

	kW				! #			
VW - GOLF ALLTRACK VIII (CG5) 11/20→								
Control Element, parking brake caliper								
2.0 TDI 4motion	147	11/20→	➡			**11.9282-1002.3**	**250160**	ATE
VW - GOLF Hatchback Van (1K1) 07/03→								
Guide Bolt, brake caliper								
TDI	77	11/03→02/06		+PR 1LL / 1LV	2	**11.8171-0008.1**	**990049**	ATE
				+PR 1LK / 1LM	2	**11.8171-0008.1**	**990049**	ATE
				+PR 1ZE / 1ZP	2	**11.8171-0008.1**	**990049**	ATE
				+PR 1LJ / 1ZD	2	**11.8171-0008.1**	**990049**	ATE
Brake Disc								
TDI	77	11/03→02/06	⬅	+PR 1ZE / 1ZP		**24.0125-0145.1**	**425145**	Ø 288 Brake Disc Thickness [mm] 25 Minimum thickness [mm] 22 Vented + S
			⬅	+PR 1LJ / 1LL / 1LV / 1ZD		**24.0125-0158.1**	**425158**	Ø 312 Brake Disc Thickness [mm] 25 Minimum thickness [mm] 22 Vented + S
						24.0325-0158.1	**525158**	Ø 312 Brake Disc Thickness [mm] 25 Minimum thickness [mm] 22 Vented + S
VW - GOLF PLUS V (5M1, 521) 12/04→12/13								
Guide Bolt, brake caliper								
1.2 TSI	63 - 77	11/09→12/13		+PR 1ZE / 1ZP	2	**11.8171-0008.1**	**990049**	ATE
1.4 16V	55 - 59	01/05→12/13		+PR 1LJ / 1ZA	2	**11.8171-0008.1**	**990049**	ATE
1.4 FSI	66	07/05→11/06						
1.4 TSI	90 - 125	05/06→12/13						
1.6	75	05/05→12/13						
1.6 BiFuel	75	05/09→12/13						
1.6 FSI	85	12/04→05/08						
1.6 MultiFuel	75	11/07→12/13						
1.6 TDI	66 - 77	02/09→12/13						
1.9 TDI	66 - 77	01/05→01/09						
2.0 FSI	110	05/05→06/08						
2.0 TDI	81 - 103	05/05→12/13						
2.0 TDI 16V	103	01/05→12/13						
Brake Disc								
1.2 TSI	63 - 77	11/09→12/13	⬅	+PR 1ZE / 1ZP		**24.0125-0145.1**	**425145**	Ø 288 Brake Disc Thickness [mm] 25 Minimum thickness [mm] 22 Vented + S
1.4 16V	55 - 59	01/05→12/13						
1.4 FSI	66	07/05→11/06	⬅	+PR 1LJ / 1ZA		**24.0125-0158.1**	**425158**	Ø 312 Brake Disc Thickness [mm] 25 Minimum thickness [mm] 22 Vented + S
1.4 TSI	90 - 125	05/06→12/13						
1.6	75	05/05→12/13						
1.6 BiFuel	75	05/09→12/13						
1.6 FSI	85	12/04→05/08				**24.0325-0158.1**	**525158**	Ø 312 Brake Disc Thickness [mm] 25 Minimum thickness [mm] 22 Vented + S
1.6 MultiFuel	75	11/07→12/13						
1.6 TDI	66 - 77	02/09→12/13						
1.9 TDI	66 - 77	01/05→01/09						
2.0 FSI	110	05/05→06/08						
2.0 TDI	81 - 103	05/05→12/13						
2.0 TDI 16V	103	01/05→12/13						
Slave Cylinder, clutch								
1.2 TSI	63 - 77	11/09→12/13		+PR 0EM		**24.2519-1706.3**	**040096**	Ø 19
1.4 16V	55 - 59	01/05→12/13						
1.4 FSI	66	07/05→11/06						
1.4 TSI	90 - 125	05/06→12/13						
1.6	75	05/05→12/13						
1.6 BiFuel	75	05/09→12/13						
1.6 FSI	85	12/04→05/08						
1.6 MultiFuel	75	11/07→12/13						

	kW				! #			
VW - GOLF PLUS V (5M1, 521) 12/04→12/13								
Slave Cylinder, clutch								
1.6 TDI	66 - 77	02/09→12/13		+PR 0EM		**24.2519-1706.3**	**040096**	Ø 19
1.9 TDI	66 - 77	01/05→01/09						
2.0 FSI	110	05/05→06/08						
2.0 TDI	81 - 103	05/05→12/13						
2.0 TDI 16V	103	01/05→12/13						
VW - GOLF PLUS Van (521) 01/09→08/14								
Guide Bolt, brake caliper								
1.2 TSi	77	11/09→08/14		+PR 1LJ / 1ZA	2	**11.8171-0008.1**	**990049**	ATE
1.4 TSi	90 - 118	01/09→08/14		+PR 1ZE / 1ZP	2	**11.8171-0008.1**	**990049**	ATE
1.6 TDi	66 - 77	02/09→08/14						
2.0 TDi	103	11/09→08/14						
Brake Disc								
1.2 TSi	77	11/09→08/14	←	+PR 1ZE / 1ZP		**24.0125-0145.1**	**425145**	Ø 288 Brake Disc Thickness [mm] 25 Minimum thickness [mm] 22 Vented + S
1.4 TSi	90 - 118	01/09→08/14						
1.6 TDi	66 - 77	02/09→08/14						
2.0 TDi	103	11/09→08/14	←	+PR 1LJ / 1ZA		**24.0125-0158.1**	**425158**	Ø 312 Brake Disc Thickness [mm] 25 Minimum thickness [mm] 22 Vented + S
Slave Cylinder, clutch								
1.2 TSi	77	11/09→08/14		+PR 0EM		**24.2519-1706.3**	**040096**	Ø 19
1.4 TSi	90 - 118	01/09→08/14						
1.6 TDi	66 - 77	02/09→08/14						
2.0 TDi	103	11/09→08/14						
VW - GOLF SPORTSVAN VII (AM1, AN1) 02/14→								
Brake Master Cylinder								
1.0 TSI	63 - 85	05/15→		for left-hand drive vehicles		**24.4123-1719.3**	**011017**	TRW Ø 23.8 without brake fluid reservoir
1.2 TSI	63 - 81	04/14→						
1.4 TSI	92	04/14→						
1.4 TSI MultiFuel	92	04/14→						
1.5 TSI	96 - 110	05/17→						
1.6	81	05/14→						
1.6 TDI	66 - 85	02/14→						
2.0 TDI	81	05/14→11/17						
1.4 TSI	110	02/14→		05/14→; for left-hand drive vehicles		**24.4123-1719.3**	**011017**	TRW Ø 23.8 without brake fluid reservoir
1.6 TDI	81	02/14→						
2.0 TDI	110	02/14→						
Brake Caliper								
1.0 TSI	63 - 85	05/15→	←	+PR 1ZA; ◪		**24.3571-1801.5**	**241387**	without holder
1.2 TSI	63 - 81	04/14→	←	+PR 1ZA; ◩		**24.3571-1802.5**	**241388**	without holder
1.4 TSI	92	04/14→	→	+PR 1KE; ◪		**24.6238-7023.5** **24.6238-7047.5**	**241241** **241181**	ATE without holder + eFSB ATE without holder + eFSB
1.4 TSI MultiFuel	92	04/14→						
1.5 TSI	96 - 110	05/17→	→	+PR 1KE; ◩		**24.6238-7024.5** **24.6238-7048.5**	**241242** **241182**	ATE without holder + eFSB ATE without holder + eFSB
1.6	81	05/14→						
1.6 TDI	66 - 85	02/14→						
2.0 TDI	81	05/14→11/17						
1.4 TSI	110	02/14→	←	05/14→; +PR 1ZA; ◪		**24.3571-1801.5**	**241387**	without holder
1.6 TDI	81	02/14→						
2.0 TDI	110	02/14→	←	05/14→; +PR 1ZA; ◩		**24.3571-1802.5**	**241388**	without holder
			→	05/14→; +PR 1KE; ◪		**24.6238-7023.5** **24.6238-7047.5**	**241241** **241181**	ATE without holder + eFSB ATE without holder + eFSB
			→	05/14→; +PR 1KE; ◩		**24.6238-7024.5** **24.6238-7048.5**	**241242** **241182**	ATE without holder + eFSB ATE without holder + eFSB
Brake Pad Set, disc brake								
1.0 TSI	63 - 85	05/15→	←	+PR 1ZA / 1ZE / 1ZP		**13.0460-2785.2**	**602785**	TRW 25683 20,4 + WE / + WK

© 2022 Continental Aftermarket & Services GmbH

VW - GOLF SPORTSVAN VII (AM1, AN1) 02/14→

Brake Pad Set, disc brake

	kW				! #			
1.2 TSI	63 - 81	04/14→	←	+PR 1ZA / 1ZE / 1ZP		**13.0470-2785.2**	**LD2785**	TRW 25683 20,4 + WE / + WK Ceramic
1.4 TSI	92	04/14→	→	+PR 1KE; + eFSB		**13.0460-7293.2**	**607293**	ATE 25008 16,3 - WE / - WK
1.4 TSI MultiFuel	92	04/14→				**13.0470-7293.2**	**LD7293**	ATE 25008 16,3 - WE / - WK Ceramic
1.5 TSI	96 - 110	05/17→						
1.6	81	05/14→						
1.6 TDI	66	02/14→						
2.0 TDI	81	05/14→11/17						
1.4 TSI	110	02/14→	←	05/14→; +PR 1ZA / 1ZE / 1ZP		**13.0460-2785.2**	**602785**	TRW 25683 20,4 + WE / + WK
1.6 TDI	81	02/14→				**13.0470-2785.2**	**LD2785**	TRW 25683 20,4 + WE / + WK Ceramic
2.0 TDI	110	02/14→						
			→	05/14→; +PR 1KE; + eFSB		**13.0460-7293.2**	**607293**	ATE 25008 16,3 - WE / - WK
						13.0470-7293.2	**LD7293**	ATE 25008 16,3 - WE / - WK Ceramic
1.6 TDI	85	11/16→	←	+PR 1ZA / 1ZE		**13.0460-2785.2**	**602785**	TRW 25683 20,4 + WE / + WK
						13.0470-2785.2	**LD2785**	TRW 25683 20,4 + WE / + WK Ceramic
			→	+ eFSB		**13.0460-7293.2**	**607293**	ATE 25008 16,3 - WE / - WK
						13.0470-7293.2	**LD7293**	ATE 25008 16,3 - WE / - WK Ceramic

Brake Disc

1.0 TSI	63 - 85	05/15→	←	+PR 1ZE / 1ZP		**24.0125-0145.1**	**425145**	Ø 288 Brake Disc Thickness [mm] 25 Minimum thickness [mm] 22 Vented + S
1.2 TSI	63 - 81	04/14→						
1.4 TSI	92	04/14→	←	+PR 1ZA		**24.0125-0158.1**	**425158**	Ø 312 Brake Disc Thickness [mm] 25 Minimum thickness [mm] 22 Vented + S
1.4 TSI MultiFuel	92	04/14→						
1.5 TSI	96 - 110	05/17→						
1.6 TDI	66	02/14→						
2.0 TDI	81	05/14→11/17				**24.0325-0158.1**	**525158**	Ø 312 Brake Disc Thickness [mm] 25 Minimum thickness [mm] 22 Vented + S
			→	+PR 1KE		**24.0110-0356.1**	**410356**	Ø 272 Brake Disc Thickness [mm] 9.7 Minimum thickness [mm] 8 + S
1.4 TSI	110	02/14→	←	05/14→; +PR 1ZE / 1ZP		**24.0125-0145.1**	**425145**	Ø 288 Brake Disc Thickness [mm] 25 Minimum thickness [mm] 22 Vented + S
1.6 TDI	81	02/14→						
2.0 TDI	110	02/14→						
			←	05/14→; +PR 1ZA		**24.0125-0158.1**	**425158**	Ø 312 Brake Disc Thickness [mm] 25 Minimum thickness [mm] 22 Vented + S
						24.0325-0158.1	**525158**	Ø 312 Brake Disc Thickness [mm] 25 Minimum thickness [mm] 22 Vented + S
			→	05/14→; +PR 1KE		**24.0110-0356.1**	**410356**	Ø 272 Brake Disc Thickness [mm] 9.7 Minimum thickness [mm] 8 + S
1.6	81	05/14→	←	+PR 1ZE / 1ZP		**24.0125-0145.1**	**425145**	Ø 288 Brake Disc Thickness [mm] 25 Minimum thickness [mm] 22 Vented + S
			←	+PR 1ZA		**24.0125-0158.1**	**425158**	Ø 312 Brake Disc Thickness [mm] 25 Minimum thickness [mm] 22 Vented + S
			→	+PR 1KE		**24.0110-0356.1**	**410356**	Ø 272 Brake Disc Thickness [mm] 9.7 Minimum thickness [mm] 8 + S
1.6 TDI	85	11/16→	←	+PR 1ZE		**24.0125-0145.1**	**425145**	Ø 288 Brake Disc Thickness [mm] 25 Minimum thickness [mm] 22 Vented + S
			←	+PR 1ZA		**24.0125-0158.1**	**425158**	Ø 312 Brake Disc Thickness [mm] 25 Minimum thickness [mm] 22 Vented + S
						24.0325-0158.1	**525158**	Ø 312 Brake Disc Thickness [mm] 25 Minimum thickness [mm] 22 Vented + S

© 2022 Continental Aftermarket & Services GmbH

	kW				! #			
VW - GOLF SPORTSVAN VII (AM1, AN1) 02/14→								
Brake Disc								
1.6 TDI	85	11/16→	➡	+PR 1KE		**24.0110-0356.1**	**410356**	Ø 272 Brake Disc Thickness [mm] 9.7 Minimum thickness [mm] 8 + S
Sensor, wheel speed								
1.0 TSI	63 - 85	05/15→	⬅			**24.0711-5273.3**	**360303**	
1.2 TSI	63 - 81	04/14→	⬅			**24.0711-5274.3**	**360304**	
1.4 TSI	92	04/14→	➡	for cruise control system	2	**24.0711-6337.3**	**360390**	
1.4 TSI MultiFuel	92	04/14→	➡	for vehicles with parking assistant system	2	**24.0711-6337.3**	**360390**	
1.5 TSI	96 - 110	05/17→						
1.6	81	05/14→						
1.6 TDI	66 - 85	02/14→						
2.0 TDI	81	05/14→11/17						
1.4 TSI	110	02/14→	⬅	05/14→;		**24.0711-5273.3**	**360303**	
1.6 TDI	81	02/14→						
2.0 TDI	110	02/14→	⬅	05/14→;		**24.0711-5274.3**	**360304**	
			➡	05/14→; for cruise control system	2	**24.0711-6337.3**	**360390**	
			➡	05/14→; for vehicles with parking assistant system	2	**24.0711-6337.3**	**360390**	
Slave Cylinder, clutch								
1.0 TSI	63 - 85	05/15→		+PR 0EC / 0EM / 0EN		**24.2519-1706.3**	**040096**	Ø 19
1.2 TSI	63 - 81	04/14→						
1.4 TSI	92	04/14→						
1.4 TSI MultiFuel	92	04/14→						
1.5 TSI	96 - 110	05/17→						
1.6	81	05/14→						
1.6 TDI	66 - 85	02/14→						
2.0 TDI	81	05/14→11/17						
1.4 TSI	110	02/14→		05/14→; +PR 0EC / 0EM / 0EN		**24.2519-1706.3**	**040096**	Ø 19
1.6 TDI	81	02/14→						
2.0 TDI	110	02/14→						
Control Element, parking brake caliper								
1.0 TSI	63 - 85	05/15→	➡	+PR 1KE;		**11.9282-1001.3**	**250159**	ATE
1.2 TSI	63 - 81	04/14→	➡	+PR 1KE;		**11.9282-1002.3**	**250160**	ATE
1.4 TSI	92	04/14→						
1.4 TSI MultiFuel	92	04/14→						
1.5 TSI	96 - 110	05/17→						
1.6	81	05/14→						
1.6 TDI	66 - 85	02/14→						
2.0 TDI	81	05/14→11/17						
1.4 TSI	110	02/14→	➡	05/14→; +PR 1KE;		**11.9282-1001.3**	**250159**	ATE
1.6 TDI	81	02/14→						
2.0 TDI	110	02/14→	➡	05/14→; +PR 1KE;		**11.9282-1002.3**	**250160**	ATE
VW - GOLF VAN IV Variant (1J5) 05/99→06/06								
Guide Bolt, brake caliper								
1.9 TDI	96	04/01→05/06	⬅	→ 10/03; +PR 1LE / 1LN / 1ZE / 1ZH	2	**11.8171-0008.1**	**990049**	ATE
Brake Disc								
1.4	55	05/00→06/06	➡	→ 10/03; +PR 1KK / 1KS / 1KV / 1KQ / 1KW		**24.0109-0123.1**	**409123**	Ø 230 Brake Disc Thickness [mm] 9 Minimum thickness [mm] 7 + S
1.6	77	05/00→06/06						
1.9 SDI	50	05/99→05/06						
1.9 TDI	81 - 96	05/99→05/06						
1.9 TDI	66	05/99→05/06	➡	+PR 1KP / 1KT		**24.0109-0123.1**	**409123**	Ø 230 Brake Disc Thickness [mm] 9 Minimum thickness [mm] 7 + S
1.9 TDI	74 - 85	05/99→06/06	➡	+PR 1KK / 1KS / 1KV / 1KQ / 1KW		**24.0109-0123.1**	**409123**	Ø 230 Brake Disc Thickness [mm] 9 Minimum thickness [mm] 7 + S

© 2022 Continental Aftermarket & Services GmbH

	kW				! #			
VW - GOLF VAN VI Variant (AJ5) 07/09→05/14								
Guide Bolt, brake caliper								
1.2 TSi 1.4 TSi 1.6 TDi 1.6 TDi BlueMotion 2.0 TDi	77 90 - 118 66 77 103	09/09→05/14 07/09→05/14 12/09→10/12 07/09→05/14 07/09→05/14		+PR 1LJ / 1ZA / 1ZD / 1ZE / 1ZP	2	**11.8171-0008.1**	**990049**	ATE
Brake Disc								
1.2 TSi 1.4 TSi 1.6 TDi 1.6 TDi BlueMotion 2.0 TDi	77 90 - 118 66 77 103	09/09→05/14 07/09→05/14 12/09→10/12 07/09→05/14 07/09→05/14	←	+PR 1ZE / 1ZP		**24.0125-0145.1**	**425145**	Ø 288 Brake Disc Thickness [mm] 25 Minimum thickness [mm] 22 Vented + S
			←	+PR 1LJ / 1ZA / 1ZD		**24.0125-0158.1**	**425158**	Ø 312 Brake Disc Thickness [mm] 25 Minimum thickness [mm] 22 Vented + S
			→	+PR 1KS		**24.0110-0356.1**	**410356**	Ø 272 Brake Disc Thickness [mm] 9.7 Minimum thickness [mm] 8 + S
Brake Hose								
1.2 TSi 1.4 TSi 1.6 TDi 1.6 TDi BlueMotion 2.0 TDi	77 90 - 118 66 77 103	09/09→05/14 07/09→05/14 12/09→10/12 07/09→05/14 07/09→05/14	←	12/11→	2	**24.5143-0584.3**	**331540**	L= 584
Slave Cylinder, clutch								
1.2 TSi 1.4 TSi 1.6 TDi 1.6 TDi BlueMotion 2.0 TDi	77 90 - 118 66 77 103	09/09→05/14 07/09→05/14 12/09→10/12 07/09→05/14 07/09→05/14		+PR 0EM		**24.2519-1706.3**	**040096**	Ø 19
VW - GOLF VAN VII Variant (BA5) 04/13→03/17								
Brake Master Cylinder								
1.2 TSi BlueMotion 1.4 TSi BlueMotion 1.6 TDi BlueMotion 1.6 TDi BlueMotion 4motion 2.0 TDi BlueMotion 2.0 TDi BlueMotion 4motion	63 - 77 90 - 103 66 - 81 77 110 110	04/13→03/17 05/13→03/17 05/13→03/17 05/13→03/17 04/13→03/17 04/13→03/17		for left-hand drive vehicles; +PR 1ZA / 1ZD / 1ZE / 1ZF / 1ZP		**24.4123-1719.3**	**011017**	TRW Ø 23.8 without brake fluid reservoir
Brake Caliper								
1.2 TSi BlueMotion 1.4 TSi BlueMotion 1.6 TDi BlueMotion 1.6 TDi BlueMotion 4motion 2.0 TDi BlueMotion 2.0 TDi BlueMotion 4motion	63 - 77 90 - 103 66 - 81 77 110 110	04/13→03/17 05/13→03/17 05/13→03/17 05/13→03/17 04/13→03/17 04/13→03/17	←	+PR 1ZA / 1ZD; ◪		**24.3571-1801.5**	**241387**	without holder
			←	+PR 1ZA / 1ZD; ◩		**24.3571-1802.5**	**241388**	without holder
			→	+PR 1KE; + eFSB; ◪		**24.6238-7023.5** **24.6238-7047.5**	**241241** **241181**	ATE without holder + eFSB ATE without holder + eFSB
			→	+PR 1KK; + eFSB; ◪		**24.6238-7023.5** **24.6238-7047.5**	**241241** **241181**	ATE without holder + eFSB ATE without holder + eFSB
			→	+PR 1KE; + eFSB; ◩		**24.6238-7024.5** **24.6238-7048.5**	**241242** **241182**	ATE without holder + eFSB ATE without holder + eFSB
			→	+PR 1KK; + eFSB; ◩		**24.6238-7024.5** **24.6238-7048.5**	**241242** **241182**	ATE without holder + eFSB ATE without holder + eFSB
			→	+PR 1KJ; + eFSB; ◪		**24.6242-7017.5**	**241185**	ATE without holder + eFSB
			→	+PR 1KJ; + eFSB; ◩		**24.6242-7018.5**	**241186**	ATE without holder + eFSB
Brake Pad Set, disc brake								
1.2 TSi BlueMotion 1.4 TSi BlueMotion 1.6 TDi BlueMotion 1.6 TDi BlueMotion 4motion 2.0 TDi BlueMotion	63 - 77 90 - 103 66 - 81 77 110	04/13→03/17 05/13→03/17 05/13→03/17 05/13→03/17 04/13→03/17	←	+PR 1LJ / 1LM		**13.0460-2617.2** **13.0470-2617.2**	**602617** **LD2617**	TRW + WK TRW + WK Ceramic
			←	+PR 1ZA / 1ZB / 1ZD / 1ZE / 1ZP / 1LV / 1ZC / 1ZG		**13.0460-2785.2** **13.0470-2785.2**	**602785** **LD2785**	TRW 25683 20,4 + WE / + WK TRW 25683 20,4 + WE / + WK Ceramic
			→	+PR 1KE / 1KK; + eFSB		**13.0460-7293.2**	**607293**	ATE 25008 16,3 - WE / - WK

VW - GOLF VAN VII Variant (BA5) 04/13→03/17

	kW				! #			
Brake Pad Set, disc brake								
2.0 TDi BlueMotion 4motion	110	04/13→03/17	➡	+PR 1KE / 1KK; + eFSB		**13.0470-7293.2**	**LD7293**	ATE 25008 16,3 - WE / - WK Ceramic
			➡	+PR 1KJ / 1KV / 1KY; + eFSB		**13.0460-7294.2**	**607294**	ATE 25009 16,4 - WE / - WK
						13.0470-7294.2	**LD7294**	ATE 25009 16,4 - WE / - WK Ceramic
Warning Contact, brake pad wear								
1.2 TSi BlueMotion	63 - 77	04/13→03/17	⬅	+PR 1LJ / 1LM	1	**24.8190-0065.2**	**620065**	
1.4 TSi BlueMotion	90 - 103	05/13→03/17						
1.6 TDi BlueMotion	66 - 81	05/13→03/17						
1.6 TDi BlueMotion 4motion	77	05/13→03/17						
2.0 TDi BlueMotion	110	04/13→03/17						
2.0 TDi BlueMotion 4motion	110	04/13→03/17						
Brake Disc								
1.2 TSi BlueMotion	63 - 77	04/13→03/17	⬅	+PR 1ZE / 1ZP		**24.0125-0145.1**	**425145**	Ø 288 Brake Disc Thickness [mm] 25 Minimum thickness [mm] 22 Vented + S
1.4 TSi BlueMotion	90 - 103	05/13→03/17						
1.6 TDi BlueMotion	66 - 81	05/13→03/17	⬅	+PR 1ZA / 1ZB / 1ZD / 1LV / 1ZC / 1ZG		**24.0125-0158.1**	**425158**	Ø 312 Brake Disc Thickness [mm] 25 Minimum thickness [mm] 22 Vented + S
1.6 TDi BlueMotion 4motion	77	05/13→03/17						
2.0 TDi BlueMotion	110	04/13→03/17						
2.0 TDi BlueMotion 4motion	110	04/13→03/17	⬅	+PR 1LJ / 1LM		**24.0130-0225.1**	**430225**	Ø 340 Brake Disc Thickness [mm] 30 Minimum thickness [mm] 27 Vented + S
			➡	+PR 1KE / 1KK; + eFSB		**24.0110-0356.1**	**410356**	Ø 272 Brake Disc Thickness [mm] 9.7 Minimum thickness [mm] 8 + S
			➡	+PR 1KV; + eFSB		**24.0112-0210.1**	**412210**	Ø 300 Brake Disc Thickness [mm] 12 Minimum thickness [mm] 10 + S
			➡	+PR 1KJ / 1KY; + eFSB		**24.0122-0219.1**	**422219**	Ø 310 Brake Disc Thickness [mm] 22 Minimum thickness [mm] 20 Vented
Sensor, wheel speed								
1.2 TSi BlueMotion	63 - 77	04/13→03/17	⬅	◪		**24.0711-5273.3**	**360303**	
1.4 TSi BlueMotion	90 - 103	05/13→03/17	⬅	◪		**24.0711-5274.3**	**360304**	
1.6 TDi BlueMotion	66 - 77	05/13→03/17	➡	for cruise control system	2	**24.0711-6337.3**	**360390**	
1.6 TDi BlueMotion 4motion	77	05/13→03/17	➡	for vehicles with parking assistant system	2	**24.0711-6337.3**	**360390**	
2.0 TDi BlueMotion	110	04/13→03/17						
2.0 TDi BlueMotion 4motion	110	04/13→03/17						
1.6 TDi BlueMotion	81	05/13→03/17	⬅	◪		**24.0711-5273.3**	**360303**	
			⬅	◪		**24.0711-5274.3**	**360304**	
			➡	for vehicles with parking assistant system; ◪		**24.0711-5401.3**	**360330**	
			➡	for cruise control system; ◪		**24.0711-5401.3**	**360330**	
			➡	for cruise control system; ◪		**24.0711-5402.3**	**360331**	
			➡	for vehicles with parking assistant system; ◪		**24.0711-5402.3**	**360331**	
Slave Cylinder, clutch								
1.2 TSi BlueMotion	63 - 77	04/13→03/17		+PR 0EC / 0EM		**24.2519-1706.3**	**040096**	Ø 19
1.4 TSi BlueMotion	90 - 103	05/13→03/17						
1.6 TDi BlueMotion	66 - 81	05/13→03/17						
1.6 TDi BlueMotion 4motion	77	05/13→03/17						
2.0 TDi BlueMotion	110	04/13→03/17						
2.0 TDi BlueMotion 4motion	110	04/13→03/17						

© 2022 Continental Aftermarket & Services GmbH

	kW				! #			
VW - GOLF VAN VII Variant (BA5) 04/13→03/17								
Control Element, parking brake caliper								
1.2 TSi BlueMotion	63 - 77	04/13→03/17	➡	+PR 1KE;		**11.9282-1001.3**	**250159**	ATE
1.4 TSi BlueMotion	90 - 103	05/13→03/17	➡	+PR 1KE;		**11.9282-1002.3**	**250160**	ATE
1.6 TDi BlueMotion	66 - 81	05/13→03/17						
1.6 TDi BlueMotion 4motion	77	05/13→03/17						
2.0 TDi BlueMotion	110	04/13→03/17						
2.0 TDi BlueMotion 4motion	110	04/13→03/17						
VW - GRAND CALIFORNIA Camper (SCB, SCC) 04/19→								
Brake Pad Set, disc brake								
2.0 TDI	103 - 130	04/19→	➡	+PR 1LA		**13.0460-3880.2**	**603880**	+ WE / - WK + Zub
2.0 TDI 4motion	103 - 130	04/19→				**13.0470-3880.2**	**LD3880**	+ WE / - WK + Zub Ceramic
Sensor, wheel speed								
2.0 TDI	103 - 130	04/19→	➡	for vehicles with parking assistant system	2	**24.0711-6337.3**	**360390**	
2.0 TDI 4motion	103 - 130	04/19→	➡			**24.0711-5401.3**	**360330**	
			➡			**24.0711-5402.3**	**360331**	
VW - ID.3 (E11) 11/19→								
Sensor, wheel speed								
1st	150	11/19→	⬅			**24.0711-5401.3**	**360330**	
Pro	107	11/20→	⬅			**24.0711-5402.3**	**360331**	
Pure	110	03/20→	➡			**24.0711-5401.3**	**360330**	
			➡			**24.0711-5402.3**	**360331**	
VW - ID.4 (E21) 05/20→								
Sensor, wheel speed								
GTX	77 - 220	05/21→	⬅			**24.0711-5401.3**	**360330**	
Performance	150	05/20→	⬅			**24.0711-5402.3**	**360331**	
Pure	109	01/21→	➡			**24.0711-5401.3**	**360330**	
Pure Performance	125	01/21→	➡			**24.0711-5402.3**	**360331**	
VW - JETTA III (1K2) 09/04→12/13								
Guide Bolt, brake caliper								
1.4 TSI	90 - 125	07/06→10/10		+PR 1ZE / 1ZP	2	**11.8171-0008.1**	**990049**	ATE
				+PR 1LJ / 1ZD	2	**11.8171-0008.1**	**990049**	ATE
1.6	75	09/04→10/10						
1.6 FSI	85	09/05→10/10						
1.6 MultiFuel	75	01/08→10/10						
1.6 TDI	66 - 77	06/09→10/10						
1.9 TDI	74 - 77	08/05→10/10						
2.0 FSI	110	08/05→10/10						
2.0 TDI	100 - 125	09/05→10/10						
2.0 TDI 16V	103	08/05→10/10						
2.0 TFSI	147	10/05→10/10						
2.5	125	07/08→10/10						
2.5	110	01/06→10/10		07/08→; +PR 1ZE / 1ZP	2	**11.8171-0008.1**	**990049**	ATE
				07/08→; +PR 1LJ / 1ZD	2	**11.8171-0008.1**	**990049**	ATE
Brake Disc								
1.4 TSI	90 - 125	07/06→10/10	⬅	+PR 1ZE / 1ZP		**24.0125-0145.1**	**425145**	Ø 288 Brake Disc Thickness [mm] 25 Minimum thickness [mm] 22 Vented + S
1.6	75	09/04→10/10						
1.6 FSI	85	09/05→10/10						
1.6 MultiFuel	75	01/08→10/10						
1.6 TDI	66 - 77	06/09→10/10	⬅	+PR 1LJ / 1ZD		**24.0125-0158.1**	**425158**	Ø 312 Brake Disc Thickness [mm] 25 Minimum thickness [mm] 22 Vented + S
1.9 TDI	74 - 77	08/05→10/10						
2.0 FSI	110	08/05→10/10				**24.0325-0158.1**	**525158**	Ø 312 Brake Disc Thickness [mm] 25 Minimum thickness [mm] 22 Vented + S
2.0 TDI	100 - 125	09/05→10/10						

	kW				! #			
VW - JETTA III (1K2) 09/04→12/13								
Brake Disc								
2.0 TDI 16V 2.0 TFSI	103 147	08/05→10/10 10/05→10/10		+PR 1ZE / 1ZP		**24.0125-0145.1**	**425145**	Ø 288 Brake Disc Thickness [mm] 25 Minimum thickness [mm] 22 Vented + S
				+PR 1LJ / 1ZD		**24.0125-0158.1** **24.0325-0158.1**	**425158** **525158**	Ø 312 Brake Disc Thickness [mm] 25 Minimum thickness [mm] 22 Vented + S Ø 312 Brake Disc Thickness [mm] 25 Minimum thickness [mm] 22 Vented + S
2.5	110	01/06→10/10		07/08→; +PR 1ZE / 1ZP		**24.0125-0145.1**	**425145**	Ø 288 Brake Disc Thickness [mm] 25 Minimum thickness [mm] 22 Vented + S
				07/08→; +PR 1LJ / 1ZD		**24.0125-0158.1**	**425158**	Ø 312 Brake Disc Thickness [mm] 25 Minimum thickness [mm] 22 Vented + S
2.5	125	07/08→10/10		+PR 1ZE / 1ZP		**24.0125-0145.1**	**425145**	Ø 288 Brake Disc Thickness [mm] 25 Minimum thickness [mm] 22 Vented + S
				+PR 1LJ / 1ZD		**24.0125-0158.1**	**425158**	Ø 312 Brake Disc Thickness [mm] 25 Minimum thickness [mm] 22 Vented + S
Slave Cylinder, clutch								
1.4 TSI 1.6 1.6 FSI 1.6 MultiFuel 1.6 TDI 1.9 TDI 2.0 FSI 2.0 TDI 2.0 TDI 16V 2.0 TFSI 2.5	90 - 125 75 85 75 66 - 77 74 - 77 110 100 - 125 103 147 125	07/06→10/10 09/04→10/10 09/05→10/10 01/08→10/10 06/09→10/10 08/05→10/10 08/05→10/10 09/05→10/10 08/05→10/10 10/05→10/10 07/08→10/10		Transmission Type: MQ-200		**24.2519-1706.3**	**040096**	Ø 19
2.5	110	01/06→10/10		07/08→; Transmission Type: MQ-200		**24.2519-1706.3**	**040096**	Ø 19
VW - JETTA IV (162, 163, AV3, AV2) 01/08→								
Guide Bolt, brake caliper								
1.2 TSI 1.6 TDI 2.0 TDI 2.0 TFSI 2.5	77 77 103 147 125	10/10→12/17 04/10→07/15 02/11→ 12/10→ 04/10→		04/11→; +PR 1ZA / 1ZB / 1LV	2	**11.8171-0008.1**	**990049**	ATE
1.2 TSI 16V 1.4 TSI 1.4 TSI Hybrid 1.6 1.6 MPi 1.8 TSI 2.0 2.0 TDI 2.0 TSI	77 90 - 118 110 63 - 81 66 125 85 81 155	08/14→12/17 04/11→ 04/11→ 12/11→ 09/15→04/18 07/14→ 06/10→12/17 10/10→ 12/12→12/17		+PR 1ZA / 1ZB / 1LV	2	**11.8171-0008.1**	**990049**	ATE
Brake Disc								
1.2 TSI 1.6 TDI 2.0 TDI 2.0 TFSI	77 77 103 147	10/10→12/17 04/10→07/15 02/11→ 12/10→		04/11→; +PR 1ZE / 1ZP		**24.0125-0145.1** **24.0325-0158.1**	**425145** **525158**	Ø 288 Brake Disc Thickness [mm] 25 Minimum thickness [mm] 22 Vented + S Ø 312 Brake Disc Thickness [mm] 25 Minimum thickness [mm] 22 Vented + S

© 2022 Continental Aftermarket & Services GmbH

VW - JETTA IV (162, 163, AV3, AV2) 01/08→

Brake Disc

	kW				! #			
1.2 TSI 1.6 TDI 2.0 TDI 2.0 TFSI	77 77 103 147	10/10→12/17 04/10→07/15 02/11→ 12/10→	←	04/11→; +PR 1ZA / 1ZB / 1LV		**24.0125-0158.1**	**425158**	Ø 312 Brake Disc Thickness [mm] 25 Minimum thickness [mm] 22 Vented + S
			→	04/11→; +PR 1KS / 1KT		**24.0110-0356.1**	**410356**	Ø 272 Brake Disc Thickness [mm] 9.7 Minimum thickness [mm] 8 + S
1.2 TSI 16V 1.4 TSI 1.4 TSI Hybrid 2.0 TDI 2.0 TSI	77 90 - 118 110 81 155	08/14→12/17 04/11→ 04/11→ 10/10→ 12/12→12/17	←	+PR 1ZE / 1ZP		**24.0125-0145.1** **24.0325-0158.1**	**425145** **525158**	Ø 288 Brake Disc Thickness [mm] 25 Minimum thickness [mm] 22 Vented + S Ø 312 Brake Disc Thickness [mm] 25 Minimum thickness [mm] 22 Vented + S
			←	+PR 1ZA / 1ZB / 1LV		**24.0125-0158.1**	**425158**	Ø 312 Brake Disc Thickness [mm] 25 Minimum thickness [mm] 22 Vented + S
			→	+PR 1KS / 1KT		**24.0110-0356.1**	**410356**	Ø 272 Brake Disc Thickness [mm] 9.7 Minimum thickness [mm] 8 + S
1.4 TSI 2.0 TDI	92 - 110 110	08/14→ 07/14→	←	+PR 1ZE / 1ZP		**24.0125-0145.1** **24.0325-0158.1**	**425145** **525158**	Ø 288 Brake Disc Thickness [mm] 25 Minimum thickness [mm] 22 Vented + S Ø 312 Brake Disc Thickness [mm] 25 Minimum thickness [mm] 22 Vented + S
			←	+PR 1ZA / 1ZB / 1LV		**24.0125-0158.1**	**425158**	Ø 312 Brake Disc Thickness [mm] 25 Minimum thickness [mm] 22 Vented + S
1.4 TSI 1.6 1.6 MPi 2.0	110 63 - 81 66 85	04/11→ 12/11→ 09/15→04/18 06/10→12/17	←	+PR 1ZE / 1ZP		**24.0125-0145.1**	**425145**	Ø 288 Brake Disc Thickness [mm] 25 Minimum thickness [mm] 22 Vented + S
			←	+PR 1ZA / 1ZB / 1LV		**24.0125-0158.1**	**425158**	Ø 312 Brake Disc Thickness [mm] 25 Minimum thickness [mm] 22 Vented + S
			→	+PR 1KS / 1KT		**24.0110-0356.1**	**410356**	Ø 272 Brake Disc Thickness [mm] 9.7 Minimum thickness [mm] 8 + S
1.8 TSI	125	07/14→	←	+PR 1ZE / 1ZP		**24.0125-0145.1**	**425145**	Ø 288 Brake Disc Thickness [mm] 25 Minimum thickness [mm] 22 Vented + S
			←	+PR 1ZA / 1ZB / 1LV		**24.0125-0158.1**	**425158**	Ø 312 Brake Disc Thickness [mm] 25 Minimum thickness [mm] 22 Vented + S
2.5	125	04/10→	←	04/11→; +PR 1ZE / 1ZP		**24.0125-0145.1**	**425145**	Ø 288 Brake Disc Thickness [mm] 25 Minimum thickness [mm] 22 Vented + S
			←	04/11→; +PR 1ZA / 1ZB / 1LV		**24.0125-0158.1**	**425158**	Ø 312 Brake Disc Thickness [mm] 25 Minimum thickness [mm] 22 Vented + S
			→	04/11→; +PR 1KS / 1KT		**24.0110-0356.1**	**410356**	Ø 272 Brake Disc Thickness [mm] 9.7 Minimum thickness [mm] 8 + S

Brake Hose

1.2 TSI 1.4 TSI 1.4 TSI Hybrid 1.6 TDI 2.0 2.0 TDI 2.0 TFSI 2.5	77 90 - 118 110 77 85 81 - 103 147 125	10/10→12/17 04/11→ 04/11→ 04/10→07/15 06/10→12/17 10/10→ 12/10→ 04/10→	←	12/11→	2	**24.5143-0584.3**	**331540**	L= 584
1.2 TSI 16V	77	08/14→12/17	←		2	**24.5143-0584.3**	**331540**	L= 584

	kW				! #			
VW - JETTA IV (162, 163, AV3, AV2) 01/08→								
Brake Hose								
1.4 TSI 1.6 1.6 MPi 1.8 TSI 2.0 TSI	92 - 110 63 - 81 66 125 155	08/14→ 12/11→ 09/15→04/18 07/14→ 12/12→12/17	←		2	**24.5143-0584.3**	**331540**	L= 584
2.0 TDI	110	07/14→	←	08/14→	2	**24.5143-0584.3**	**331540**	L= 584
Slave Cylinder, clutch								
1.2 TSI 1.6 TDI 2.0 TDI 2.0 TFSI 2.5	77 77 103 147 125	10/10→12/17 04/10→07/15 02/11→ 12/10→ 04/10→		04/11→; +PR 0EM		**24.2519-1706.3**	**040096**	Ø 19
1.2 TSI 16V 1.4 TSI 1.4 TSI Hybrid 1.6 1.6 MPi 2.0 2.0 TDI 2.0 TSI	77 90 - 118 110 63 - 81 66 85 81 - 110 155	08/14→12/17 04/11→ 04/11→ 12/11→ 09/15→04/18 06/10→12/17 10/10→ 12/12→12/17		+PR 0EM		**24.2519-1706.3**	**040096**	Ø 19
VW - JETTA VII Saloon (BU3) 12/17→								
Guide Bolt, brake caliper								
1.4 TSI	110	12/17→		+PR 1ZA / 1ZB / 1LV	2	**11.8171-0008.1**	**990049**	ATE
Brake Disc								
1.4 TSI	110	12/17→	←	+PR 1ZE / 1ZP		**24.0125-0145.1** **24.0325-0158.1**	**425145** **525158**	Ø 288 Brake Disc Thickness [mm] 25 Minimum thickness [mm] 22 Vented + S Ø 312 Brake Disc Thickness [mm] 25 Minimum thickness [mm] 22 Vented + S
			←	+PR 1ZA / 1ZB / 1LV		**24.0125-0158.1**	**425158**	Ø 312 Brake Disc Thickness [mm] 25 Minimum thickness [mm] 22 Vented + S
Brake Hose								
1.4 TSI	110	12/17→	←		2	**24.5143-0584.3**	**331540**	L= 584
Slave Cylinder, clutch								
1.4 TSI	110	12/17→		+PR 0EM		**24.2519-1706.3**	**040096**	Ø 19
VW - LOAD UP (121, 122, BL1, BL2) 12/14→								
Guide Bolt, brake caliper								
1.0 1.0 BlueMotion 1.0 EcoFuel 1.0 TSi BlueMotion e-Load Up	44 55 50 66 60	12/14→11/19 05/16→11/19 12/14→08/20 05/16→09/18 12/14→		+PR 1LA / 1ZQ	2	**11.8171-0008.1**	**990049**	ATE
Brake Pad Set, disc brake								
1.0 1.0 EcoFuel e-Load Up	44 50 60	12/14→11/19 12/14→08/20 12/14→	←	+PR 1ZE; 05/16→		**13.0460-2785.2** **13.0470-2609.2** **13.0470-2785.2**	**602785** **LD2609** **LD2785**	TRW 25683 20,4 + WE / + WK TRW + WE / - WK Ceramic TRW 25683 20,4 + WE / + WK Ceramic
1.0 BlueMotion 1.0 TSi BlueMotion	55 66	05/16→11/19 05/16→09/18	←	+PR 1ZE		**13.0460-2785.2** **13.0470-2609.2** **13.0470-2785.2**	**602785** **LD2609** **LD2785**	TRW 25683 20,4 + WE / + WK TRW + WE / - WK Ceramic TRW 25683 20,4 + WE / + WK Ceramic
Sensor, wheel speed								
1.0 1.0 BlueMotion	44 55	12/14→11/19 05/16→11/19	←			**24.0711-5273.3**	**360303**	
1.0 EcoFuel 1.0 TSi BlueMotion	50 66	12/14→08/20 05/16→09/18	←			**24.0711-5274.3**	**360304**	

© 2022 Continental Aftermarket & Services GmbH

	kW				! #			
VW - LOAD UP (121, 122, BL1, BL2) 12/14→								
Sensor, wheel speed								
e-Load Up	60	12/14→	←			24.0711-5273.3	360303	
			←			24.0711-5274.3	360304	
VW - LT 28-35 II Bus (2DB, 2DE, 2DK) 04/96→07/06								
Guide Bolt, brake caliper								
2.3 2.5 SDI 2.5 TDI	105 55 61 - 80	05/96→07/06 07/96→07/06 05/96→07/06	←	Type: LT 28	2	11.8171-0008.1	990049	ATE
			←	Type: LT 35	2	11.8171-0008.1	990049	ATE
			→	Type: LT 35	2	11.8171-0008.1	990049	ATE
			→	Type: LT 28	2	11.8171-0008.1	990049	ATE
2.8 TDI	96 - 116	01/99→06/06	←	Type: LT 28	2	11.8171-0008.1	990049	ATE
			→	Type: LT 28	2	11.8171-0008.1	990049	ATE
Accessory Kit, parking brake shoes								
2.3 2.5 SDI 2.5 TDI	105 55 61 - 80	05/96→07/06 07/96→07/06 05/96→07/06	→	Type: LT 35		03.0137-9700.2	669700	
			→	Type: LT 28		03.0137-9700.2	669700	
2.8 TDI	96 - 116	01/99→06/06	→	Type: LT 28		03.0137-9700.2	669700	
VW - LT 28-46 II Platform/Chassis (2DC, 2DF, 2DG, 2DL, 2DM) 04/96→07/06								
Guide Bolt, brake caliper								
2.3 2.5 SDI 2.5 TDI 2.8 TDI	105 55 61 - 80 92 - 116	06/96→07/06 09/96→07/06 06/96→07/06 07/97→07/06	←	Type: LT 35	2	11.8171-0008.1	990049	ATE
			←	Type: LT 28	2	11.8171-0008.1	990049	ATE
			→	Type: LT 28	2	11.8171-0008.1	990049	ATE
			→	Type: LT 35	2	11.8171-0008.1	990049	ATE
Accessory Kit, parking brake shoes								
2.3 2.5 SDI 2.5 TDI 2.8 TDI	105 55 61 - 80 92 - 116	06/96→07/06 09/96→07/06 06/96→07/06 07/97→07/06	→	Type: LT 35		03.0137-9700.2	669700	
			→	Type: LT 28		03.0137-9700.2	669700	
VW - LT 28-46 II Van (2DA, 2DD, 2DH) 04/96→07/06								
Guide Bolt, brake caliper								
2.3 2.5 SDI 2.5 TDI 2.8 TDI	105 55 61 - 80 92 - 116	05/96→07/06 09/96→07/06 05/96→07/06 07/97→07/06	←	Type: LT 35	2	11.8171-0008.1	990049	ATE
			←	Type: LT 28	2	11.8171-0008.1	990049	ATE
			→	Type: LT 35	2	11.8171-0008.1	990049	ATE
			→	Type: LT 28	2	11.8171-0008.1	990049	ATE
Accessory Kit, parking brake shoes								
2.3 2.5 SDI 2.5 TDI 2.8 TDI	105 55 61 - 80 92 - 116	05/96→07/06 09/96→07/06 05/96→07/06 07/97→07/06	→	Type: LT 35		03.0137-9700.2	669700	
			→	Type: LT 28		03.0137-9700.2	669700	
VW - LUPO I (6X1, 6E1) 09/98→07/05								
Guide Bolt, brake caliper								
1.2 TDI 3L	45	07/99→07/05	←	+PR 1ZB	2	11.8171-0008.1	990049	ATE
Slave Cylinder, clutch								
1.6 GTI	92	09/00→07/05				24.2519-1706.3	040096	Ø 19
VW - MULTIVAN V (7HM, 7HN, 7HF, 7EF, 7EM, 7EN) 04/03→08/15								
Guide Bolt, brake caliper								
1.9 TDI 2.0 2.5 TDI 2.5 TDI 4motion 3.2 V6	62 - 77 85 96 - 128 96 - 128 170 - 173	04/03→11/09 11/03→08/15 04/03→11/09 07/04→11/09 02/04→12/09		+PR 0WR; → 7H-8-027999	2	11.8171-0008.1	990049	ATE

	kW				! #			
VW - MULTIVAN V (7HM, 7HN, 7HF, 7EF, 7EM, 7EN) 04/03→08/15								
Guide Bolt, brake caliper								
3.2 V6 4motion	173	07/04→12/09		+PR 0WR; → 7H-8-027999	2	**11.8171-0008.1**	**990049**	ATE
Accessory Kit, parking brake shoes								
1.9 TDI	62 - 77	04/03→11/09				**03.0137-9700.2**	**669700**	
2.0	85	11/03→08/15						
2.0 BiTDI	132	09/09→08/15						
2.0 BiTDI 4motion	132	09/09→08/15						
2.0 TDI	62 - 103	09/09→08/15						
2.0 TDI 4motion	100 - 103	09/09→08/15						
2.5 TDI	96 - 128	04/03→11/09						
2.5 TDI 4motion	96 - 128	07/04→11/09						
3.2 V6	170 - 173	02/04→12/09						
3.2 V6 4motion	173	07/04→12/09						
VW - MULTIVAN VI (SGF, SGM, SGN, SHM, SHN) 04/15→								
Sensor, wheel speed								
2.0 TDI	81	07/19→	➡			**24.0711-5401.3**	**360330**	
			➡			**24.0711-5402.3**	**360331**	
VW - MULTIVAN T7 (STM, STN) 08/21→								
Sensor, wheel speed								
1.4 e-Hybrid	110 - 160	08/21→	⬅			**24.0711-5401.3**	**360330**	
1.5 TSi	100	09/21→	⬅			**24.0711-5402.3**	**360331**	
2.0 TSi	150	10/21→	➡			**24.0711-5401.3**	**360330**	
			➡			**24.0711-5402.3**	**360331**	
VW - NEW BEETLE (9C1, 1C1) 01/98→11/10								
Guide Bolt, brake caliper								
1.4	55	11/01→09/10		→ 05/10; +PR 1ZD / 1ZE	2	**11.8171-0008.1**	**990049**	ATE
1.6	75	06/00→09/10						
1.8 T	110	10/99→09/10						
1.9 TDI	74 - 77	02/01→09/10						
2.0	85	01/98→09/10						
2.5	110	07/05→09/10						
1.6	74	10/99→09/00		11/99→; +PR 1ZD / 1ZE	2	**11.8171-0008.1**	**990049**	ATE
1.8 T	132	11/01→06/05		+PR 1ZD / 1ZE	2	**11.8171-0008.1**	**990049**	ATE
1.9 TDI	66	01/98→06/04		→ 02/01; +PR 1ZD / 1ZE	2	**11.8171-0008.1**	**990049**	ATE
2.3 V5	125	10/00→09/10		→ 12/05	2	**11.8171-0008.1**	**990049**	ATE
3.2 RSI 4motion	165	04/00→05/01			2	**11.8171-0008.1**	**990049**	ATE
Brake Disc								
1.4	55	11/01→09/10	➡	→ 05/10; +PR 1KS / 1KV		**24.0109-0123.1**	**409123**	Ø 230 Brake Disc Thickness [mm] 9 Minimum thickness [mm] 7 + S
1.6	75	06/00→09/10						
1.8 T	110	10/99→09/10						
1.9 TDI	74 - 77	02/01→09/10						
2.0	85	01/98→09/10						
2.5	110	07/05→09/10						
1.6	74	10/99→09/00	➡	11/99→; +PR 1KS / 1KV		**24.0109-0123.1**	**409123**	Ø 230 Brake Disc Thickness [mm] 9 Minimum thickness [mm] 7 + S
1.8 T	132	11/01→06/05	➡	+PR 1KS / 1KV		**24.0109-0123.1**	**409123**	Ø 230 Brake Disc Thickness [mm] 9 Minimum thickness [mm] 7 + S
1.9 TDI	66	01/98→06/04	➡	→ 02/01; +PR 1KS / 1KV		**24.0109-0123.1**	**409123**	Ø 230 Brake Disc Thickness [mm] 9 Minimum thickness [mm] 7 + S
VW - NEW BEETLE Convertible (1Y7) 09/02→12/11								
Guide Bolt, brake caliper								
1.4	55	01/03→09/10		→ 05/10; +PR 1ZD / 1ZE	2	**11.8171-0008.1**	**990049**	ATE
1.6	75	01/03→09/10						
1.9 TDI	77	07/05→09/10						
2.5	110	07/05→09/10						
1.8 T	110	01/03→09/10		12/03→ 05/10; +PR 1ZD / 1ZE	2	**11.8171-0008.1**	**990049**	ATE

© 2022 Continental Aftermarket & Services GmbH

	kW				! #			
VW - NEW BEETLE Convertible (1Y7) 09/02→12/11								
Guide Bolt, brake caliper								
1.9 TDI	74	06/03→09/10		07/03→ 05/10; +PR 1ZD / 1ZE	2	**11.8171-0008.1**	**990049**	ATE
2.0	85	09/02→10/10		01/03→ 05/10; +PR 1ZD / 1ZE	2	**11.8171-0008.1**	**990049**	ATE
Brake Disc								
1.4 1.6 1.9 TDI 2.5	55 75 77 110	01/03→09/10 01/03→09/10 07/05→09/10 07/05→09/10	➡	→ 05/10; +PR 1KS / 1KV		**24.0109-0123.1**	**409123**	Ø 230 Brake Disc Thickness [mm] 9 Minimum thickness [mm] 7 + S
1.8 T	110	01/03→09/10	➡	12/03→ 05/10; +PR 1KS / 1KV		**24.0109-0123.1**	**409123**	Ø 230 Brake Disc Thickness [mm] 9 Minimum thickness [mm] 7 + S
1.9 TDI	74	06/03→09/10	➡	07/03→ 05/10; +PR 1KS / 1KV		**24.0109-0123.1**	**409123**	Ø 230 Brake Disc Thickness [mm] 9 Minimum thickness [mm] 7 + S
2.0	85	09/02→10/10	➡	01/03→ 05/10; +PR 1KS / 1KV		**24.0109-0123.1**	**409123**	Ø 230 Brake Disc Thickness [mm] 9 Minimum thickness [mm] 7 + S
VW - PASSAT ALLTRACK B7 (365) 01/12→12/14								
Brake Caliper								
1.8 TSI	112 - 118	01/12→12/14	⬅	+PR 1LA / 1LB; ◪		**24.3601-1727.5**	**240786**	TRW without holder
2.0 TDI 2.0 TDI 4motion 2.0 TSI 4motion	103 103 - 130 155	01/12→12/14 01/12→12/14 01/12→12/14	⬅	+PR 1LA / 1LB; ◪		**24.3601-1728.5**	**240787**	TRW without holder
Guide Bolt, brake caliper								
1.8 TSI 2.0 TDI 2.0 TDI 4motion 2.0 TSI 4motion	112 - 118 103 103 - 130 155	01/12→12/14 01/12→12/14 01/12→12/14 01/12→12/14		+PR 1ZM / 1ZG	2	**11.8171-0008.1**	**990049**	ATE
Brake Disc								
1.8 TSI	112	01/12→12/14	⬅	+PR 1ZM / 1ZG		**24.0125-0158.1**	**425158**	Ø 312 Brake Disc Thickness [mm] 25 Minimum thickness [mm] 22 Vented + S
			⬅	+PR 1LA / 1LB		**24.0130-0225.1**	**430225**	Ø 340 Brake Disc Thickness [mm] 30 Minimum thickness [mm] 27 Vented + S
			➡	+PR 2EA; + eFSB		**24.0122-0219.1**	**422219**	Ø 310 Brake Disc Thickness [mm] 22 Minimum thickness [mm] 20 Vented
1.8 TSI 2.0 TDI 2.0 TDI 4motion 2.0 TSI 4motion	118 103 103 - 130 155	01/12→12/14 01/12→12/14 01/12→12/14 01/12→12/14	⬅	+PR 1ZM / 1ZG		**24.0125-0158.1** **24.0325-0158.1**	**425158** **525158**	Ø 312 Brake Disc Thickness [mm] 25 Minimum thickness [mm] 22 Vented + S Ø 312 Brake Disc Thickness [mm] 25 Minimum thickness [mm] 22 Vented + S
			⬅	+PR 1LA / 1LB		**24.0130-0225.1**	**430225**	Ø 340 Brake Disc Thickness [mm] 30 Minimum thickness [mm] 27 Vented + S
			➡	+PR 2EA; + eFSB		**24.0122-0219.1**	**422219**	Ø 310 Brake Disc Thickness [mm] 22 Minimum thickness [mm] 20 Vented
Sensor, wheel speed								
2.0 TDI 4motion	103 - 130	01/12→12/14	➡	◪		**24.0711-5401.3**	**360330**	
2.0 TSI 4motion	155	01/12→12/14	➡	◪		**24.0711-5402.3**	**360331**	
Slave Cylinder, clutch								
1.8 TSI 2.0 TDI 2.0 TDI 4motion	112 - 118 103 103 - 130	01/12→12/14 01/12→12/14 01/12→12/14		+PR 0EM / 0EN		**24.2519-1706.3**	**040096**	Ø 19

	kW				! #			
VW - PASSAT ALLTRACK B7 (365) 01/12→12/14								
Slave Cylinder, clutch								
2.0 TSI 4motion	155	01/12→12/14		+PR 0EM / 0EN		**24.2519-1706.3**	**040096**	Ø 19
VW - PASSAT ALLTRACK B8 Variant (3G5, CB5) 05/15→								
Brake Master Cylinder								
1.4 TSI 4motion 2.0 TDI 4motion 2.0 TSI 4motion	110 110 - 176 162 - 206	05/15→ 05/15→ 07/15→		for left-hand drive vehicles; +PR 1ZA / 1ZD		**24.4123-1719.3**	**011017**	TRW Ø 23.8 without brake fluid reservoir
Brake Caliper								
1.4 TSI 4motion 2.0 TDI 4motion 2.0 TSI 4motion	110 110 - 176 162 - 206	05/15→ 05/15→ 07/15→	←	+PR 1ZA / 1ZD / 1ZK / 1ZL;		**24.3571-1801.5**	**241387**	without holder
			←	+PR 1ZA / 1ZD / 1ZK / 1ZL;		**24.3571-1802.5**	**241388**	without holder
			←	+PR 1LA / 1LB;		**24.3601-1727.5**	**240786**	TRW without holder
			←	+PR 1LA / 1LB;		**24.3601-1728.5**	**240787**	TRW without holder
			→	+PR 1KZ;		**24.6242-7001.5**	**241335**	ATE + EMot / without holder + eFSB
			→	+PR 1KZ;		**24.6242-7002.5**	**241336**	ATE + EMot / without holder + eFSB
			→	+PR 2EA;		**24.6242-7005.5**	**241337**	ATE + EMot / without holder + eFSB
			→	+PR 1KU;		**24.6242-7005.5**	**241337**	ATE + EMot / without holder + eFSB
			→	+PR 1KU;		**24.6242-7006.5**	**241338**	ATE + EMot / without holder + eFSB
			→	+PR 2EA;		**24.6242-7006.5**	**241338**	ATE + EMot / without holder + eFSB
Brake Pad Set, disc brake								
1.4 TSI 4motion 2.0 TDI 4motion 2.0 TSI 4motion	110 110 - 176 162 - 206	05/15→ 05/15→ 07/15→	←	+PR 1LA		**13.0460-2617.2** **13.0470-2617.2**	**602617** **LD2617**	TRW + WK TRW + WK Ceramic
			←	+PR 1ZA / 1ZC / 1ZD / 1ZG / 1ZK / 1ZL		**13.0460-2785.2** **13.0470-2785.2**	**602785** **LD2785**	TRW 25683 20,4 + WE / + WK TRW 25683 20,4 + WE / + WK Ceramic
			→	+PR 1KU / 1KZ / 2EA / 2ER; + eFSB		**13.0460-7294.2** **13.0470-7294.2**	**607294** **LD7294**	ATE 25009 16,4 - WE / - WK ATE 25009 16,4 - WE / - WK Ceramic
Warning Contact, brake pad wear								
1.4 TSI 4motion 2.0 TDI 4motion 2.0 TSI 4motion	110 110 - 176 162 - 206	05/15→ 05/15→ 07/15→	←	+PR 1ZA / 1ZC / 1ZD / 1ZG / 1ZK / 1ZL	1	**24.8190-0065.2**	**620065**	
			←	+PR 1LA	1	**24.8190-0065.2**	**620065**	
Brake Disc								
1.4 TSI 4motion 2.0 TDI 4motion 2.0 TSI 4motion	110 135 - 147 200 - 206	05/15→ 07/15→ 08/18→	←	+PR 1ZA / 1ZC / 1ZD / 1ZG / 1ZK / 1ZL		**24.0125-0158.1**	**425158**	Ø 312 Brake Disc Thickness [mm] 25 Minimum thickness [mm] 22 Vented + S
			←	+PR 1LA / 1LB		**24.0130-0225.1**	**430225**	Ø 340 Brake Disc Thickness [mm] 30 Minimum thickness [mm] 27 Vented + S
			→	+PR 1KU / 2EA; + eFSB		**24.0112-0210.1**	**412210**	Ø 300 Brake Disc Thickness [mm] 12 Minimum thickness [mm] 10 + S
			→	+PR 1KZ		**24.0122-0219.1**	**422219**	Ø 310 Brake Disc Thickness [mm] 22 Minimum thickness [mm] 20 Vented
2.0 TDI 4motion 2.0 TSI 4motion	110 - 176 162	05/15→ 07/15→	←	+PR 1ZA / 1ZC / 1ZD / 1ZG / 1ZK / 1ZL		**24.0125-0158.1** **24.0325-0158.1**	**425158** **525158**	Ø 312 Brake Disc Thickness [mm] 25 Minimum thickness [mm] 22 Vented + S Ø 312 Brake Disc Thickness [mm] 25 Minimum thickness [mm] 22 Vented + S

© 2022 Continental Aftermarket & Services GmbH

	kW				! #			
VW - PASSAT ALLTRACK B8 Variant (3G5, CB5) 05/15→								
Brake Disc								
2.0 TDI 4motion 2.0 TSI 4motion	110 - 176 162	05/15→ 07/15→	←	+PR 1LA / 1LB		**24.0130-0225.1**	**430225**	Ø 340 Brake Disc Thickness [mm] 30 Minimum thickness [mm] 27 Vented + S
			→	+PR 1KU / 2EA; + eFSB		**24.0112-0210.1**	**412210**	Ø 300 Brake Disc Thickness [mm] 12 Minimum thickness [mm] 10 + S
			→	+PR 1KZ		**24.0122-0219.1**	**422219**	Ø 310 Brake Disc Thickness [mm] 22 Minimum thickness [mm] 20 Vented
Sensor, wheel speed								
1.4 TSI 4motion 2.0 TDI 4motion 2.0 TSI 4motion	110 110 - 176 162 - 206	05/15→ 05/15→ 07/15→	←			**24.0711-5273.3**	**360303**	
			←			**24.0711-5274.3**	**360304**	
			→			**24.0711-5401.3**	**360330**	
			→			**24.0711-5402.3**	**360331**	
Slave Cylinder, clutch								
1.4 TSI 4motion 2.0 TDI 4motion 2.0 TSI 4motion	110 110 - 176 162 - 206	05/15→ 05/15→ 07/15→		+PR 0EJ		**24.2519-1706.3**	**040096**	Ø 19
Control Element, parking brake caliper								
1.4 TSI 4motion 2.0 TDI 4motion 2.0 TSI 4motion	110 110 - 176 162 - 206	05/15→ 05/15→ 07/15→	→	+PR 1KU / 1KZ / 2EA;		**11.9282-1001.3**	**250159**	ATE
			→	+PR 1KU / 1KZ / 2EA;		**11.9282-1002.3**	**250160**	ATE
VW - PASSAT B3/B4 (3A2, 35I) 02/88→12/97								
Guide Bolt, brake caliper								
2.0 16V	110	01/94→08/96	←		2	**11.8171-0008.1**	**990049**	ATE
2.8 VR6	128	06/91→08/96	←	10/93→	2	**11.8171-0008.1**	**990049**	ATE
VW - PASSAT B3/B4 Variant (3A5, 35I) 02/88→06/97								
Guide Bolt, brake caliper								
2.0 16V	110	01/94→05/97	←	→ 12/96	2	**11.8171-0008.1**	**990049**	ATE
2.8 VR6	128	06/91→05/97	←	10/93→ 12/96	2	**11.8171-0008.1**	**990049**	ATE
2.9 VR6 Syncro	135	01/94→05/97	←	10/94→ 12/96	2	**11.8171-0008.1**	**990049**	ATE
VW - PASSAT B5.5 (3B3) 10/00→12/05								
Guide Bolt, brake caliper								
1.6 1.8 T 1.8 T 20V 1.8 T 4motion	75 125 110 125	11/00→05/05 02/01→11/05 11/00→05/05 11/03→05/05	←	→ 3B-X-124107; +PR 1LB / 1LE / 1ZC	2	**11.8171-0008.1**	**990049**	ATE
			←	3B-X-124108→; +PR 1LB / 1LE / 1ZC	2	**11.8171-0008.1**	**990049**	ATE
1.9 TDI 1.9 TDI 4motion 2.0 2.0 4motion	74 - 96 96 85 85	11/00→05/05 11/00→05/05 11/00→05/05 11/00→05/05	←	+PR 1LB / 1LE / 1ZC	2	**11.8171-0008.1**	**990049**	ATE
2.0	96	11/01→05/05	←	05/02→; +PR 1LB / 1LE / 1ZC	2	**11.8171-0008.1**	**990049**	ATE
2.0 TDI	100	12/03→05/05		+PR 1LT	2	**11.8171-0008.1**	**990049**	ATE
			←	+PR 1LB / 1LE / 1ZC	2	**11.8171-0008.1**	**990049**	ATE
2.3 V5 2.3 V5 4motion 2.8 2.8 4motion	125 125 140 - 142 140 - 142	11/00→05/05 11/00→05/05 10/00→05/05 10/00→05/05		+PR 1LT	2	**11.8171-0008.1**	**990049**	ATE
			←	→ 3B-X-124107; +PR 1LB / 1LE / 1ZC	2	**11.8171-0008.1**	**990049**	ATE
2.5 TDI 2.5 TDI 4motion	110 - 120 110 - 132	11/00→05/05 11/00→05/05		+PR 1LT	2	**11.8171-0008.1**	**990049**	ATE
4.0 W8 4motion	202	09/01→09/04		+PR 1ZF / 1ZG	2	**11.8171-0008.1**	**990049**	ATE

	kW				! #			
VW - PASSAT B5.5 Variant (3B6) 09/00→08/05								
Guide Bolt, brake caliper								
1.6 1.8 T 20V	75 110	11/00→05/05 11/00→05/05	←	→ 3B-X-124107; +PR 1LB / 1LE / 1ZC	2	**11.8171-0008.1**	**990049**	ATE
			←	3B-X-124108→; +PR 1LB / 1LE / 1ZC	2	**11.8171-0008.1**	**990049**	ATE
1.8 4motion 1.9 TDI 1.9 TDI 4motion 2.0 2.0 4motion	125 74 - 96 96 85 85	11/03→05/05 11/00→05/05 11/00→05/05 11/00→05/05 11/00→05/05	←	+PR 1LB / 1LE / 1ZC	2	**11.8171-0008.1**	**990049**	ATE
1.8 T	125	05/02→08/05	←	→ 3B-X-124107; +PR 1LB / 1LE / 1ZC	2	**11.8171-0008.1**	**990049**	ATE
			←	3B-X-124108→; → 06/05; +PR 1LB / 1LE / 1ZC	2	**11.8171-0008.1**	**990049**	ATE
2.0	96	11/01→05/05	←	05/02→; +PR 1LB / 1LE / 1ZC	2	**11.8171-0008.1**	**990049**	ATE
2.0 TDI	100	12/03→05/05		+PR 1LT	2	**11.8171-0008.1**	**990049**	ATE
			←	+PR 1LB / 1LE / 1ZC	2	**11.8171-0008.1**	**990049**	ATE
2.3 VR5 2.3 VR5 4motion 2.8 4motion	125 125 140 - 142	11/00→05/05 11/00→05/05 10/00→05/05		+PR 1LT	2	**11.8171-0008.1**	**990049**	ATE
			←	→ 3B-X-124107; +PR 1LB / 1LE / 1ZC	2	**11.8171-0008.1**	**990049**	ATE
2.5 TDI 2.5 TDI 4motion	110 - 120 110 - 132	11/00→05/05 11/00→05/05		+PR 1LT	2	**11.8171-0008.1**	**990049**	ATE
2.8	142	10/00→08/05		→ 06/05; +PR 1LT	2	**11.8171-0008.1**	**990049**	ATE
			←	→ 3B-X-124107; +PR 1LB / 1LE / 1ZC	2	**11.8171-0008.1**	**990049**	ATE
4.0 W8 4motion	202	09/01→09/04		+PR 1ZF / 1ZG	2	**11.8171-0008.1**	**990049**	ATE
VW - PASSAT B5 (3B2) 08/96→12/01								
Guide Bolt, brake caliper								
1.6 1.8 1.8 Syncro/4motion 1.8 T 1.9 TDI 1.9 TDI 4motion 1.9 TDI Syncro/4motion	74 92 92 110 66 - 85 85 81	10/96→11/00 10/96→11/00 12/96→08/00 10/96→11/00 10/96→11/00 08/99→11/00 06/97→08/00	←	→ 3B-X-124107; +PR 1LB / 1LE / 1ZC	2	**11.8171-0008.1**	**990049**	ATE
			←	3B-X-124108→; +PR 1LB / 1LE / 1ZC	2	**11.8171-0008.1**	**990049**	ATE
1.9 TDI 2.0 2.0 4motion	74 88 88	02/00→11/00 04/00→11/00 04/00→11/00	←	10/00→; +PR 1LB / 1LE / 1ZC	2	**11.8171-0008.1**	**990049**	ATE
2.3 VR5 2.3 VR5 Syncro/4motion 2.8 V6 2.8 V6 4motion 2.8 V6 Syncro/4motion	110 110 140 - 142 140 142	10/96→11/00 10/97→11/00 08/96→11/00 09/99→11/00 10/96→11/00		10/00→; +PR 1LT	2	**11.8171-0008.1**	**990049**	ATE
			←	→ 3B-X-124107; +PR 1LB / 1LE / 1ZC	2	**11.8171-0008.1**	**990049**	ATE
			←	3B-X-124108→; → 09/00; +PR 1LB / 1LE / 1ZC	2	**11.8171-0008.1**	**990049**	ATE
2.5 TDI	110	07/98→11/00		10/00→; +PR 1LT	2	**11.8171-0008.1**	**990049**	ATE
			←	08/98→ 09/00; +PR 1LB / 1LE / 1ZC	2	**11.8171-0008.1**	**990049**	ATE
2.5 TDI Syncro/4motion	110	12/98→11/00		10/00→; +PR 1LT	2	**11.8171-0008.1**	**990049**	ATE
			←	→ 09/00; +PR 1LB / 1LE / 1ZC	2	**11.8171-0008.1**	**990049**	ATE
2.8 V6	132	05/97→09/99	←	3B-X-124108→	2	**11.8171-0008.1**	**990049**	ATE
			←	→ 3B-X-124107	2	**11.8171-0008.1**	**990049**	ATE
VW - PASSAT B5 Variant (3B5) 05/97→12/01								
Guide Bolt, brake caliper								
1.6 1.8 1.8 Syncro/4motion 1.8 T 1.9 TDI 1.9 TDI 4motion 1.9 TDI Syncro/4motion	74 92 92 110 66 - 85 85 81	06/97→11/00 06/97→11/00 06/97→11/00 05/97→11/00 06/97→11/00 08/99→11/00 06/97→08/00	←	→ 3B-X-124107; +PR 1LB / 1LE / 1ZC	2	**11.8171-0008.1**	**990049**	ATE
			←	3B-X-124108→; +PR 1LB / 1LE / 1ZC	2	**11.8171-0008.1**	**990049**	ATE
1.9 TDI 2.0 2.0 4motion	74 88 88	02/00→11/00 04/00→11/00 04/00→11/00	←	10/00→; +PR 1LB / 1LE / 1ZC	2	**11.8171-0008.1**	**990049**	ATE
2.3 VR5 2.3 VR5 Syncro/4motion 2.8 V6 2.8 V6 4motion 2.8 V6 Syncro/4motion	110 110 140 - 142 140 142	06/97→11/00 10/97→11/00 06/97→11/00 09/99→11/00 06/97→11/00		10/00→; +PR 1LT	2	**11.8171-0008.1**	**990049**	ATE
			←	→ 3B-X-124107; +PR 1LB / 1LE / 1ZC	2	**11.8171-0008.1**	**990049**	ATE
			←	3B-X-124108→; → 09/00; +PR 1LB / 1LE / 1ZC	2	**11.8171-0008.1**	**990049**	ATE
2.5 TDI	110	07/98→11/00		10/00→; +PR 1LT	2	**11.8171-0008.1**	**990049**	ATE
			←	08/98→ 09/00; +PR 1LB / 1LE / 1ZC	2	**11.8171-0008.1**	**990049**	ATE

© 2022 Continental Aftermarket & Services GmbH

	kW				! #			
VW - PASSAT B5 Variant (3B5) 05/97→12/01								
Guide Bolt, brake caliper								
2.5 TDI Syncro/4motion	110	12/98→11/00		10/00→; +PR 1LT	2	**11.8171-0008.1**	**990049**	ATE
			←	→ 09/00; +PR 1LB / 1LE / 1ZC	2	**11.8171-0008.1**	**990049**	ATE
2.8 V6	132	09/97→09/99	←	3B-X-124108→	2	**11.8171-0008.1**	**990049**	ATE
			←	→ 3B-X-124107	2	**11.8171-0008.1**	**990049**	ATE
VW - PASSAT B6 (3C2) 03/05→12/10								
Guide Bolt, brake caliper								
1.4 TSI	90	05/07→07/10		10/07→; +PR 1LJ / 1LH / 1ZG / 1ZM	2	**11.8171-0008.1**	**990049**	ATE
1.8 TSI	118	05/07→07/10		10/07→; +PR 1LK / 1LM	2	**11.8171-0008.1**	**990049**	ATE
1.4 TSI EcoFuel	110	01/09→07/10		+PR 1LJ / 1LH / 1ZG / 1ZM	2	**11.8171-0008.1**	**990049**	ATE
1.6	75	05/05→07/10		+PR 1LK / 1LM	2	**11.8171-0008.1**	**990049**	ATE
1.6 FSI	85	03/05→06/08						
1.6 TDI	77	08/09→07/10						
1.8 TSI	112	11/09→07/10						
1.9 TDI	77	03/05→07/10						
2.0 FSI	110 - 125	03/05→07/10						
2.0 FSI 4motion	110	09/05→07/10						
2.0 TDI	81 - 125	03/05→07/10						
2.0 TDI 16V	103	03/05→07/10						
2.0 TDI 4motion	103 - 125	03/05→07/10						
2.0 TFSI	147	07/05→07/10						
3.2 FSI 4motion	184	11/05→07/10						
3.6 R36 4motion	220	04/07→07/10						
2.0 BlueTDI	105	01/09→11/10		+PR 1LJ / 1LH / 1ZG / 1ZM; → 07/10	2	**11.8171-0008.1**	**990049**	ATE
2.0 TDI	100	03/05→11/10		+PR 1LK / 1LM; → 07/10	2	**11.8171-0008.1**	**990049**	ATE
2.0 TDI 16V 4motion	103	03/05→08/10						
Brake Disc								
1.4 TSI	90	05/07→07/10	←	10/07→; +PR 1LJ / 1LH / 1ZG / 1ZM		**24.0125-0158.1**	**425158**	Ø 312 Brake Disc Thickness [mm] 25 Minimum thickness [mm] 22 Vented + S
1.8 TSI	118	05/07→07/10				**24.0325-0158.1**	**525158**	Ø 312 Brake Disc Thickness [mm] 25 Minimum thickness [mm] 22 Vented + S
			→	10/07→; +PR 2EA / 2EL; + eFSB		**24.0122-0219.1**	**422219**	Ø 310 Brake Disc Thickness [mm] 22 Minimum thickness [mm] 20 Vented
1.4 TSI EcoFuel	110	01/09→07/10	←	+PR 1LJ / 1LH / 1ZG / 1ZM		**24.0125-0158.1**	**425158**	Ø 312 Brake Disc Thickness [mm] 25 Minimum thickness [mm] 22 Vented + S
1.6	75	05/05→07/10						
1.6 FSI	85	03/05→06/08						
1.6 TDI	77	08/09→07/10						
1.9 TDI	77	03/05→07/10				**24.0325-0158.1**	**525158**	Ø 312 Brake Disc Thickness [mm] 25 Minimum thickness [mm] 22 Vented + S
2.0 FSI	110	03/05→07/10						
2.0 FSI 4motion	110	09/05→07/10						
2.0 TDI	81 - 125	03/05→07/10						
2.0 TDI 16V	103	03/05→07/10	→	+PR 2EA / 2EL; + eFSB		**24.0122-0219.1**	**422219**	Ø 310 Brake Disc Thickness [mm] 22 Minimum thickness [mm] 20 Vented
2.0 TDI 4motion	103 - 125	03/05→07/10						
2.0 TFSI	147	07/05→07/10						
3.2 FSI 4motion	184	11/05→07/10						
3.6 R36 4motion	220	04/07→07/10						
1.8 TSI	112	11/09→07/10	←	+PR 1LJ / 1LH / 1ZG / 1ZM		**24.0125-0158.1**	**425158**	Ø 312 Brake Disc Thickness [mm] 25 Minimum thickness [mm] 22 Vented + S
2.0 FSI	125	08/07→07/10						
			→	+PR 2EA / 2EL; + eFSB		**24.0122-0219.1**	**422219**	Ø 310 Brake Disc Thickness [mm] 22 Minimum thickness [mm] 20 Vented
2.0 BlueTDI	105	01/09→11/10	←	→ 07/10; +PR 1LJ / 1LH / 1ZG / 1ZM		**24.0125-0158.1**	**425158**	Ø 312 Brake Disc Thickness [mm] 25 Minimum thickness [mm] 22 Vented + S
2.0 TDI	100	03/05→11/10						
2.0 TDI 16V 4motion	103	03/05→08/10				**24.0325-0158.1**	**525158**	Ø 312 Brake Disc Thickness [mm] 25 Minimum thickness [mm] 22 Vented + S

	kW				! #			
VW - PASSAT B6 (3C2) 03/05→12/10								
Brake Disc								
2.0 BlueTDI 2.0 TDI 2.0 TDI 16V 4motion	105 100 103	01/09→11/10 03/05→11/10 03/05→08/10	➡	→ 07/10; +PR 2EA / 2EL; + eFSB		**24.0122-0219.1**	**422219**	Ø 310 Brake Disc Thickness [mm] 22 Minimum thickness [mm] 20 Vented
Slave Cylinder, clutch								
1.4 TSI 1.8 TSI	90 118	05/07→07/10 05/07→07/10		10/07→; Transmission Type: MQ-200		**24.2519-1706.3**	**040096**	Ø 19
1.4 TSI EcoFuel 1.6 1.6 FSI 1.6 TDI 1.8 TSI 1.9 TDI 2.0 FSI 2.0 FSI 4motion 2.0 TDI 2.0 TDI 16V 2.0 TDI 4motion 2.0 TFSI 3.2 FSI 4motion 3.6 R36 4motion	110 75 85 77 112 77 110 - 125 110 81 - 125 103 103 - 125 147 184 220	01/09→07/10 05/05→07/10 03/05→06/08 08/09→07/10 11/09→07/10 03/05→07/10 03/05→07/10 09/05→07/10 03/05→07/10 03/05→07/10 03/05→07/10 07/05→07/10 11/05→07/10 04/07→07/10		Transmission Type: MQ-200		**24.2519-1706.3**	**040096**	Ø 19
2.0 BlueTDI 2.0 TDI 2.0 TDI 16V 4motion	105 100 103	01/09→11/10 03/05→11/10 03/05→08/10		→ 07/10; Transmission Type: MQ-200		**24.2519-1706.3**	**040096**	Ø 19
VW - PASSAT B6 Variant (3C5) 08/05→11/11								
Guide Bolt, brake caliper								
1.4 TSI 1.8 TSI	90 118	05/07→11/10 05/07→10/11		10/07→ 07/10; +PR 1LJ / 1LH / 1ZG / 1ZM	2	**11.8171-0008.1**	**990049**	ATE
				10/07→ 07/10; +PR 1LK / 1LM	2	**11.8171-0008.1**	**990049**	ATE
1.4 TSI EcoFuel 1.6 1.6 TDI 1.8 TSI 2.0 BlueTDI 2.0 FSI 2.0 FSI 4motion 2.0 TDI 2.0 TDI 16V 2.0 TDI 4motion 2.0 TFSI 3.2 FSI 4motion 3.6 R36 4motion	110 75 77 112 105 110 110 81 - 125 103 125 147 184 220	01/09→11/10 08/05→11/10 08/09→11/10 11/09→11/10 01/09→11/10 08/05→11/10 09/05→11/10 08/05→11/10 08/05→11/10 05/09→11/10 08/05→11/10 11/05→11/10 04/07→11/10		→ 07/10; +PR 1LJ / 1LH / 1ZG / 1ZM	2	**11.8171-0008.1**	**990049**	ATE
				→ 07/10; +PR 1LK / 1LM	2	**11.8171-0008.1**	**990049**	ATE
1.6 FSI 1.9 TDI 2.0 TDI	85 77 88 - 120	08/05→06/08 08/05→11/10 08/05→05/09		+PR 1LJ / 1LH / 1ZG / 1ZM	2	**11.8171-0008.1**	**990049**	ATE
				+PR 1LK / 1LM	2	**11.8171-0008.1**	**990049**	ATE
2.0 TDI 16V 4motion	103	08/05→11/10		09/05→ 07/10; +PR 1LJ / 1LH / 1ZG / 1ZM	2	**11.8171-0008.1**	**990049**	ATE
				09/05→ 07/10; +PR 1LK / 1LM	2	**11.8171-0008.1**	**990049**	ATE
2.0 TDI 4motion	103	08/05→05/09		09/05→; +PR 1LJ / 1LH / 1ZG / 1ZM	2	**11.8171-0008.1**	**990049**	ATE
				09/05→; +PR 1LK / 1LM	2	**11.8171-0008.1**	**990049**	ATE
Brake Disc								
1.4 TSI 1.8 TSI	90 118	05/07→11/10 05/07→10/11	⬅	10/07→ 07/10; +PR 1LJ / 1LH / 1ZG / 1ZM		**24.0125-0158.1** **24.0325-0158.1**	**425158** **525158**	Ø 312 Brake Disc Thickness [mm] 25 Minimum thickness [mm] 22 Vented + S Ø 312 Brake Disc Thickness [mm] 25 Minimum thickness [mm] 22 Vented + S
			➡	10/07→ 07/10; +PR 2EA / 2EL		**24.0122-0219.1**	**422219**	Ø 310 Brake Disc Thickness [mm] 22 Minimum thickness [mm] 20 Vented
1.4 TSI EcoFuel 1.6 1.6 TDI 2.0 BlueTDI 2.0 FSI 2.0 FSI 4motion 2.0 TDI	110 75 77 105 110 110 81 - 125	01/09→11/10 08/05→11/10 08/09→11/10 01/09→11/10 08/05→11/10 09/05→11/10 08/05→11/10	⬅	→ 07/10; +PR 1LJ / 1LH / 1ZG / 1ZM		**24.0125-0158.1**	**425158**	Ø 312 Brake Disc Thickness [mm] 25 Minimum thickness [mm] 22 Vented + S

© 2022 Continental Aftermarket & Services GmbH

VW - PASSAT B6 Variant (3C5) 08/05→11/11

Brake Disc

	kW				! #			
2.0 TDI 16V 2.0 TDI 4motion 2.0 TFSI 3.2 FSI 4motion 3.6 R36 4motion	103 125 147 184 220	08/05→11/10 05/09→11/10 08/05→11/10 11/05→11/10 04/07→11/10	←	→ 07/10; +PR 1LJ / 1LH / 1ZG / 1ZM		**24.0325-0158.1**	**525158**	Ø 312 Brake Disc Thickness [mm] 25 Minimum thickness [mm] 22 Vented + S
			→	→ 07/10; +PR 2EA / 2EL		**24.0122-0219.1**	**422219**	Ø 310 Brake Disc Thickness [mm] 22 Minimum thickness [mm] 20 Vented
1.6 FSI 1.9 TDI 2.0 TDI	85 77 88 - 120	08/05→06/08 08/05→11/10 08/05→05/09	←	+PR 1LJ / 1LH / 1ZG / 1ZM		**24.0125-0158.1** **24.0325-0158.1**	**425158** **525158**	Ø 312 Brake Disc Thickness [mm] 25 Minimum thickness [mm] 22 Vented + S Ø 312 Brake Disc Thickness [mm] 25 Minimum thickness [mm] 22 Vented + S
			→	+PR 2EA / 2EL		**24.0122-0219.1**	**422219**	Ø 310 Brake Disc Thickness [mm] 22 Minimum thickness [mm] 20 Vented
1.8 TSI	112	11/09→11/10	←	→ 07/10; +PR 1LJ / 1LH / 1ZG / 1ZM		**24.0125-0158.1**	**425158**	Ø 312 Brake Disc Thickness [mm] 25 Minimum thickness [mm] 22 Vented + S
			→	→ 07/10; +PR 2EA / 2EL		**24.0122-0219.1**	**422219**	Ø 310 Brake Disc Thickness [mm] 22 Minimum thickness [mm] 20 Vented
2.0 TDI 16V 4motion	103	08/05→11/10	←	09/05→ 07/10; +PR 1LJ / 1LH / 1ZG / 1ZM		**24.0125-0158.1** **24.0325-0158.1**	**425158** **525158**	Ø 312 Brake Disc Thickness [mm] 25 Minimum thickness [mm] 22 Vented + S Ø 312 Brake Disc Thickness [mm] 25 Minimum thickness [mm] 22 Vented + S
			→	09/05→ 07/10; +PR 2EA / 2EL		**24.0122-0219.1**	**422219**	Ø 310 Brake Disc Thickness [mm] 22 Minimum thickness [mm] 20 Vented
2.0 TDI 4motion	103	08/05→05/09	←	09/05→; +PR 1LJ / 1LH / 1ZG / 1ZM		**24.0125-0158.1** **24.0325-0158.1**	**425158** **525158**	Ø 312 Brake Disc Thickness [mm] 25 Minimum thickness [mm] 22 Vented + S Ø 312 Brake Disc Thickness [mm] 25 Minimum thickness [mm] 22 Vented + S
			→	09/05→; +PR 2EA / 2EL		**24.0122-0219.1**	**422219**	Ø 310 Brake Disc Thickness [mm] 22 Minimum thickness [mm] 20 Vented

Slave Cylinder, clutch

1.4 TSI 1.8 TSI	90 118	05/07→11/10 05/07→10/11		10/07→ 07/10; Transmission Type: MQ-200		**24.2519-1706.3**	**040096**	Ø 19
1.4 TSI EcoFuel 1.6 1.6 TDI 1.8 TSI 2.0 BlueTDI 2.0 FSI 2.0 FSI 4motion 2.0 TDI 2.0 TDI 16V 2.0 TDI 4motion 2.0 TFSI 3.2 FSI 4motion 3.6 R36 4motion	110 75 77 112 105 110 110 81 - 125 103 125 147 184 220	01/09→11/10 08/05→11/10 08/09→11/10 11/09→11/10 01/09→11/10 08/05→11/10 09/05→11/10 08/05→11/10 08/05→11/10 05/09→11/10 08/05→11/10 11/05→11/10 04/07→11/10		→ 07/10; Transmission Type: MQ-200		**24.2519-1706.3**	**040096**	Ø 19
1.6 FSI 1.9 TDI 2.0 TDI	85 77 88 - 120	08/05→06/08 08/05→11/10 08/05→05/09		Transmission Type: MQ-200		**24.2519-1706.3**	**040096**	Ø 19
2.0 TDI 16V 4motion	103	08/05→11/10		09/05→ 07/10; Transmission Type: MQ-200		**24.2519-1706.3**	**040096**	Ø 19
2.0 TDI 4motion	103	08/05→05/09		09/05→; Transmission Type: MQ-200		**24.2519-1706.3**	**040096**	Ø 19

© 2022 Continental Aftermarket & Services GmbH

VW - PASSAT B7 (362) 08/10→12/15

	kW				! #			
Brake Caliper								
1.4 TSI	90 - 118	08/10→12/14	←	→ 10/14; +PR 1LA / 1LB;		**24.3601-1727.5**	**240786**	TRW without holder
1.4 TSI EcoFuel 1.4 TSI MultiFuel 1.6 TDI 1.8 TSI 2.0 TDI 2.0 TDI 4motion 2.0 TSI 3.6 FSI 4motion	110 118 77 112 - 118 100 - 130 103 - 130 155 220	08/10→12/14 11/10→12/14 08/10→12/14 08/10→12/14 08/10→12/14 08/10→12/14 11/10→12/14 01/11→12/14	←	→ 10/14; +PR 1LA / 1LB;		**24.3601-1728.5**	**240787**	TRW without holder
2.0 TDI 4motion	125	08/10→01/13	←	+PR 1LA / 1LB;		**24.3601-1727.5**	**240786**	TRW without holder
			←	+PR 1LA / 1LB;		**24.3601-1728.5**	**240787**	TRW without holder
Guide Bolt, brake caliper								
1.4 TSI	90 - 118	08/10→12/14		→ 10/14; +PR 1ZM / 1ZG	2	**11.8171-0008.1**	**990049**	ATE
1.4 TSI EcoFuel 1.4 TSI MultiFuel 1.6 TDI 1.8 TSI 2.0 TDI 2.0 TDI 4motion 2.0 TSI 3.6 FSI 4motion	110 118 77 112 - 118 100 - 130 103 - 130 155 220	08/10→12/14 11/10→12/14 08/10→12/14 08/10→12/14 08/10→12/14 08/10→12/14 11/10→12/14 01/11→12/14						
2.0 TDI 4motion	125	08/10→01/13		+PR 1ZM / 1ZG	2	**11.8171-0008.1**	**990049**	ATE
Brake Disc								
1.4 TSI	90 - 118	08/10→12/14	←	→ 10/14; +PR 1ZM / 1ZG		**24.0125-0158.1** **24.0325-0158.1**	**425158** **525158**	Ø 312 Brake Disc Thickness [mm] 25 Minimum thickness [mm] 22 Vented + S Ø 312 Brake Disc Thickness [mm] 25 Minimum thickness [mm] 22 Vented + S
1.4 TSI EcoFuel 1.4 TSI MultiFuel 1.6 TDI 1.8 TSI 2.0 TDI 2.0 TDI 4motion 2.0 TSI 3.6 FSI 4motion	110 118 77 118 100 - 130 103 - 130 155 220	08/10→12/14 11/10→12/14 08/10→12/14 08/10→12/14 08/10→12/14 08/10→12/14 11/10→12/14 01/11→12/14						
			←	→ 10/14; +PR 1LA / 1LB		**24.0130-0225.1**	**430225**	Ø 340 Brake Disc Thickness [mm] 30 Minimum thickness [mm] 27 Vented + S
			→	→ 10/14; +PR 2EA; + eFSB		**24.0122-0219.1**	**422219**	Ø 310 Brake Disc Thickness [mm] 22 Minimum thickness [mm] 20 Vented
1.8 TSI	112	02/11→12/14	←	→ 10/14; +PR 1ZM / 1ZG		**24.0125-0158.1**	**425158**	Ø 312 Brake Disc Thickness [mm] 25 Minimum thickness [mm] 22 Vented + S
			←	→ 10/14; +PR 1LA / 1LB		**24.0130-0225.1**	**430225**	Ø 340 Brake Disc Thickness [mm] 30 Minimum thickness [mm] 27 Vented + S
			→	→ 10/14; +PR 2EA; + eFSB		**24.0122-0219.1**	**422219**	Ø 310 Brake Disc Thickness [mm] 22 Minimum thickness [mm] 20 Vented
2.0 TDI 4motion	125	08/10→01/13	←	+PR 1ZM / 1ZG		**24.0125-0158.1** **24.0325-0158.1**	**425158** **525158**	Ø 312 Brake Disc Thickness [mm] 25 Minimum thickness [mm] 22 Vented + S Ø 312 Brake Disc Thickness [mm] 25 Minimum thickness [mm] 22 Vented + S
			←	+PR 1LA / 1LB		**24.0130-0225.1**	**430225**	Ø 340 Brake Disc Thickness [mm] 30 Minimum thickness [mm] 27 Vented + S
			→	+PR 2EA; + eFSB		**24.0122-0219.1**	**422219**	Ø 310 Brake Disc Thickness [mm] 22 Minimum thickness [mm] 20 Vented

© 2022 Continental Aftermarket & Services GmbH

	kW				! #			
VW - PASSAT B7 (362) 08/10→12/15								
Sensor, wheel speed								
2.0 TDI 4motion	103 - 130	08/10→12/14		→ 10/14;		**24.0711-5401.3**	**360330**	
3.6 FSI 4motion	220	01/11→12/14		→ 10/14;		**24.0711-5402.3**	**360331**	
2.0 TDI 4motion	125	08/10→01/13				**24.0711-5401.3**	**360330**	
						24.0711-5402.3	**360331**	
Slave Cylinder, clutch								
1.4 TSI	90 - 118	08/10→12/14		→ 10/14; +PR 0EM		**24.2519-1706.3**	**040096**	Ø 19
1.4 TSI EcoFuel	110	08/10→12/14						
1.4 TSI MultiFuel	118	11/10→12/14						
1.6 TDI	77	08/10→12/14						
1.8 TSI	112 - 118	08/10→12/14						
2.0 TDI	100 - 130	08/10→12/14						
2.0 TDI 4motion	103 - 130	08/10→12/14						
2.0 TSI	155	11/10→12/14						
3.6 FSI 4motion	220	01/11→12/14						
2.0 TDI 4motion	125	08/10→01/13		+PR 0EM		**24.2519-1706.3**	**040096**	Ø 19
VW - PASSAT B7 (A32, A33) 01/11→								
Brake Caliper								
2.0 TDI	103	04/11→06/15		→ 10/14; +PR 1LA / 1LB;		**24.3601-1727.5**	**240786**	TRW without holder
2.5	125	01/11→		→ 10/14; +PR 1LA / 1LB;		**24.3601-1728.5**	**240787**	TRW without holder
2.0 TDI	110	06/14→		+PR 1LA / 1LB;		**24.3601-1727.5**	**240786**	TRW without holder
				+PR 1LA / 1LB;		**24.3601-1728.5**	**240787**	TRW without holder
Guide Bolt, brake caliper								
2.0 TDI	103	04/11→06/15		→ 10/14; +PR 1ZM / 1ZG	2	**11.8171-0008.1**	**990049**	ATE
2.5	125	01/11→						
2.0 TDI	110	06/14→		+PR 1ZM / 1ZG	2	**11.8171-0008.1**	**990049**	ATE
Brake Disc								
2.0 TDI	103	04/11→06/15		→ 10/14; +PR 1ZM / 1ZG		**24.0125-0158.1**	**425158**	Ø 312 Brake Disc Thickness [mm] 25 Minimum thickness [mm] 22 Vented + S
2.5	125	01/11→						
				→ 10/14; +PR 1LA / 1LB		**24.0130-0225.1**	**430225**	Ø 340 Brake Disc Thickness [mm] 30 Minimum thickness [mm] 27 Vented + S
				→ 10/14; +PR 2EA; + eFSB		**24.0122-0219.1**	**422219**	Ø 310 Brake Disc Thickness [mm] 22 Minimum thickness [mm] 20 Vented
2.0 TDI	110	06/14→		+PR 1ZM / 1ZG		**24.0125-0158.1**	**425158**	Ø 312 Brake Disc Thickness [mm] 25 Minimum thickness [mm] 22 Vented + S
				+PR 1LA / 1LB		**24.0130-0225.1**	**430225**	Ø 340 Brake Disc Thickness [mm] 30 Minimum thickness [mm] 27 Vented + S
				+PR 2EA; + eFSB		**24.0122-0219.1**	**422219**	Ø 310 Brake Disc Thickness [mm] 22 Minimum thickness [mm] 20 Vented
Slave Cylinder, clutch								
2.0 TDI	103	04/11→06/15		→ 10/14; +PR 0EM		**24.2519-1706.3**	**040096**	Ø 19
2.5	125	01/11→						
2.0 TDI	110	06/14→		+PR 0EM		**24.2519-1706.3**	**040096**	Ø 19
VW - PASSAT B7 Estate Van (365) 08/10→12/14								
Brake Caliper								
1.4 TSi BlueMotion	90	08/10→12/14		→ 10/14; +PR 1LA / 1LB;		**24.3601-1727.5**	**240786**	TRW without holder
1.6 TDi BlueMotion	77	08/10→12/14		→ 10/14; +PR 1LA / 1LB;		**24.3601-1728.5**	**240787**	TRW without holder
1.8 TFSi	118	08/10→12/14						
2.0 TDi BlueMotion	103	08/10→12/14						
2.0 TFSI	155	11/10→12/14						
3.6 FSi 4motion	220	01/11→12/14						

	kW				! #			
VW - PASSAT B7 Estate Van (365) 08/10→12/14								
Brake Caliper								
2.0 TDi BlueMotion	125	08/10→12/14	←	+PR 1LA / 1LB;		**24.3601-1727.5**	**240786**	TRW without holder
			←	+PR 1LA / 1LB;		**24.3601-1728.5**	**240787**	TRW without holder
Guide Bolt, brake caliper								
1.4 TSi BlueMotion 1.6 TDi BlueMotion 1.8 TFSi 2.0 TDi BlueMotion 2.0 TFSI 3.6 FSi 4motion	90 77 118 103 155 220	08/10→12/14 08/10→12/14 08/10→12/14 08/10→12/14 11/10→12/14 01/11→12/14		→ 10/14; +PR 1ZM / 1ZG	2	**11.8171-0008.1**	**990049**	ATE
2.0 TDi BlueMotion	125	08/10→12/14		+PR 1ZM / 1ZG	2	**11.8171-0008.1**	**990049**	ATE
Brake Disc								
1.4 TSi BlueMotion 1.6 TDi BlueMotion 1.8 TFSi 2.0 TDi BlueMotion 2.0 TFSI 3.6 FSi 4motion	90 77 118 103 155 220	08/10→12/14 08/10→12/14 08/10→12/14 08/10→12/14 11/10→12/14 01/11→12/14	←	→ 10/14; +PR 1ZM / 1ZG		**24.0125-0158.1**	**425158**	Ø 312 Brake Disc Thickness [mm] 25 Minimum thickness [mm] 22 Vented + S
			←	→ 10/14; +PR 1LA / 1LB		**24.0130-0225.1**	**430225**	Ø 340 Brake Disc Thickness [mm] 30 Minimum thickness [mm] 27 Vented + S
			→	→ 10/14; +PR 2EA; + eFSB		**24.0122-0219.1**	**422219**	Ø 310 Brake Disc Thickness [mm] 22 Minimum thickness [mm] 20 Vented
2.0 TDi BlueMotion	125	08/10→12/14	←	+PR 1ZM / 1ZG		**24.0125-0158.1**	**425158**	Ø 312 Brake Disc Thickness [mm] 25 Minimum thickness [mm] 22 Vented + S
			←	+PR 1LA / 1LB		**24.0130-0225.1**	**430225**	Ø 340 Brake Disc Thickness [mm] 30 Minimum thickness [mm] 27 Vented + S
			→	+PR 2EA; + eFSB		**24.0122-0219.1**	**422219**	Ø 310 Brake Disc Thickness [mm] 22 Minimum thickness [mm] 20 Vented
Sensor, wheel speed								
2.0 TDi BlueMotion 3.6 FSi 4motion	103 220	08/10→12/14 01/11→12/14	→	→ 10/14;		**24.0711-5401.3**	**360330**	
			→	→ 10/14;		**24.0711-5402.3**	**360331**	
2.0 TDi BlueMotion	125	08/10→12/14	→			**24.0711-5401.3**	**360330**	
			→			**24.0711-5402.3**	**360331**	
Slave Cylinder, clutch								
1.4 TSi BlueMotion 1.6 TDi BlueMotion 1.8 TFSi 2.0 TDi BlueMotion 2.0 TFSI 3.6 FSi 4motion	90 77 118 103 155 220	08/10→12/14 08/10→12/14 08/10→12/14 08/10→12/14 11/10→12/14 01/11→12/14		→ 10/14; +PR 0EM		**24.2519-1706.3**	**040096**	Ø 19
2.0 TDi BlueMotion	125	08/10→12/14		+PR 0EM		**24.2519-1706.3**	**040096**	Ø 19
VW - PASSAT B7 Variant (365) 08/10→12/15								
Brake Caliper								
1.4 TSI	90 - 118	08/10→12/14	←	→ 10/14; +PR 1LA / 1LB;		**24.3601-1727.5**	**240786**	TRW without holder
1.4 TSI EcoFuel 1.4 TSI MultiFuel 1.6 TDI 1.8 TSI 2.0 TDI 2.0 TDI 4motion 2.0 TSI 3.6 FSI 4motion	110 118 77 112 - 118 100 - 130 103 - 130 155 220	08/10→12/14 11/10→12/14 08/10→12/14 08/10→12/14 08/10→12/14 08/10→12/14 11/10→12/15 01/11→12/14	←	→ 10/14; +PR 1LA / 1LB;		**24.3601-1728.5**	**240787**	TRW without holder
2.0 TDi 4motion	125	08/10→01/13	←	+PR 1LA / 1LB;		**24.3601-1727.5**	**240786**	TRW without holder
			←	+PR 1LA / 1LB;		**24.3601-1728.5**	**240787**	TRW without holder

© 2022 Continental Aftermarket & Services GmbH

VW - PASSAT B7 Variant (365) 08/10→12/15

Guide Bolt, brake caliper

	kW				! #			
1.4 TSI	90 - 118	08/10→12/14		→ 10/14; +PR 1ZM / 1ZG	2	**11.8171-0008.1**	**990049**	ATE
1.4 TSI EcoFuel	110	08/10→12/14						
1.4 TSI MultiFuel	118	11/10→12/14						
1.6 TDI	77	08/10→12/14						
1.8 TSI	112 - 118	08/10→12/14						
2.0 TDI	100 - 130	08/10→12/14						
2.0 TDI 4motion	103 - 130	08/10→12/14						
2.0 TSI	155	11/10→12/15						
3.6 FSI 4motion	220	01/11→12/14						
2.0 TDI 4motion	125	08/10→01/13		+PR 1ZM / 1ZG	2	**11.8171-0008.1**	**990049**	ATE

Brake Disc

1.4 TSI	90 - 118	08/10→12/14	←	→ 10/14; +PR 1ZM / 1ZG		**24.0125-0158.1**	**425158**	Ø 312 Brake Disc Thickness [mm] 25 Minimum thickness [mm] 22 Vented + S
1.4 TSI EcoFuel	110	08/10→12/14						
1.4 TSI MultiFuel	118	11/10→12/14						
1.6 TDI	77	08/10→12/14				**24.0325-0158.1**	**525158**	Ø 312 Brake Disc Thickness [mm] 25 Minimum thickness [mm] 22 Vented + S
1.8 TSI	118	08/10→12/14						
2.0 TDI	100 - 130	08/10→12/14						
2.0 TDI 4motion	103 - 130	08/10→12/14	←	→ 10/14; +PR 1LA / 1LB		**24.0130-0225.1**	**430225**	Ø 340 Brake Disc Thickness [mm] 30 Minimum thickness [mm] 27 Vented + S
2.0 TSI	155	11/10→12/15						
3.6 FSI 4motion	220	01/11→12/14						
			→	→ 10/14; +PR 2EA; + eFSB		**24.0122-0219.1**	**422219**	Ø 310 Brake Disc Thickness [mm] 22 Minimum thickness [mm] 20 Vented
1.8 TSI	112	02/11→12/14	←	→ 10/14; +PR 1ZM / 1ZG		**24.0125-0158.1**	**425158**	Ø 312 Brake Disc Thickness [mm] 25 Minimum thickness [mm] 22 Vented + S
			←	→ 10/14; +PR 1LA / 1LB		**24.0130-0225.1**	**430225**	Ø 340 Brake Disc Thickness [mm] 30 Minimum thickness [mm] 27 Vented + S
			→	→ 10/14; +PR 2EA; + eFSB		**24.0122-0219.1**	**422219**	Ø 310 Brake Disc Thickness [mm] 22 Minimum thickness [mm] 20 Vented
2.0 TDI 4motion	125	08/10→01/13	←	+PR 1ZM / 1ZG		**24.0125-0158.1**	**425158**	Ø 312 Brake Disc Thickness [mm] 25 Minimum thickness [mm] 22 Vented + S
						24.0325-0158.1	**525158**	Ø 312 Brake Disc Thickness [mm] 25 Minimum thickness [mm] 22 Vented + S
			←	+PR 1LA / 1LB		**24.0130-0225.1**	**430225**	Ø 340 Brake Disc Thickness [mm] 30 Minimum thickness [mm] 27 Vented + S
			→	+PR 2EA; + eFSB		**24.0122-0219.1**	**422219**	Ø 310 Brake Disc Thickness [mm] 22 Minimum thickness [mm] 20 Vented

Sensor, wheel speed

2.0 TDI 4motion	103 - 130	08/10→12/14	→	→ 10/14; ⊞		**24.0711-5401.3**	**360330**	
3.6 FSI 4motion	220	01/11→12/14	→	→ 10/14; ⊞		**24.0711-5402.3**	**360331**	
2.0 TDI 4motion	125	08/10→01/13	→	⊞		**24.0711-5401.3**	**360330**	
			→	⊞		**24.0711-5402.3**	**360331**	

Slave Cylinder, clutch

1.4 TSI	90 - 118	08/10→12/14		→ 10/14; +PR 0EM		**24.2519-1706.3**	**040096**	Ø 19
1.4 TSI EcoFuel	110	08/10→12/14						
1.4 TSI MultiFuel	118	11/10→12/14						
1.6 TDI	77	08/10→12/14						
1.8 TSI	112 - 118	08/10→12/14						

© 2022 Continental Aftermarket & Services GmbH

	kW				! #			
VW - PASSAT B7 Variant (365) 08/10→12/15								
Slave Cylinder, clutch								
2.0 TDI 2.0 TDI 4motion 2.0 TSI 3.6 FSI 4motion	100 - 130 103 - 130 155 220	08/10→12/14 08/10→12/14 11/10→12/15 01/11→12/14		→ 10/14; +PR 0EM		**24.2519-1706.3**	**040096**	Ø 19
2.0 TDI 4motion	125	08/10→01/13		+PR 0EM		**24.2519-1706.3**	**040096**	Ø 19
VW - PASSAT B8 (3G2, CB2) 08/14→								
Brake Master Cylinder								
1.4 GTE Hybrid 1.4 TSI 1.4 TSI 4motion 1.5 TSI 1.6 TDI 1.8 TSI 2.0 TDI 2.0 TDI 4motion 2.0 TSI 2.0 TSI 4motion	115 92 - 110 110 110 88 132 81 - 147 110 - 176 140 - 162 200 - 206	06/15→11/18 11/14→ 02/15→ 08/18→ 08/14→ 02/15→ 11/14→ 08/14→ 02/15→ 05/15→		for left-hand drive vehicles; +PR 1ZA / 1ZD		**24.4123-1719.3**	**011017**	TRW Ø 23.8 without brake fluid reservoir
Brake Caliper								
1.4 GTE Hybrid 1.4 TSI 1.4 TSI 4motion 1.5 TSI 1.8 TSI 2.0 TDI 2.0 TDI 4motion 2.0 TSI 2.0 TSI 4motion	115 92 - 110 110 110 132 81 - 147 140 - 147 140 - 162 200 - 206	06/15→11/18 11/14→ 02/15→ 08/18→ 02/15→ 11/14→ 11/14→ 02/15→ 05/15→	←	+PR 1ZA / 1ZD / 1ZK / 1ZL;		**24.3571-1801.5**	**241387**	without holder
			←	+PR 1ZA / 1ZD / 1ZK / 1ZL;		**24.3571-1802.5**	**241388**	without holder
			←	+PR 1LA / 1LB;		**24.3601-1727.5**	**240786**	TRW without holder
			←	+PR 1LA / 1LB;		**24.3601-1728.5**	**240787**	TRW without holder
			→	+PR 1KZ;		**24.6242-7001.5**	**241335**	ATE + EMot / without holder + eFSB
			→	+PR 1KZ;		**24.6242-7002.5**	**241336**	ATE + EMot / without holder + eFSB
			→	+PR 2EA;		**24.6242-7005.5**	**241337**	ATE + EMot / without holder + eFSB
			→	+PR 1KU;		**24.6242-7005.5**	**241337**	ATE + EMot / without holder + eFSB
			→	+PR 2EA;		**24.6242-7006.5**	**241338**	ATE + EMot / without holder + eFSB
			→	+PR 1KU;		**24.6242-7006.5**	**241338**	ATE + EMot / without holder + eFSB
1.6 TDI 2.0 TDI 4motion	88 110 - 176	08/14→ 08/14→	←	11/14→; +PR 1ZA / 1ZD / 1ZK / 1ZL;		**24.3571-1801.5**	**241387**	without holder
			←	11/14→; +PR 1ZA / 1ZD / 1ZK / 1ZL;		**24.3571-1802.5**	**241388**	without holder
			←	+PR 1LA / 1LB;		**24.3601-1727.5**	**240786**	TRW without holder
			←	+PR 1LA / 1LB;		**24.3601-1728.5**	**240787**	TRW without holder
			→	11/14→; +PR 1KZ;		**24.6242-7001.5**	**241335**	ATE + EMot / without holder + eFSB
			→	11/14→; +PR 1KZ;		**24.6242-7002.5**	**241336**	ATE + EMot / without holder + eFSB
			→	11/14→; +PR 1KU;		**24.6242-7005.5**	**241337**	ATE + EMot / without holder + eFSB
			→	11/14→; +PR 2EA;		**24.6242-7005.5**	**241337**	ATE + EMot / without holder + eFSB
			→	11/14→; +PR 1KU;		**24.6242-7006.5**	**241338**	ATE + EMot / without holder + eFSB
			→	11/14→; +PR 2EA;		**24.6242-7006.5**	**241338**	ATE + EMot / without holder + eFSB
Brake Pad Set, disc brake								
1.4 GTE Hybrid 1.4 TSI 1.4 TSI 4motion 1.5 TSI 1.8 TSI 2.0 TDI 2.0 TDI 4motion	115 92 - 110 110 110 132 81 - 147 110 - 147	06/15→11/18 11/14→ 02/15→ 08/18→ 02/15→ 11/14→ 08/14→	←	+PR 1LA		**13.0460-2617.2** **13.0470-2617.2**	**602617** **LD2617**	TRW + WK TRW + WK Ceramic
			←	+PR 1ZA / 1ZC / 1ZD / 1ZG / 1ZK / 1ZL		**13.0460-2785.2** **13.0470-2785.2**	**602785** **LD2785**	TRW 25683 20,4 + WE / + WK TRW 25683 20,4 + WE / + WK Ceramic
			→	+PR 1KU / 1KZ / 2EA / 2ER; + eFSB		**13.0460-7294.2** **13.0470-7294.2**	**607294** **LD7294**	ATE 25009 16,4 - WE / - WK ATE 25009 16,4 - WE / - WK Ceramic

© 2022 Continental Aftermarket & Services GmbH

	kW				! #			
VW - PASSAT B8 (3G2, CB2) 08/14→								
Brake Pad Set, disc brake								
2.0 TSI 2.0 TSI 4motion	140 - 162 200 - 206	02/15→ 05/15→	←	+PR 1LA		**13.0460-2617.2** **13.0470-2617.2**	**602617** **LD2617**	TRW + WK TRW + WK Ceramic
			←	+PR 1ZA / 1ZC / 1ZD / 1ZG / 1ZK / 1ZL		**13.0460-2785.2** **13.0470-2785.2**	**602785** **LD2785**	TRW 25683 20,4 + WE / + WK TRW 25683 20,4 + WE / + WK Ceramic
			→	+PR 1KU / 1KZ / 2EA / 2ER; + eFSB		**13.0460-7294.2** **13.0470-7294.2**	**607294** **LD7294**	ATE 25009 16,4 - WE / - WK ATE 25009 16,4 - WE / - WK Ceramic
1.6 TDI 2.0 TDI 4motion	88 176	08/14→ 08/14→	←	+PR 1LA		**13.0460-2617.2**	**602617**	TRW + WK
			←	+PR 1ZA / 1ZC / 1ZD / 1ZG / 1ZK / 1ZL		**13.0460-2785.2** **13.0470-2785.2**	**602785** **LD2785**	TRW 25683 20,4 + WE / + WK TRW 25683 20,4 + WE / + WK Ceramic
			←	11/14→; +PR 1LA		**13.0470-2617.2**	**LD2617**	TRW + WK Ceramic
			→	+PR 1KU / 1KZ / 2EA / 2ER; + eFSB		**13.0460-7294.2** **13.0470-7294.2**	**607294** **LD7294**	ATE 25009 16,4 - WE / - WK ATE 25009 16,4 - WE / - WK Ceramic
Warning Contact, brake pad wear								
1.4 GTE Hybrid 1.4 TSI 1.4 TSI 4motion 1.5 TSI 1.6 TDI 1.8 TSI 2.0 TDI 2.0 TDI 4motion 2.0 TSI 2.0 TSI 4motion	115 92 - 110 110 110 88 132 81 - 140 110 - 176 162 206	06/15→11/18 11/14→ 02/15→ 08/18→ 08/14→ 02/15→ 11/14→ 08/14→ 02/15→ 05/15→	←	+PR 1LA	1	**24.8190-0065.2**	**620065**	
			←	+PR 1ZA / 1ZC / 1ZD / 1ZG / 1ZK / 1ZL	1	**24.8190-0065.2**	**620065**	
2.0 TDI 2.0 TDI 4motion 2.0 TSI 2.0 TSI 4motion	90 - 147 147 140 200	07/20→ 08/20→ 11/18→ 09/18→	←	+PR 1ZA / 1ZC / 1ZD / 1ZG / 1LA / 1ZK / 1ZL	1	**24.8190-0065.2**	**620065**	
Brake Disc								
1.4 GTE Hybrid 1.4 TSI 1.4 TSI 4motion 1.5 TSI 1.6 TDI 1.8 TSI 2.0 TDI 2.0 TDI 4motion 2.0 TSI 2.0 TSI 4motion	115 92 - 110 110 110 88 132 81 - 147 110 - 176 140 - 162 200 - 206	06/15→11/18 11/14→ 02/15→ 08/18→ 08/14→ 02/15→ 11/14→ 08/14→ 02/15→ 05/15→	←	+PR 1ZA / 1ZC / 1ZD / 1ZG / 1ZK / 1ZL		**24.0125-0158.1** **24.0325-0158.1**	**425158** **525158**	Ø 312 Brake Disc Thickness [mm] 25 Minimum thickness [mm] 22 Vented + S Ø 312 Brake Disc Thickness [mm] 25 Minimum thickness [mm] 22 Vented + S
			←	+PR 1LA / 1LB		**24.0130-0225.1**	**430225**	Ø 340 Brake Disc Thickness [mm] 30 Minimum thickness [mm] 27 Vented + S
			→	+PR 1KU / 2EA; + eFSB		**24.0112-0210.1**	**412210**	Ø 300 Brake Disc Thickness [mm] 12 Minimum thickness [mm] 10 + S
			→	+PR 1KZ		**24.0122-0219.1**	**422219**	Ø 310 Brake Disc Thickness [mm] 22 Minimum thickness [mm] 20 Vented
2.0 TDI	135	07/15→	←	+PR 1ZA / 1ZC / 1ZD / 1ZG / 1ZK / 1ZL		**24.0125-0158.1**	**425158**	Ø 312 Brake Disc Thickness [mm] 25 Minimum thickness [mm] 22 Vented + S
			←	+PR 1LA / 1LB		**24.0130-0225.1**	**430225**	Ø 340 Brake Disc Thickness [mm] 30 Minimum thickness [mm] 27 Vented + S
			→	+PR 1KU / 2EA; + eFSB		**24.0112-0210.1**	**412210**	Ø 300 Brake Disc Thickness [mm] 12 Minimum thickness [mm] 10 + S
			→	+PR 1KZ		**24.0122-0219.1**	**422219**	Ø 310 Brake Disc Thickness [mm] 22 Minimum thickness [mm] 20 Vented

	kW				! #			
VW - PASSAT B8 (3G2, CB2) 08/14→								
Sensor, wheel speed								
1.4 GTE Hybrid 1.4 TSI 1.5 TSI 1.6 TDI 1.8 TSI 2.0 TDI 2.0 TSI	115 92 - 110 110 88 132 81 - 140 162	06/15→11/18 11/14→ 08/18→ 08/14→ 02/15→ 11/14→ 02/15→	←			**24.0711-5273.3**	**360303**	
			←			**24.0711-5274.3**	**360304**	
			→		2	**24.0711-6337.3**	**360390**	
1.4 TSI 4motion 2.0 TDI 4motion 2.0 TSI 4motion	110 110 - 140 200 - 206	02/15→ 08/14→ 05/15→	←			**24.0711-5273.3**	**360303**	
			←			**24.0711-5274.3**	**360304**	
			→			**24.0711-5401.3**	**360330**	
			→	12/19→;		**24.0711-5401.3**	**360330**	
			→			**24.0711-5402.3**	**360331**	
			→	12/19→;		**24.0711-5402.3**	**360331**	
2.0 TDI 2.0 TDI 4motion 2.0 TSI	90 - 147 147 140	07/20→ 08/20→ 11/18→	←			**24.0711-5273.3**	**360303**	
			←			**24.0711-5274.3**	**360304**	
			→			**24.0711-5401.3**	**360330**	
			→			**24.0711-5402.3**	**360331**	
2.0 TDI 4motion	176	08/14→	←			**24.0711-5273.3**	**360303**	
			←			**24.0711-5274.3**	**360304**	
			→	12/19→;		**24.0711-5401.3**	**360330**	
			→	11/14→;		**24.0711-5401.3**	**360330**	
			→	11/14→;		**24.0711-5402.3**	**360331**	
			→	12/19→;		**24.0711-5402.3**	**360331**	
Slave Cylinder, clutch								
1.4 GTE Hybrid 1.4 TSI 1.4 TSI 4motion 1.5 TSI 1.6 TDI 1.8 TSI 2.0 TDI 2.0 TDI 4motion 2.0 TSI 2.0 TSI 4motion	115 92 - 110 110 110 88 132 81 - 147 110 - 176 140 - 162 200 - 206	06/15→11/18 11/14→ 02/15→ 08/18→ 08/14→ 02/15→ 11/14→ 08/14→ 02/15→ 05/15→		+PR 0EJ		**24.2519-1706.3**	**040096**	Ø 19
Control Element, parking brake caliper								
1.4 GTE Hybrid 1.4 TSI 1.4 TSI 4motion 1.5 TSI 1.6 TDI 1.8 TSI 2.0 TDI 2.0 TDI 4motion 2.0 TSI 2.0 TSI 4motion	115 92 - 110 110 110 88 132 81 - 147 110 - 176 140 - 162 200 - 206	06/15→11/18 11/14→ 02/15→ 08/18→ 08/14→ 02/15→ 11/14→ 08/14→ 02/15→ 05/15→	→	+PR 1KU / 1KZ / 2EA;		**11.9282-1001.3**	**250159**	ATE
			→	+PR 1KU / 1KZ / 2EA;		**11.9282-1002.3**	**250160**	ATE
VW - PASSAT B8 Variant (3G5, CB5) 08/14→								
Brake Master Cylinder								
1.4 GTE Hybrid 1.4 TSI 1.4 TSI 4motion 1.5 TSI 1.6 TDI 1.8 TSI 2.0 TDI 2.0 TDI 4motion	115 92 - 110 110 110 88 132 90 - 147 110 - 176	06/15→ 11/14→ 02/15→ 08/18→ 08/14→ 02/15→ 11/14→ 08/14→		for left-hand drive vehicles; +PR 1ZA / 1ZD		**24.4123-1719.3**	**011017**	TRW Ø 23.8 without brake fluid reservoir

© 2022 Continental Aftermarket & Services GmbH

VW - PASSAT B8 Variant (3G5, CB5) 08/14→

Brake Master Cylinder

	kW				! #			
2.0 TSI 2.0 TSI 4motion	140 - 162 200 - 206	08/14→ 05/15→		for left-hand drive vehicles; +PR 1ZA / 1ZD		**24.4123-1719.3**	**011017**	TRW Ø 23.8 without brake fluid reservoir

Brake Caliper

	kW				! #			
1.4 GTE Hybrid 1.4 TSI 1.4 TSI 4motion 1.5 TSI 1.8 TSI 2.0 TDI 2.0 TDI 4motion 2.0 TSI 2.0 TSI 4motion	115 92 - 110 110 110 132 90 - 147 140 - 147 140 200 - 206	06/15→ 11/14→ 02/15→ 08/18→ 02/15→ 11/14→ 11/14→ 11/18→ 05/15→	←	+PR 1ZA / 1ZD / 1ZK / 1ZL;		**24.3571-1801.5**	**241387**	without holder
			←	+PR 1ZA / 1ZD / 1ZK / 1ZL;		**24.3571-1802.5**	**241388**	without holder
			←	+PR 1LA / 1LB;		**24.3601-1727.5**	**240786**	TRW without holder
			←	+PR 1LA / 1LB;		**24.3601-1728.5**	**240787**	TRW without holder
			→	+PR 1KZ;		**24.6242-7001.5**	**241335**	ATE + EMot / without holder + eFSB
			→	+PR 1KZ;		**24.6242-7002.5**	**241336**	ATE + EMot / without holder + eFSB
			→	+PR 2EA;		**24.6242-7005.5**	**241337**	ATE + EMot / without holder + eFSB
			→	+PR 1KU;		**24.6242-7005.5**	**241337**	ATE + EMot / without holder + eFSB
			→	+PR 1KU;		**24.6242-7006.5**	**241338**	ATE + EMot / without holder + eFSB
			→	+PR 2EA;		**24.6242-7006.5**	**241338**	ATE + EMot / without holder + eFSB
1.6 TDI 2.0 TDI 4motion 2.0 TSI	88 110 - 176 162	08/14→ 08/14→ 08/14→	←	11/14→; +PR 1ZA / 1ZD / 1ZK / 1ZL;		**24.3571-1801.5**	**241387**	without holder
			←	11/14→; +PR 1ZA / 1ZD / 1ZK / 1ZL;		**24.3571-1802.5**	**241388**	without holder
			←	+PR 1LA / 1LB;		**24.3601-1727.5**	**240786**	TRW without holder
			←	+PR 1LA / 1LB;		**24.3601-1728.5**	**240787**	TRW without holder
			→	11/14→; +PR 1KZ;		**24.6242-7001.5**	**241335**	ATE + EMot / without holder + eFSB
			→	11/14→; +PR 1KZ;		**24.6242-7002.5**	**241336**	ATE + EMot / without holder + eFSB
			→	11/14→; +PR 2EA;		**24.6242-7005.5**	**241337**	ATE + EMot / without holder + eFSB
			→	11/14→; +PR 1KU;		**24.6242-7005.5**	**241337**	ATE + EMot / without holder + eFSB
			→	11/14→; +PR 1KU;		**24.6242-7006.5**	**241338**	ATE + EMot / without holder + eFSB
			→	11/14→; +PR 2EA;		**24.6242-7006.5**	**241338**	ATE + EMot / without holder + eFSB

Brake Pad Set, disc brake

	kW				! #			
1.4 GTE Hybrid 1.4 TSI 1.4 TSI 4motion 1.5 TSI 1.8 TSI 2.0 TDI 2.0 TDI 4motion 2.0 TSI 2.0 TSI 4motion	115 92 - 110 110 110 132 90 - 147 110 - 147 140 - 162 200 - 206	06/15→ 11/14→ 02/15→ 08/18→ 02/15→ 11/14→ 08/14→ 08/14→ 05/15→	←	+PR 1LA		**13.0460-2617.2** **13.0470-2617.2**	**602617** **LD2617**	TRW + WK TRW + WK Ceramic
			←	+PR 1ZA / 1ZC / 1ZD / 1ZG / 1ZK / 1ZL		**13.0460-2785.2** **13.0470-2785.2**	**602785** **LD2785**	TRW 25683 20,4 + WE / + WK TRW 25683 20,4 + WE / + WK Ceramic
			→	+PR 1KU / 1KZ / 2EA / 2ER; + eFSB		**13.0460-7294.2** **13.0470-7294.2**	**607294** **LD7294**	ATE 25009 16,4 - WE / - WK ATE 25009 16,4 - WE / - WK Ceramic
1.6 TDI 2.0 TDI 4motion	88 176	08/14→ 08/14→	←	+PR 1LA		**13.0460-2617.2**	**602617**	TRW + WK
			←	+PR 1ZA / 1ZC / 1ZD / 1ZG / 1ZK / 1ZL		**13.0460-2785.2** **13.0470-2785.2**	**602785** **LD2785**	TRW 25683 20,4 + WE / + WK TRW 25683 20,4 + WE / + WK Ceramic
			←	11/14→; +PR 1LA		**13.0470-2617.2**	**LD2617**	TRW + WK Ceramic
			→	+PR 1KU / 1KZ / 2EA / 2ER; + eFSB		**13.0460-7294.2** **13.0470-7294.2**	**607294** **LD7294**	ATE 25009 16,4 - WE / - WK ATE 25009 16,4 - WE / - WK Ceramic

Warning Contact, brake pad wear

	kW				! #			
1.4 GTE Hybrid 1.4 TSI 1.4 TSI 4motion 1.5 TSI 1.6 TDI 1.8 TSI	115 92 - 110 110 110 88 132	06/15→ 11/14→ 02/15→ 08/18→ 08/14→ 02/15→	←	+PR 1ZA / 1ZC / 1ZD / 1ZG / 1ZK / 1ZL	1	**24.8190-0065.2**	**620065**	
			←	+PR 1LA	1	**24.8190-0065.2**	**620065**	

© 2022 Continental Aftermarket & Services GmbH

VW - PASSAT B8 Variant (3G5, CB5) 08/14→

Warning Contact, brake pad wear

	kW				! #			
2.0 TDI	110 - 140	11/14→	←	+PR 1ZA / 1ZC / 1ZD / 1ZG / 1ZK / 1ZL	1	**24.8190-0065.2**	**620065**	
2.0 TDI 4motion	110 - 176	08/14→	←	+PR 1LA	1	**24.8190-0065.2**	**620065**	
2.0 TSI	162	08/14→						
2.0 TSI 4motion	206	05/15→						
2.0 TDI	90 - 147	07/20→	←	+PR 1ZA / 1ZC / 1ZD / 1ZG / 1LA / 1ZK / 1ZL	1	**24.8190-0065.2**	**620065**	
2.0 TDI 4motion	147	08/20→						
2.0 TSI	140	11/18→						
2.0 TSI 4motion	200	09/18→						

Brake Disc

1.4 GTE Hybrid	115	06/15→	←	+PR 1ZA / 1ZC / 1ZD / 1ZG / 1ZK / 1ZL		**24.0125-0158.1**	**425158**	Ø 312 Brake Disc Thickness [mm] 25 Minimum thickness [mm] 22 Vented + S
1.4 TSI	92 - 110	11/14→						
1.4 TSI 4motion	110	02/15→						
1.5 TSI	110	08/18→						
1.6 TDI	88	08/14→				**24.0325-0158.1**	**525158**	Ø 312 Brake Disc Thickness [mm] 25 Minimum thickness [mm] 22 Vented + S
1.8 TSI	132	02/15→						
2.0 TDI	90 - 147	11/14→						
2.0 TDI 4motion	110 - 176	08/14→	←	+PR 1LA / 1LB		**24.0130-0225.1**	**430225**	Ø 340 Brake Disc Thickness [mm] 30 Minimum thickness [mm] 27 Vented + S
2.0 TSI	140 - 162	08/14→						
2.0 TSI 4motion	200 - 206	05/15→	→	+PR 1KU / 2EA; + eFSB		**24.0112-0210.1**	**412210**	Ø 300 Brake Disc Thickness [mm] 12 Minimum thickness [mm] 10 + S
			→	+PR 1KZ		**24.0122-0219.1**	**422219**	Ø 310 Brake Disc Thickness [mm] 22 Minimum thickness [mm] 20 Vented
2.0 TDI	135	07/15→	←	+PR 1ZA / 1ZC / 1ZD / 1ZG / 1ZK / 1ZL		**24.0125-0158.1**	**425158**	Ø 312 Brake Disc Thickness [mm] 25 Minimum thickness [mm] 22 Vented + S
			←	+PR 1LA / 1LB		**24.0130-0225.1**	**430225**	Ø 340 Brake Disc Thickness [mm] 30 Minimum thickness [mm] 27 Vented + S
			→	+PR 1KU / 2EA; + eFSB		**24.0112-0210.1**	**412210**	Ø 300 Brake Disc Thickness [mm] 12 Minimum thickness [mm] 10 + S
			→	+PR 1KZ		**24.0122-0219.1**	**422219**	Ø 310 Brake Disc Thickness [mm] 22 Minimum thickness [mm] 20 Vented

Sensor, wheel speed

1.4 GTE Hybrid	115	06/15→	←			**24.0711-5273.3**	**360303**	
1.4 TSI	92 - 110	11/14→	←			**24.0711-5274.3**	**360304**	
1.5 TSI	110	08/18→	→		2	**24.0711-6337.3**	**360390**	
1.6 TDI	88	08/14→						
1.8 TSI	132	02/15→						
2.0 TDI	110 - 140	11/14→						
2.0 TSI	162	08/14→						
1.4 TSI 4motion	110	02/15→	←			**24.0711-5273.3**	**360303**	
2.0 TDI 4motion	110 - 140	08/14→	←			**24.0711-5274.3**	**360304**	
2.0 TSI 4motion	200 - 206	05/15→	→			**24.0711-5401.3**	**360330**	
			→	12/19→;		**24.0711-5401.3**	**360330**	
			→			**24.0711-5402.3**	**360331**	
			→	12/19→;		**24.0711-5402.3**	**360331**	
2.0 TDI	90 - 147	07/20→	←			**24.0711-5273.3**	**360303**	
2.0 TDI 4motion	147	08/20→	←			**24.0711-5274.3**	**360304**	
2.0 TSI	140	11/18→	→			**24.0711-5401.3**	**360330**	
			→			**24.0711-5402.3**	**360331**	
2.0 TDI 4motion	176	08/14→	←			**24.0711-5273.3**	**360303**	
			←			**24.0711-5274.3**	**360304**	
			→	12/19→;		**24.0711-5401.3**	**360330**	
			→	11/14→;		**24.0711-5401.3**	**360330**	

© 2022 Continental Aftermarket & Services GmbH

	kW				! #			
VW - PASSAT B8 Variant (3G5, CB5) 08/14→								
Sensor, wheel speed								
2.0 TDI 4motion	176	08/14→	➡	12/19→;		**24.0711-5402.3**	**360331**	
			➡	11/14→;		**24.0711-5402.3**	**360331**	
Slave Cylinder, clutch								
1.4 GTE Hybrid	115	06/15→		+PR 0EJ		**24.2519-1706.3**	**040096**	Ø 19
1.4 TSI	92 - 110	11/14→						
1.4 TSI 4motion	110	02/15→						
1.5 TSI	110	08/18→						
1.6 TDI	88	08/14→						
1.8 TSI	132	02/15→						
2.0 TDI	90 - 147	11/14→						
2.0 TDI 4motion	110 - 176	08/14→						
2.0 TSI	140 - 162	08/14→						
2.0 TSI 4motion	200 - 206	05/15→						
Control Element, parking brake caliper								
1.4 GTE Hybrid	115	06/15→	➡	+PR 1KU / 1KZ / 2EA;		**11.9282-1001.3**	**250159**	ATE
1.4 TSI	92 - 110	11/14→	➡	+PR 1KU / 1KZ / 2EA;		**11.9282-1002.3**	**250160**	ATE
1.4 TSI 4motion	110	02/15→						
1.5 TSI	110	08/18→						
1.6 TDI	88	08/14→						
1.8 TSI	132	02/15→						
2.0 TDI	90 - 147	11/14→						
2.0 TDI 4motion	110 - 176	08/14→						
2.0 TSI	140 - 162	08/14→						
2.0 TSI 4motion	200 - 206	05/15→						
VW - PASSAT CC B6 (357) 02/08→01/12								
Brake Caliper								
1.4 TSI MultiFuel	118	01/11→01/12	⬅	→ 09/11; +PR 1LA / 1LB;		**24.3601-1727.5**	**240786**	TRW without holder
1.8 TSI	118	06/08→01/12	⬅	→ 09/11; +PR 1LA / 1LB;		**24.3601-1728.5**	**240787**	TRW without holder
2.0 TDI	103 - 125	06/08→01/12						
2.0 TDI 4motion	103 - 125	08/09→01/12						
2.0 TFSI	147	06/08→01/12						
2.0 TSI	155	11/10→01/12						
3.6 FSI 4motion	206	06/08→01/12						
1.8 TSI	112	11/08→05/10	⬅	+PR 1LA / 1LB;		**24.3601-1727.5**	**240786**	TRW without holder
2.0 BlueTDI	105	05/09→11/10	⬅	+PR 1LA / 1LB;		**24.3601-1728.5**	**240787**	TRW without holder
2.0 TDI	100 - 120	05/08→05/11						
3.6 FSI 4motion	220	02/08→12/11						
Guide Bolt, brake caliper								
1.4 TSI MultiFuel	118	01/11→01/12		→ 09/11; +PR 1LH / 1ZM / 1ZG	2	**11.8171-0008.1**	**990049**	ATE
1.8 TSI	118	06/08→01/12		→ 09/11; +PR 1LK	2	**11.8171-0008.1**	**990049**	ATE
2.0 TDI	103 - 125	06/08→01/12						
2.0 TDI 4motion	103 - 125	08/09→01/12						
2.0 TFSI	147	06/08→01/12						
2.0 TSI	155	11/10→01/12						
3.6 FSI 4motion	206	06/08→01/12						
1.8 TSI	112	11/08→05/10		+PR 1LH / 1ZM / 1ZG	2	**11.8171-0008.1**	**990049**	ATE
2.0 BlueTDI	105	05/09→11/10		+PR 1LK	2	**11.8171-0008.1**	**990049**	ATE
2.0 TDI	100 - 120	05/08→05/11						
3.6 FSI 4motion	220	02/08→12/11						
Brake Disc								
1.4 TSI MultiFuel	118	01/11→01/12	⬅	→ 09/11; +PR 1LH / 1ZM / 1ZG		**24.0125-0158.1**	**425158**	Ø 312 Brake Disc Thickness [mm] 25 Minimum thickness [mm] 22 Vented + S
1.8 TSI	118	06/08→01/12						
2.0 TDI	103 - 125	06/08→01/12						
2.0 TDI 4motion	103 - 125	08/09→01/12				**24.0325-0158.1**	**525158**	Ø 312 Brake Disc Thickness [mm] 25 Minimum thickness [mm] 22 Vented + S
2.0 TFSI	147	06/08→01/12						
2.0 TSI	155	11/10→01/12						

	kW				! #			
VW - PASSAT CC B6 (357) 02/08→01/12								
Brake Disc								
1.4 TSI MultiFuel 1.8 TSI 2.0 TDI	118 118 103 - 125	01/11→01/12 06/08→01/12 06/08→01/12	←	→ 09/11; +PR 1LA / 1LB		**24.0130-0225.1**	**430225**	Ø 340 Brake Disc Thickness [mm] 30 Minimum thickness [mm] 27 Vented + S
2.0 TDI 4motion 2.0 TFSI 2.0 TSI	103 - 125 147 155	08/09→01/12 06/08→01/12 11/10→01/12	→	→ 09/11; +PR 2EA; + eFSB		**24.0122-0219.1**	**422219**	Ø 310 Brake Disc Thickness [mm] 22 Minimum thickness [mm] 20 Vented
1.8 TSI 2.0 TDI	112 120	11/08→05/10 05/08→05/11	←	+PR 1LH / 1ZM / 1ZG		**24.0125-0158.1**	**425158**	Ø 312 Brake Disc Thickness [mm] 25 Minimum thickness [mm] 22 Vented + S
			←	+PR 1LA / 1LB		**24.0130-0225.1**	**430225**	Ø 340 Brake Disc Thickness [mm] 30 Minimum thickness [mm] 27 Vented + S
			→	+PR 2EA; + eFSB		**24.0122-0219.1**	**422219**	Ø 310 Brake Disc Thickness [mm] 22 Minimum thickness [mm] 20 Vented
2.0 BlueTDI 2.0 TDI 3.6 FSI 4motion	105 100 220	05/09→11/10 06/08→05/11 02/08→12/11	←	+PR 1LH / 1ZM / 1ZG		**24.0125-0158.1** **24.0325-0158.1**	**425158** **525158**	Ø 312 Brake Disc Thickness [mm] 25 Minimum thickness [mm] 22 Vented + S Ø 312 Brake Disc Thickness [mm] 25 Minimum thickness [mm] 22 Vented + S
			←	+PR 1LA / 1LB		**24.0130-0225.1**	**430225**	Ø 340 Brake Disc Thickness [mm] 30 Minimum thickness [mm] 27 Vented + S
			→	+PR 2EA; + eFSB		**24.0122-0219.1**	**422219**	Ø 310 Brake Disc Thickness [mm] 22 Minimum thickness [mm] 20 Vented
3.6 FSI 4motion	206	06/08→01/12	←	→ 09/11; +PR 1LH / 1ZM / 1ZG		**24.0125-0158.1**	**425158**	Ø 312 Brake Disc Thickness [mm] 25 Minimum thickness [mm] 22 Vented + S
			←	→ 09/11; +PR 1LA / 1LB		**24.0130-0225.1**	**430225**	Ø 340 Brake Disc Thickness [mm] 30 Minimum thickness [mm] 27 Vented + S
			→	→ 09/11; +PR 2EA; + eFSB		**24.0122-0219.1**	**422219**	Ø 310 Brake Disc Thickness [mm] 22 Minimum thickness [mm] 20 Vented
VW - POLO (9N_, 9A_) 10/01→10/14								
Brake Master Cylinder								
1.2 1.4 16V 1.4 FSI 1.4 TDI 1.6 1.6 Flex	40 55 - 74 63 55 74 74	01/02→05/07 10/01→05/08 02/02→07/06 10/01→06/05 08/02→05/05 06/08→04/09		9N-5-500001→; + ABS		**24.2119-1712.3**	**010912**	Ø 19 without brake fluid reservoir
1.2 1.2 12V 1.8 GTI	44 51 110	05/07→11/09 05/07→11/09 09/05→11/09		→ 05/09; + ABS		**24.2119-1712.3**	**010912**	Ø 19 without brake fluid reservoir
1.2 12V	47	10/01→07/07		11/01→; + ABS		**24.2119-1712.3**	**010912**	Ø 19 without brake fluid reservoir
1.4 1.4 16V 1.4 BiFuel 1.4 TDI 1.6 16V 1.9 SDI 1.9 TDI	61 59 60 51 - 59 77 47 74 - 96	08/02→11/09 05/06→11/09 05/06→11/09 04/05→11/09 05/06→11/09 10/01→11/09 10/01→11/09		9N-5-500001→; → 05/09; + ABS		**24.2119-1712.3**	**010912**	Ø 19 without brake fluid reservoir
1.8 GTi Cup Edition	132	05/06→11/09		06/06→ 05/09; + ABS		**24.2119-1712.3**	**010912**	Ø 19 without brake fluid reservoir
Guide Bolt, brake caliper								
1.2 1.4 FSI 1.6	40 63 74	01/02→05/07 02/02→07/06 08/02→05/05		+PR 1LJ	2	**11.8171-0008.1**	**990049**	ATE

© 2022 Continental Aftermarket & Services GmbH

	kW				! #			
VW - POLO (9N_, 9A_) 10/01→10/14								
Guide Bolt, brake caliper								
1.6 Flex	74	06/08→04/09		+PR 1LJ	2	**11.8171-0008.1**	**990049**	ATE
1.2 1.2 12V 1.4 16V 1.4 BiFuel 1.4 TDI 1.6 16V 1.8 GTI 1.9 TDI	44 51 59 60 51 - 59 77 110 96	05/07→11/09 05/07→11/09 05/06→11/09 05/06→11/09 04/05→11/09 05/06→11/09 09/05→11/09 11/03→11/09		→ 05/09; +PR 1LJ	2	**11.8171-0008.1**	**990049**	ATE
1.2 12V 1.4 16V 1.4 TDI	47 55 - 74 55	10/01→07/07 10/01→05/08 10/01→06/05		11/01→; +PR 1LJ	2	**11.8171-0008.1**	**990049**	ATE
1.4	61	08/02→11/09		05/06→ 05/09; +PR 1LJ	2	**11.8171-0008.1**	**990049**	ATE
1.8 GTi Cup Edition	132	05/06→11/09		06/06→ 05/09; +PR 1LJ	2	**11.8171-0008.1**	**990049**	ATE
1.9 SDI 1.9 TDI	47 74	10/01→11/09 10/01→11/09		11/01→ 05/09; +PR 1LJ	2	**11.8171-0008.1**	**990049**	ATE
Brake Disc								
1.2 1.4 FSI 1.6 1.6 Flex	40 63 74 74	01/02→05/07 02/02→07/06 08/02→05/05 06/08→04/09	➡	+PR 1KD / 1KS / 1KT / 1KV		**24.0109-0123.1**	**409123**	Ø 230 Brake Disc Thickness [mm] 9 Minimum thickness [mm] 7 + S
1.2 1.2 12V 1.4 16V 1.4 BiFuel 1.4 TDI 1.6 16V 1.8 GTI 1.9 TDI	44 51 59 60 51 - 59 77 110 96	05/07→11/09 05/07→11/09 05/06→11/09 05/06→11/09 04/05→11/09 05/06→11/09 09/05→11/09 11/03→11/09	➡	→ 05/09; +PR 1KD / 1KS / 1KT / 1KV		**24.0109-0123.1**	**409123**	Ø 230 Brake Disc Thickness [mm] 9 Minimum thickness [mm] 7 + S
1.2 12V 1.4 16V 1.4 TDI	47 55 - 74 55	10/01→07/07 10/01→05/08 10/01→06/05	➡	11/01→; +PR 1KD / 1KS / 1KT / 1KV		**24.0109-0123.1**	**409123**	Ø 230 Brake Disc Thickness [mm] 9 Minimum thickness [mm] 7 + S
1.4	61	08/02→11/09	➡	05/06→ 05/09; +PR 1KD / 1KS / 1KT / 1KV		**24.0109-0123.1**	**409123**	Ø 230 Brake Disc Thickness [mm] 9 Minimum thickness [mm] 7 + S
1.8 GTi Cup Edition	132	05/06→11/09	➡	06/06→ 05/09; +PR 1KD / 1KS / 1KT / 1KV		**24.0109-0123.1**	**409123**	Ø 230 Brake Disc Thickness [mm] 9 Minimum thickness [mm] 7 + S
1.9 SDI 1.9 TDI	47 74	10/01→11/09 10/01→11/09	➡	11/01→ 05/09; +PR 1KD / 1KS / 1KT / 1KV		**24.0109-0123.1**	**409123**	Ø 230 Brake Disc Thickness [mm] 9 Minimum thickness [mm] 7 + S
Sensor, wheel speed								
1.2 1.4 FSI 1.6 1.6 Flex	40 63 74 74	01/02→05/07 02/02→07/06 08/02→05/05 06/08→04/09	⬅ ⬅	◪ ◪		**24.0711-5273.3** **24.0711-5274.3**	**360303** **360304**	
1.2 1.2 12V 1.4 16V 1.4 BiFuel 1.4 TDI 1.6 16V 1.8 GTI 1.9 TDI	44 51 59 60 51 - 59 77 110 96	05/07→11/09 05/07→11/09 05/06→11/09 05/06→11/09 04/05→11/09 05/06→11/09 09/05→11/09 11/03→11/09	⬅ ⬅	→ 05/09; ◪ → 05/09; ◪		**24.0711-5273.3** **24.0711-5274.3**	**360303** **360304**	
1.2 12V 1.4 16V 1.4 TDI	47 55 - 74 55	10/01→07/07 10/01→05/08 10/01→06/05	⬅ ⬅	11/01→; ◪ 11/01→; ◪		**24.0711-5273.3** **24.0711-5274.3**	**360303** **360304**	
1.4	61	08/02→11/09	⬅ ⬅	05/06→ 05/09; ◪ 05/06→ 05/09; ◪		**24.0711-5273.3** **24.0711-5274.3**	**360303** **360304**	
1.8 GTi Cup Edition	132	05/06→11/09	⬅ ⬅	06/06→ 05/09; ◪ 06/06→ 05/09; ◪		**24.0711-5273.3** **24.0711-5274.3**	**360303** **360304**	
1.9 SDI 1.9 TDI	47 74	10/01→11/09 10/01→11/09	⬅ ⬅	11/01→ 05/09; ◪ 11/01→ 05/09; ◪		**24.0711-5273.3** **24.0711-5274.3**	**360303** **360304**	
Slave Cylinder, clutch								
1.2 1.4 FSI 1.6	40 63 74	01/02→05/07 02/02→07/06 08/02→05/05		Transmission Type: NQ 200		**24.2519-1706.3**	**040096**	Ø 19

	kW				! #			
VW - POLO (9N_, 9A_) 10/01→10/14								
Slave Cylinder, clutch								
1.6 Flex	74	06/08→04/09		Transmission Type: NQ 200		**24.2519-1706.3**	**040096**	Ø 19
1.2 1.2 12V 1.4 16V 1.4 BiFuel 1.4 TDI 1.6 16V 1.8 GTI 1.9 TDI	44 51 59 60 51 - 59 77 110 96	05/07→11/09 05/07→11/09 05/06→11/09 05/06→11/09 04/05→11/09 05/06→11/09 09/05→11/09 11/03→11/09		→ 05/09; Transmission Type: NQ 200		**24.2519-1706.3**	**040096**	Ø 19
1.2 12V 1.4 16V 1.4 TDI	47 55 - 74 55	10/01→07/07 10/01→05/08 10/01→06/05		11/01→; Transmission Type: NQ 200		**24.2519-1706.3**	**040096**	Ø 19
1.4	61	08/02→11/09		05/06→ 05/09; Transmission Type: NQ 200		**24.2519-1706.3**	**040096**	Ø 19
1.8 GTi Cup Edition	132	05/06→11/09		06/06→ 05/09; Transmission Type: NQ 200		**24.2519-1706.3**	**040096**	Ø 19
1.9 SDI 1.9 TDI	47 74	10/01→11/09 10/01→11/09		11/01→ 05/09; Transmission Type: NQ 200		**24.2519-1706.3**	**040096**	Ø 19
VW - POLO IV Saloon (9A4, 9A2, 9N2, 9A6) 09/02→								
Brake Master Cylinder								
1.0 1.4 1.4 TDI 1.6 Flex 1.6 Total Flex	58 74 55 76 74	02/03→10/03 11/03→06/05 07/03→06/05 12/04→10/14 10/04→06/06		9N-5-500001→; + ABS		**24.2119-1712.3**	**010912**	Ø 19 without brake fluid reservoir
1.4 1.6 1.6 Flex 1.9 SDI 1.9 TDi 2.0 Flex	55 - 61 74 77 47 74 88	11/02→04/12 09/02→ 05/08→10/14 09/02→04/12 09/02→ 10/08→12/14		9N-5-500001→; → 05/09; + ABS		**24.2119-1712.3**	**010912**	Ø 19 without brake fluid reservoir
Guide Bolt, brake caliper								
1.0 1.4 1.4 TDI	58 74 55	02/03→10/03 11/03→06/05 07/03→06/05		+PR 1LJ	2	**11.8171-0008.1**	**990049**	ATE
1.4 1.6 Flex 1.9 SDI 1.9 TDi 2.0 Flex	55 - 61 77 47 74 88	11/02→04/12 05/08→10/14 09/02→04/12 09/02→ 10/08→12/14		→ 05/09; +PR 1LJ	2	**11.8171-0008.1**	**990049**	ATE
1.6	74	09/02→		05/06→ 05/09; +PR 1LJ	2	**11.8171-0008.1**	**990049**	ATE
1.6 Flex 1.6 Total Flex	76 74	12/04→10/14 10/04→06/06		05/06→; +PR 1LJ	2	**11.8171-0008.1**	**990049**	ATE
Brake Disc								
1.0 1.4 1.4 TDI	58 74 55	02/03→10/03 11/03→06/05 07/03→06/05	➡	+PR 1KD / 1KS / 1KT / 1KV		**24.0109-0123.1**	**409123**	Ø 230 Brake Disc Thickness [mm] 9 Minimum thickness [mm] 7 + S
1.4 1.6 Flex 1.9 SDI 1.9 TDi 2.0 Flex	55 - 61 77 47 74 88	11/02→04/12 05/08→10/14 09/02→04/12 09/02→ 10/08→12/14	➡	→ 05/09; +PR 1KD / 1KS / 1KT / 1KV		**24.0109-0123.1**	**409123**	Ø 230 Brake Disc Thickness [mm] 9 Minimum thickness [mm] 7 + S
1.6	74	09/02→	➡	05/06→ 05/09; +PR 1KD / 1KS / 1KT / 1KV		**24.0109-0123.1**	**409123**	Ø 230 Brake Disc Thickness [mm] 9 Minimum thickness [mm] 7 + S
1.6 Flex 1.6 Total Flex	76 74	12/04→10/14 10/04→06/06	➡	05/06→; +PR 1KD / 1KS / 1KT / 1KV		**24.0109-0123.1**	**409123**	Ø 230 Brake Disc Thickness [mm] 9 Minimum thickness [mm] 7 + S
Sensor, wheel speed								
1.0 1.4 1.4 TDI	58 74 55	02/03→10/03 11/03→06/05 07/03→06/05	⬅ ⬅	◪ ◪		**24.0711-5273.3** **24.0711-5274.3**	**360303** **360304**	
1.4 1.6 Flex 1.9 SDI 1.9 TDi 2.0 Flex	55 - 61 77 47 74 88	11/02→04/12 05/08→10/14 09/02→04/12 09/02→ 10/08→12/14	⬅ ⬅	→ 05/09; ◪ → 05/09; ◪		**24.0711-5273.3** **24.0711-5274.3**	**360303** **360304**	
1.6	74	09/02→	⬅	05/06→ 05/09; ◪		**24.0711-5273.3**	**360303**	

© 2022 Continental Aftermarket & Services GmbH

	kW				! #			
VW - POLO IV Saloon (9A4, 9A2, 9N2, 9A6) 09/02→								
Sensor, wheel speed								
1.6	74	09/02→	←	05/06→ 05/09;		**24.0711-5274.3**	**360304**	
1.6 Flex 1.6 Total Flex	76 74	12/04→10/14 10/04→06/06	← ←	05/06→; 05/06→;		**24.0711-5273.3** **24.0711-5274.3**	**360303** **360304**	
Slave Cylinder, clutch								
1.0 1.4 1.4 TDI	58 74 55	02/03→10/03 11/03→06/05 07/03→06/05		Transmission Type: NQ 200		**24.2519-1706.3**	**040096**	Ø 19
1.4 1.6 Flex 1.9 SDI 1.9 TDI 2.0 Flex	55 - 61 77 47 74 88	11/02→04/12 05/08→10/14 09/02→04/12 09/02→ 10/08→12/14		→ 05/09; Transmission Type: NQ 200		**24.2519-1706.3**	**040096**	Ø 19
1.6	74	09/02→		05/06→ 05/09; Transmission Type: NQ 200		**24.2519-1706.3**	**040096**	Ø 19
1.6 Flex 1.6 Total Flex	76 74	12/04→10/14 10/04→06/06		05/06→; Transmission Type: NQ 200		**24.2519-1706.3**	**040096**	Ø 19
VW - POLO IV Saloon (9N4) 09/02→12/10								
Brake Master Cylinder								
1.4 TDi	55	01/03→12/07		9N-5-500001→; + ABS		**24.2119-1712.3**	**010912**	Ø 19 without brake fluid reservoir
1.9 TDI	74	07/03→12/10		9N-5-500001→; → 05/09; + ABS		**24.2119-1712.3**	**010912**	Ø 19 without brake fluid reservoir
Guide Bolt, brake caliper								
1.4 TDi	55	01/03→12/07		+PR 1LJ	2	**11.8171-0008.1**	**990049**	ATE
1.9 TDI	74	07/03→12/10		→ 05/09; +PR 1LJ	2	**11.8171-0008.1**	**990049**	ATE
Brake Disc								
1.4 TDi	55	01/03→12/07	→	+PR 1KD / 1KS / 1KT / 1KV		**24.0109-0123.1**	**409123**	Ø 230 Brake Disc Thickness [mm] 9 Minimum thickness [mm] 7 + S
1.9 TDI	74	07/03→12/10	→	→ 05/09; +PR 1KD / 1KS / 1KT / 1KV		**24.0109-0123.1**	**409123**	Ø 230 Brake Disc Thickness [mm] 9 Minimum thickness [mm] 7 + S
Sensor, wheel speed								
1.4 TDi	55	01/03→12/07	← ←	 		**24.0711-5273.3** **24.0711-5274.3**	**360303** **360304**	
1.9 TDI	74	07/03→12/10	← ←	→ 05/09; → 05/09;		**24.0711-5273.3** **24.0711-5274.3**	**360303** **360304**	
Slave Cylinder, clutch								
1.4 TDi	55	01/03→12/07		Transmission Type: NQ 200		**24.2519-1706.3**	**040096**	Ø 19
1.9 TDI	74	07/03→12/10		→ 05/09; Transmission Type: NQ 200		**24.2519-1706.3**	**040096**	Ø 19
VW - POLO V (6R1, 6C1) 03/09→								
Guide Bolt, brake caliper								
1.0 1.0 TSI 1.4 TDI 1.4 TSI	44 - 55 70 - 81 55 - 77 110	01/14→ 11/14→ 02/14→ 05/14→10/17		+PR 1ZG / 1LR / 1ZJ +PR 1LN / 1ZC	2 2	**11.8171-0008.1** **11.8171-0008.1**	**990049** **990049**	ATE ATE
1.2 1.2 TDI 1.2 TSI 1.2 TSI 16V 1.4 1.4 BiFuel 1.4 GTI 1.4 TSI 1.6 1.6 BiFuel 1.6 TDI 2.0 R WRC	44 - 55 55 66 - 81 66 63 60 132 103 66 - 81 60 55 - 77 162	06/09→ 10/09→ 11/09→ 02/14→10/17 03/09→05/14 03/10→01/11 05/10→ 10/12→05/14 07/14→10/17 01/11→05/14 06/09→ 08/13→05/14		+PR 1ZD +PR 1ZP / 1ZR +PR 1ZG / 1LR / 1ZJ +PR 1LN / 1ZC	2 2 2 2	**11.8171-0008.1** **11.8171-0008.1** **11.8171-0008.1** **11.8171-0008.1**	**990049** **990049** **990049** **990049**	ATE ATE ATE ATE
1.6	77	01/10→		07/14→; +PR 1LN / 1ZC	2	**11.8171-0008.1**	**990049**	ATE

	kW				! #			
VW - POLO V (6R1, 6C1) 03/09→								
Guide Bolt, brake caliper								
1.6	77	01/10→		07/14→; +PR 1ZG / 1LR / 1ZJ	2	**11.8171-0008.1**	**990049**	ATE
				07/14→; +PR 1ZD	2	**11.8171-0008.1**	**990049**	ATE
				07/14→; +PR 1ZP / 1ZR	2	**11.8171-0008.1**	**990049**	ATE
1.8 GTI 1.8 GTI 230	141 169	11/14→ 04/16→		+PR 1ZP / 1ZR	2	**11.8171-0008.1**	**990049**	ATE
				+PR 1ZG / 1LR / 1ZJ	2	**11.8171-0008.1**	**990049**	ATE
				+PR 1LN / 1ZC	2	**11.8171-0008.1**	**990049**	ATE
Brake Disc								
1.0 1.0 TSI 1.2 TSI 1.4 TDI 1.4 TSI 1.8 GTI 1.8 GTI 230	44 - 55 70 - 81 81 55 - 77 110 141 169	01/14→ 11/14→ 01/14→ 02/14→ 05/14→10/17 11/14→ 04/16→	➡	+PR 1KK / 1KT / 2EJ		**24.0109-0123.1**	**409123**	Ø 230 Brake Disc Thickness [mm] 9 Minimum thickness [mm] 7 + S
1.2 1.2 TDI 1.2 TSI 1.2 TSI 16V 1.4 1.4 BiFuel 1.4 GTI 1.4 TSI 1.6 1.6 BiFuel 1.6 TDI 2.0 R WRC	44 - 55 55 66 - 77 66 63 60 132 103 66 - 81 60 55 - 77 162	06/09→ 10/09→ 11/09→ 02/14→10/17 03/09→05/14 03/10→01/11 05/10→ 10/12→05/14 07/14→10/17 01/11→05/14 06/09→ 08/13→05/14	➡	+PR 1KK / 1KT / 1KV / 2EJ		**24.0109-0123.1**	**409123**	Ø 230 Brake Disc Thickness [mm] 9 Minimum thickness [mm] 7 + S
1.6	77	01/10→	➡	07/14→; +PR 1KK / 1KT / 1KV / 2EJ		**24.0109-0123.1**	**409123**	Ø 230 Brake Disc Thickness [mm] 9 Minimum thickness [mm] 7 + S
Sensor, wheel speed								
1.0 1.0 TSI 1.2 1.2 TDI 1.2 TSI 1.2 TSI 16V 1.4 1.4 BiFuel 1.4 GTI 1.4 TDI 1.4 TSI 1.6 1.6 BiFuel 1.6 TDI 1.8 GTI 1.8 GTI 230 2.0 R WRC	44 - 55 70 - 81 44 - 55 55 66 - 81 66 63 60 132 55 - 77 103 - 110 66 - 81 60 55 - 77 141 169 162	01/14→ 11/14→ 06/09→ 10/09→ 11/09→ 02/14→10/17 03/09→05/14 03/10→01/11 05/10→ 02/14→ 10/12→10/17 07/14→10/17 01/11→05/14 06/09→ 11/14→ 04/16→ 08/13→05/14	⬅	◪		**24.0711-5273.3**	**360303**	
			⬅	◪		**24.0711-5274.3**	**360304**	
1.6	77	01/10→	⬅	07/14→; ◪		**24.0711-5273.3**	**360303**	
			⬅	07/14→; ◪		**24.0711-5274.3**	**360304**	
Slave Cylinder, clutch								
1.0 1.0 TSI 1.2 1.2 TDI 1.2 TSI 1.2 TSI 16V 1.4	44 - 55 70 - 81 44 - 55 55 66 - 81 66 63	01/14→ 11/14→ 06/09→ 10/09→ 11/09→ 02/14→10/17 03/09→05/14		+PR 0EM		**24.2519-1706.3**	**040096**	Ø 19

© 2022 Continental Aftermarket & Services GmbH

	kW				! #			
VW - POLO V (6R1, 6C1) 03/09→								
Slave Cylinder, clutch								
1.4 BiFuel 1.4 GTI 1.4 TDI 1.4 TSI 1.6 1.6 BiFuel 1.6 TDI 1.8 GTI 1.8 GTI 230 2.0 R WRC	60 132 55 - 77 103 - 110 66 - 81 60 55 - 77 141 169 162	03/10→01/11 05/10→ 02/14→ 10/12→10/17 07/14→10/17 01/11→05/14 06/09→ 11/14→ 04/16→ 08/13→05/14		+PR 0EM		**24.2519-1706.3**	**040096**	Ø 19
1.6	77	01/10→		07/14→; +PR 0EM		**24.2519-1706.3**	**040096**	Ø 19
VW - POLO V Saloon (602, 604, 612, 614) 05/09→								
Guide Bolt, brake caliper								
1.2 TSI 1.4 TSi 1.6	77 92 66 - 81	10/13→ 05/16→ 07/14→		+PR 1ZD	2	**11.8171-0008.1**	**990049**	ATE
				+PR 1ZP / 1ZR	2	**11.8171-0008.1**	**990049**	ATE
				+PR 1ZG / 1LR / 1ZJ	2	**11.8171-0008.1**	**990049**	ATE
				+PR 1LN / 1ZC	2	**11.8171-0008.1**	**990049**	ATE
1.4 1.6	63 63 - 77	12/10→ 05/10→		07/14→; +PR 1ZP / 1ZR	2	**11.8171-0008.1**	**990049**	ATE
				07/14→; +PR 1LN / 1ZC	2	**11.8171-0008.1**	**990049**	ATE
				07/14→; +PR 1ZG / 1LR / 1ZJ	2	**11.8171-0008.1**	**990049**	ATE
				07/14→; +PR 1ZD	2	**11.8171-0008.1**	**990049**	ATE
Brake Disc								
1.2 TSI 1.4 TSi 1.6	77 92 66 - 81	10/13→ 05/16→ 07/14→	➡	+PR 1KK / 1KT / 1KV / 2EJ		**24.0109-0123.1**	**409123**	Ø 230 Brake Disc Thickness [mm] 9 Minimum thickness [mm] 7 + S
1.4 1.6	63 63 - 77	12/10→ 05/10→	➡	07/14→; +PR 1KK / 1KT / 1KV / 2EJ		**24.0109-0123.1**	**409123**	Ø 230 Brake Disc Thickness [mm] 9 Minimum thickness [mm] 7 + S
Sensor, wheel speed								
1.2 TSI 1.4 TSi 1.6	77 92 66 - 81	10/13→ 05/16→ 07/14→	⬅	◪		**24.0711-5273.3**	**360303**	
			⬅	◪		**24.0711-5274.3**	**360304**	
1.4 1.6	63 63 - 77	12/10→ 05/10→	⬅	07/14→; ◪		**24.0711-5273.3**	**360303**	
			⬅	07/14→; ◪		**24.0711-5274.3**	**360304**	
Slave Cylinder, clutch								
1.2 TSI 1.4 TSi 1.6	77 92 66 - 81	10/13→ 05/16→ 07/14→		+PR 0EM		**24.2519-1706.3**	**040096**	Ø 19
1.4 1.6	63 63 - 77	12/10→ 05/10→		07/14→; +PR 0EM		**24.2519-1706.3**	**040096**	Ø 19
VW - POLO VI (AW1, BZ1, AE1) 06/17→								
Brake Pad Set, disc brake								
1.0 1.0 MPi 1.0 TGI 1.0 TSI 1.5 TSI 1.6 MSi 1.6 TDI 2.0 GTI GTI	48 - 55 59 66 70 - 85 110 81 59 - 70 147 152	06/17→ 09/18→ 09/17→ 06/17→ 10/18→ 09/17→ 11/17→ 11/17→ 04/21→	⬅	+PR 1ZB / 1ZU		**13.0460-2785.2** **13.0470-2609.2** **13.0470-2785.2**	**602785** **LD2609** **LD2785**	TRW 25683 20,4 + WE / + WK TRW + WE / - WK Ceramic TRW 25683 20,4 + WE / + WK Ceramic
Brake Disc								
1.0 1.0 TSI	48 - 55 70	06/17→ 06/17→	⬅	09/17→; +PR 1ZG / 1ZJ		**24.0122-0312.1**	**422312**	Ø 256 Brake Disc Thickness [mm] 22 Minimum thickness [mm] 19 Vented + S

	kW				! #			
VW - POLO VI (AW1, BZ1, AE1) 06/17→								
Brake Disc								
1.0 1.0 TSI	48 - 55 70	06/17→ 06/17→	←	09/17→; +PR 1ZE / 1ZP		**24.0124-0263.1**	**424263**	Ø 275.7 Brake Disc Thickness [mm] 24 Minimum thickness [mm] 21 Vented + S
			→	+PR 1KV		**24.0109-0123.1**	**409123**	Ø 230 Brake Disc Thickness [mm] 9 Minimum thickness [mm] 7 + S
1.0 MPi 1.0 TGI 1.0 TSI 1.5 TSI 1.6 MSi 1.6 TDI 2.0 GTI GTI	59 66 81 - 85 110 81 59 - 70 147 152	09/18→ 09/17→ 09/17→ 10/18→ 09/17→ 11/17→ 11/17→ 04/21→	←	+PR 1ZG / 1ZJ		**24.0122-0312.1**	**422312**	Ø 256 Brake Disc Thickness [mm] 22 Minimum thickness [mm] 19 Vented + S
			←	+PR 1ZE / 1ZP		**24.0124-0263.1**	**424263**	Ø 275.7 Brake Disc Thickness [mm] 24 Minimum thickness [mm] 21 Vented + S
			→	+PR 1KV		**24.0109-0123.1**	**409123**	Ø 230 Brake Disc Thickness [mm] 9 Minimum thickness [mm] 7 + S
Sensor, wheel speed								
1.0 1.0 MPi 1.0 TGI 1.0 TSI 1.5 TSI 1.6 MSi 1.6 TDI 2.0 GTI GTI	48 - 55 59 66 70 - 85 110 81 59 - 70 147 152	06/17→ 09/18→ 09/17→ 06/17→ 10/18→ 09/17→ 11/17→ 11/17→ 04/21→	←			**24.0711-5273.3**	**360303**	
			←			**24.0711-5274.3**	**360304**	
Wheel Brake Cylinder								
1.0 1.0 TSI	48 - 55 70	06/17→ 06/17→	→	09/17→; +PR 1KA / 1KG	2	**24.3220-1757.3**	**020605**	ALU
1.0 MPi 1.0 TGI 1.0 TSI 1.5 TSI 1.6 MSi 1.6 TDI 2.0 GTI	59 66 81 - 85 110 81 59 - 70 147	09/18→ 09/17→ 09/17→ 10/18→ 09/17→ 11/17→ 11/17→	→	+PR 1KA / 1KG	2	**24.3220-1757.3**	**020605**	ALU
Accessory Kit, brake shoes								
1.0 1.0 MPi 1.0 TGI 1.0 TSI 1.5 TSI 1.6 MSi 1.6 TDI 2.0 GTI	48 - 55 59 66 70 - 85 110 81 59 - 70 147	06/17→ 09/18→ 09/17→ 06/17→ 10/18→ 09/17→ 11/17→ 11/17→	→	+PR 1KA		**03.0137-9309.2**	**669309**	AP
			→	+PR 1KG		**03.0137-9317.2**	**669317**	
Brake Shoe Set								
1.0 1.0 TSI	48 - 55 70	06/17→ 06/17→	→	+PR 1KG		**03.0137-0539.2**	**650539**	Ø 203 Width [mm] 38 + HEB
			→	09/17→; +PR 1KA		**03.0137-0540.2**	**650540**	Ø 228 Width [mm] 42 + HEB
1.0 MPi 1.0 TGI 1.0 TSI 1.5 TSI 1.6 MSi 1.6 TDI 2.0 GTI	59 66 81 - 85 110 81 59 - 70 147	09/18→ 09/17→ 09/17→ 10/18→ 09/17→ 11/17→ 11/17→	→	+PR 1KG		**03.0137-0539.2**	**650539**	Ø 203 Width [mm] 38 + HEB
			→	+PR 1KA		**03.0137-0540.2**	**650540**	Ø 228 Width [mm] 42 + HEB
VW - POLO Van (6R) 03/09→								
Guide Bolt, brake caliper								
1.0 1.0 TSI	44 - 55 70	01/14→ 11/14→		+PR 1ZG / 1LR / 1ZJ	2	**11.8171-0008.1**	**990049**	ATE
				+PR 1LN / 1ZC	2	**11.8171-0008.1**	**990049**	ATE

© 2022 Continental Aftermarket & Services GmbH

	kW				! #			
VW - POLO Van (6R) 03/09→								
Guide Bolt, brake caliper								
1.4 TDI	55 - 66	02/14→		+PR 1ZG / 1LR / 1ZJ	2	**11.8171-0008.1**	**990049**	ATE
1.4 TSI	110	05/14→		+PR 1LN / 1ZC	2	**11.8171-0008.1**	**990049**	ATE
1.2	44	03/09→05/14		+PR 1ZG / 1LR / 1ZJ	2	**11.8171-0008.1**	**990049**	ATE
1.2 BlueMotion	51	03/09→05/14		+PR 1LN / 1ZC	2	**11.8171-0008.1**	**990049**	ATE
1.2 TDi BlueMotion	55	10/09→05/14		+PR 1ZD	2	**11.8171-0008.1**	**990049**	ATE
1.2 TSi	66	05/11→05/14		+PR 1ZP / 1ZR	2	**11.8171-0008.1**	**990049**	ATE
1.2 TSI	66 - 81	01/14→						
1.2 TSi BlueMotion	77	11/09→05/14						
1.4	63	03/09→05/14						
1.4 GTi	132	05/10→05/14						
1.6 TDi	55 - 77	06/09→05/14						
1.6 TDi BlueMotion	66	06/09→05/14						
Brake Disc								
1.0	44 - 55	01/14→	➡	+PR 1KK / 1KT / 2EJ		**24.0109-0123.1**	**409123**	Ø 230 Brake Disc Thickness [mm] 9 Minimum thickness [mm] 7 + S
1.0 TSI	70	11/14→						
1.2 TSI	81	01/14→						
1.4 TDI	55 - 66	02/14→						
1.4 TSI	110	05/14→						
1.2	44	03/09→05/14	➡	+PR 1KK / 1KT / 1KV / 2EJ		**24.0109-0123.1**	**409123**	Ø 230 Brake Disc Thickness [mm] 9 Minimum thickness [mm] 7 + S
1.2 BlueMotion	51	03/09→05/14						
1.2 TDi BlueMotion	55	10/09→05/14						
1.2 TSi	66	05/11→05/14						
1.2 TSI	66	02/14→						
1.2 TSi BlueMotion	77	11/09→05/14						
1.4	63	03/09→05/14						
1.4 GTi	132	05/10→05/14						
1.6 TDi	55 - 77	06/09→05/14						
1.6 TDi BlueMotion	66	06/09→05/14						
Sensor, wheel speed								
1.0	44 - 55	01/14→	⬅			**24.0711-5273.3**	**360303**	
1.0 TSI	70	11/14→	⬅			**24.0711-5274.3**	**360304**	
1.2	44	03/09→05/14						
1.2 BlueMotion	51	03/09→05/14						
1.2 TDi BlueMotion	55	10/09→05/14						
1.2 TSi	66	05/11→05/14						
1.2 TSI	66 - 81	01/14→						
1.2 TSi BlueMotion	77	11/09→05/14						
1.4	63	03/09→05/14						
1.4 GTi	132	05/10→05/14						
1.4 TDI	55 - 66	02/14→						
1.4 TSI	110	05/14→						
1.6 TDi	55 - 77	06/09→05/14						
1.6 TDi BlueMotion	66	06/09→05/14						
Slave Cylinder, clutch								
1.0	44 - 55	01/14→		+PR 0EM		**24.2519-1706.3**	**040096**	Ø 19
1.0 TSI	70	11/14→						
1.2	44	03/09→05/14						
1.2 BlueMotion	51	03/09→05/14						
1.2 TDi BlueMotion	55	10/09→05/14						
1.2 TSi	66	05/11→05/14						
1.2 TSI	66 - 81	01/14→						
1.2 TSi BlueMotion	77	11/09→05/14						
1.4	63	03/09→05/14						
1.4 GTi	132	05/10→05/14						
1.4 TDI	55 - 66	02/14→						
1.4 TSI	110	05/14→						
1.6 TDi	55 - 77	06/09→05/14						
1.6 TDi BlueMotion	66	06/09→05/14						
VW - POLO Van Estate Van (6V5) 05/96→09/01								
Brake Master Cylinder								
1.9 SDI	47 - 50	05/96→09/01		9N-5-500001→; + ABS		**24.2119-1712.3**	**010912**	Ø 19 without brake fluid reservoir

	kW				! #			
VW - POLO Van Estate Van (6V5) 05/96→09/01								
Guide Bolt, brake caliper								
1.9 SDI	47 - 50	05/96→09/01		+PR 1LJ	2	**11.8171-0008.1**	**990049**	ATE
Brake Disc								
1.9 SDI	47 - 50	05/96→09/01	➡	+PR 1KD / 1KS / 1KT / 1KV		**24.0109-0123.1**	**409123**	Ø 230 Brake Disc Thickness [mm] 9 Minimum thickness [mm] 7 + S
Sensor, wheel speed								
1.9 SDI	47 - 50	05/96→09/01	⬅	◪		**24.0711-5273.3**	**360303**	
			⬅	◪		**24.0711-5274.3**	**360304**	
Slave Cylinder, clutch								
1.9 SDI	47 - 50	05/96→09/01		Transmission Type: NQ 200		**24.2519-1706.3**	**040096**	Ø 19
VW - POLO VIVO Hatchback (6S1, 6S3) 02/10→09/17								
Guide Bolt, brake caliper								
1.4	55	02/10→09/17		07/14→; +PR 1LN / 1ZC	2	**11.8171-0008.1**	**990049**	ATE
				07/14→; +PR 1ZG / 1LR / 1ZJ	2	**11.8171-0008.1**	**990049**	ATE
				07/14→; +PR 1ZD	2	**11.8171-0008.1**	**990049**	ATE
				07/14→; +PR 1ZP / 1ZR	2	**11.8171-0008.1**	**990049**	ATE
Brake Disc								
1.4	55	02/10→09/17	➡	07/14→; +PR 1KK / 1KT / 1KV / 2EJ		**24.0109-0123.1**	**409123**	Ø 230 Brake Disc Thickness [mm] 9 Minimum thickness [mm] 7 + S
Sensor, wheel speed								
1.4	55	02/10→09/17	⬅	07/14→; ◪		**24.0711-5273.3**	**360303**	
			⬅	07/14→; ◪		**24.0711-5274.3**	**360304**	
Slave Cylinder, clutch								
1.4	55	02/10→09/17		07/14→; +PR 0EM		**24.2519-1706.3**	**040096**	Ø 19
VW - SCIROCCO III (137, 138) 05/08→11/17								
Guide Bolt, brake caliper								
1.4 TSI	90	08/08→11/17		09/08→; +PR 1ZE / 1ZP	2	**11.8171-0008.1**	**990049**	ATE
				09/08→; +PR 1LJ / 1ZA / 1ZD	2	**11.8171-0008.1**	**990049**	ATE
				09/08→; +PR 1ZB	2	**11.8171-0008.1**	**990049**	ATE
1.4 TSI	92 - 110	11/13→11/17		+PR 1ZE / 1ZP	2	**11.8171-0008.1**	**990049**	ATE
2.0 R	188 - 195	11/09→11/17		+PR 1LJ / 1ZA / 1ZD	2	**11.8171-0008.1**	**990049**	ATE
2.0 TDI	100 - 135	05/09→11/17		+PR 1ZB	2	**11.8171-0008.1**	**990049**	ATE
2.0 TSI	132 - 162	11/09→11/17						
1.4 TSI 2.0 TFSI	118 147	05/08→11/17 05/08→11/09		08/08→; +PR 1ZE / 1ZP	2	**11.8171-0008.1**	**990049**	ATE
				08/08→; +PR 1LJ / 1ZA / 1ZD	2	**11.8171-0008.1**	**990049**	ATE
				08/08→; +PR 1ZB	2	**11.8171-0008.1**	**990049**	ATE
2.0 R	206	05/14→11/17		08/14→; +PR 1ZB	2	**11.8171-0008.1**	**990049**	ATE
				08/14→; +PR 1LJ / 1ZA / 1ZD	2	**11.8171-0008.1**	**990049**	ATE
				08/14→; +PR 1ZE / 1ZP	2	**11.8171-0008.1**	**990049**	ATE
2.0 TDI	103	08/08→11/17		10/08→; +PR 1ZE / 1ZP	2	**11.8171-0008.1**	**990049**	ATE
				10/08→; +PR 1LJ / 1ZA / 1ZD	2	**11.8171-0008.1**	**990049**	ATE
				10/08→; +PR 1ZB	2	**11.8171-0008.1**	**990049**	ATE
Brake Disc								
1.4 TSI	90	08/08→11/17	⬅	09/08→; +PR 1ZE / 1ZP		**24.0125-0145.1**	**425145**	Ø 288 Brake Disc Thickness [mm] 25 Minimum thickness [mm] 22 Vented + S
			⬅	09/08→; +PR 1LJ / 1ZA / 1ZB / 1ZD		**24.0125-0158.1**	**425158**	Ø 312 Brake Disc Thickness [mm] 25 Minimum thickness [mm] 22 Vented + S

© 2022 Continental Aftermarket & Services GmbH

VW - SCIROCCO III (137, 138) 05/08→11/17

Brake Disc

	kW				! #			
1.4 TSI	90	08/08→11/17	←	09/08→; +PR 1LJ / 1ZA / 1ZB / 1ZD		**24.0325-0158.1**	**525158**	Ø 312 Brake Disc Thickness [mm] 25 Minimum thickness [mm] 22 Vented + S
			→	09/08→; +PR 1KS / 1KT		**24.0110-0356.1**	**410356**	Ø 272 Brake Disc Thickness [mm] 9.7 Minimum thickness [mm] 8 + S
			→	09/08→; +PR 1KW		**24.0122-0219.1**	**422219**	Ø 310 Brake Disc Thickness [mm] 22 Minimum thickness [mm] 20 Vented
1.4 TSI 2.0 R 2.0 TDI 2.0 TSI	92 - 110 188 - 195 100 - 135 132 - 162	11/13→11/17 11/09→11/17 05/09→11/17 11/09→11/17	←	+PR 1ZE / 1ZP		**24.0125-0145.1**	**425145**	Ø 288 Brake Disc Thickness [mm] 25 Minimum thickness [mm] 22 Vented + S
			←	+PR 1LJ / 1ZA / 1ZB / 1ZD		**24.0125-0158.1** **24.0325-0158.1**	**425158** **525158**	Ø 312 Brake Disc Thickness [mm] 25 Minimum thickness [mm] 22 Vented + S Ø 312 Brake Disc Thickness [mm] 25 Minimum thickness [mm] 22 Vented + S
			→	+PR 1KS / 1KT		**24.0110-0356.1**	**410356**	Ø 272 Brake Disc Thickness [mm] 9.7 Minimum thickness [mm] 8 + S
			→	+PR 1KW		**24.0122-0219.1**	**422219**	Ø 310 Brake Disc Thickness [mm] 22 Minimum thickness [mm] 20 Vented
1.4 TSI 2.0 TFSI	118 147	05/08→11/17 05/08→11/09	←	08/08→; +PR 1ZE / 1ZP		**24.0125-0145.1**	**425145**	Ø 288 Brake Disc Thickness [mm] 25 Minimum thickness [mm] 22 Vented + S
			←	08/08→; +PR 1LJ / 1ZA / 1ZB / 1ZD		**24.0125-0158.1** **24.0325-0158.1**	**425158** **525158**	Ø 312 Brake Disc Thickness [mm] 25 Minimum thickness [mm] 22 Vented + S Ø 312 Brake Disc Thickness [mm] 25 Minimum thickness [mm] 22 Vented + S
			→	08/08→; +PR 1KS / 1KT		**24.0110-0356.1**	**410356**	Ø 272 Brake Disc Thickness [mm] 9.7 Minimum thickness [mm] 8 + S
			→	08/08→; +PR 1KW		**24.0122-0219.1**	**422219**	Ø 310 Brake Disc Thickness [mm] 22 Minimum thickness [mm] 20 Vented
2.0 R	206	05/14→11/17	←	08/14→; +PR 1ZE / 1ZP		**24.0125-0145.1**	**425145**	Ø 288 Brake Disc Thickness [mm] 25 Minimum thickness [mm] 22 Vented + S
			←	08/14→; +PR 1LJ / 1ZA / 1ZB / 1ZD		**24.0125-0158.1** **24.0325-0158.1**	**425158** **525158**	Ø 312 Brake Disc Thickness [mm] 25 Minimum thickness [mm] 22 Vented + S Ø 312 Brake Disc Thickness [mm] 25 Minimum thickness [mm] 22 Vented + S
			→	08/14→; +PR 1KS / 1KT		**24.0110-0356.1**	**410356**	Ø 272 Brake Disc Thickness [mm] 9.7 Minimum thickness [mm] 8 + S
			→	08/14→; +PR 1KW		**24.0122-0219.1**	**422219**	Ø 310 Brake Disc Thickness [mm] 22 Minimum thickness [mm] 20 Vented
2.0 TDI	103	08/08→11/17	←	10/08→; +PR 1ZE / 1ZP		**24.0125-0145.1**	**425145**	Ø 288 Brake Disc Thickness [mm] 25 Minimum thickness [mm] 22 Vented + S
			←	10/08→; +PR 1LJ / 1ZA / 1ZB / 1ZD		**24.0125-0158.1**	**425158**	Ø 312 Brake Disc Thickness [mm] 25 Minimum thickness [mm] 22 Vented + S

	kW				! #			
VW - SCIROCCO III (137, 138) 05/08→11/17								
Brake Disc								
2.0 TDI	103	08/08→11/17	←	10/08→; +PR 1LJ / 1ZA / 1ZB / 1ZD		**24.0325-0158.1**	**525158**	Ø 312 Brake Disc Thickness [mm] 25 Minimum thickness [mm] 22 Vented + S
			→	10/08→; +PR 1KS / 1KT		**24.0110-0356.1**	**410356**	Ø 272 Brake Disc Thickness [mm] 9.7 Minimum thickness [mm] 8 + S
			→	10/08→; +PR 1KW		**24.0122-0219.1**	**422219**	Ø 310 Brake Disc Thickness [mm] 22 Minimum thickness [mm] 20 Vented
Slave Cylinder, clutch								
1.4 TSI	90	08/08→11/17		09/08→; +PR 0EM		**24.2519-1706.3**	**040096**	Ø 19
1.4 TSI 2.0 R 2.0 TDI 2.0 TSI	92 - 110 188 - 195 100 - 135 132 - 162	11/13→11/17 11/09→11/17 05/09→11/17 11/09→11/17		+PR 0EM		**24.2519-1706.3**	**040096**	Ø 19
1.4 TSI 2.0 TFSI	118 147	05/08→11/17 05/08→11/09		08/08→; +PR 0EM		**24.2519-1706.3**	**040096**	Ø 19
2.0 R	206	05/14→11/17		08/14→; +PR 0EM		**24.2519-1706.3**	**040096**	Ø 19
2.0 TDI	103	08/08→11/17		10/08→; +PR 0EM		**24.2519-1706.3**	**040096**	Ø 19
VW - SCIROCCO Van (137) 06/08→05/14								
Guide Bolt, brake caliper								
1.4 TSi	90	08/08→05/14		09/08→; +PR 1ZE / 1ZP	2	**11.8171-0008.1**	**990049**	ATE
				09/08→; +PR 1LJ / 1ZA / 1ZD	2	**11.8171-0008.1**	**990049**	ATE
				09/08→; +PR 1ZB	2	**11.8171-0008.1**	**990049**	ATE
1.4 TSi	118	06/08→05/14		08/08→; +PR 1ZE / 1ZP	2	**11.8171-0008.1**	**990049**	ATE
				08/08→; +PR 1LJ / 1ZA / 1ZD	2	**11.8171-0008.1**	**990049**	ATE
				08/08→; +PR 1ZB	2	**11.8171-0008.1**	**990049**	ATE
2.0 TDi	103	08/08→05/14		10/08→; +PR 1LJ / 1ZA / 1ZD	2	**11.8171-0008.1**	**990049**	ATE
				10/08→; +PR 1ZE / 1ZP	2	**11.8171-0008.1**	**990049**	ATE
				10/08→; +PR 1ZB	2	**11.8171-0008.1**	**990049**	ATE
2.0 TDi 2.0 TFSi	125 155	05/09→05/14 11/09→05/14		+PR 1ZE / 1ZP	2	**11.8171-0008.1**	**990049**	ATE
				+PR 1LJ / 1ZA / 1ZD	2	**11.8171-0008.1**	**990049**	ATE
				+PR 1ZB	2	**11.8171-0008.1**	**990049**	ATE
Brake Disc								
1.4 TSi	90	08/08→05/14	←	09/08→; +PR 1ZE / 1ZP		**24.0125-0145.1**	**425145**	Ø 288 Brake Disc Thickness [mm] 25 Minimum thickness [mm] 22 Vented + S
			←	09/08→; +PR 1LJ / 1ZA / 1ZB / 1ZD		**24.0125-0158.1**	**425158**	Ø 312 Brake Disc Thickness [mm] 25 Minimum thickness [mm] 22 Vented + S
			→	09/08→; +PR 1KS / 1KT		**24.0110-0356.1**	**410356**	Ø 272 Brake Disc Thickness [mm] 9.7 Minimum thickness [mm] 8 + S
			→	09/08→; +PR 1KW		**24.0122-0219.1**	**422219**	Ø 310 Brake Disc Thickness [mm] 22 Minimum thickness [mm] 20 Vented
1.4 TSi	118	06/08→05/14	←	08/08→; +PR 1ZE / 1ZP		**24.0125-0145.1**	**425145**	Ø 288 Brake Disc Thickness [mm] 25 Minimum thickness [mm] 22 Vented + S
			←	08/08→; +PR 1LJ / 1ZA / 1ZB / 1ZD		**24.0125-0158.1**	**425158**	Ø 312 Brake Disc Thickness [mm] 25 Minimum thickness [mm] 22 Vented + S
			→	08/08→; +PR 1KS / 1KT		**24.0110-0356.1**	**410356**	Ø 272 Brake Disc Thickness [mm] 9.7 Minimum thickness [mm] 8 + S

© 2022 Continental Aftermarket & Services GmbH

	kW				! #			
VW - SCIROCCO Van (137) 06/08→05/14								
Brake Disc								
1.4 TSi	118	06/08→05/14	➡	08/08→; +PR 1KW		**24.0122-0219.1**	**422219**	Ø 310 Brake Disc Thickness [mm] 22 Minimum thickness [mm] 20 Vented
2.0 TDi	103	08/08→05/14	⬅	10/08→; +PR 1ZE / 1ZP		**24.0125-0145.1**	**425145**	Ø 288 Brake Disc Thickness [mm] 25 Minimum thickness [mm] 22 Vented + S
			⬅	10/08→; +PR 1LJ / 1ZA / 1ZB / 1ZD		**24.0125-0158.1**	**425158**	Ø 312 Brake Disc Thickness [mm] 25 Minimum thickness [mm] 22 Vented + S
			➡	10/08→; +PR 1KS / 1KT		**24.0110-0356.1**	**410356**	Ø 272 Brake Disc Thickness [mm] 9.7 Minimum thickness [mm] 8 + S
			➡	10/08→; +PR 1KW		**24.0122-0219.1**	**422219**	Ø 310 Brake Disc Thickness [mm] 22 Minimum thickness [mm] 20 Vented
2.0 TDi 2.0 TFSi	125 155	05/09→05/14 11/09→05/14	⬅	+PR 1ZE / 1ZP		**24.0125-0145.1**	**425145**	Ø 288 Brake Disc Thickness [mm] 25 Minimum thickness [mm] 22 Vented + S
			⬅	+PR 1LJ / 1ZA / 1ZB / 1ZD		**24.0125-0158.1**	**425158**	Ø 312 Brake Disc Thickness [mm] 25 Minimum thickness [mm] 22 Vented + S
			➡	+PR 1KS / 1KT		**24.0110-0356.1**	**410356**	Ø 272 Brake Disc Thickness [mm] 9.7 Minimum thickness [mm] 8 + S
			➡	+PR 1KW		**24.0122-0219.1**	**422219**	Ø 310 Brake Disc Thickness [mm] 22 Minimum thickness [mm] 20 Vented
Slave Cylinder, clutch								
1.4 TSi	90	08/08→05/14		09/08→; +PR 0EM		**24.2519-1706.3**	**040096**	Ø 19
1.4 TSi	118	06/08→05/14		08/08→; +PR 0EM		**24.2519-1706.3**	**040096**	Ø 19
2.0 TDi	103	08/08→05/14		10/08→; +PR 0EM		**24.2519-1706.3**	**040096**	Ø 19
2.0 TDi 2.0 TFSi	125 155	05/09→05/14 11/09→05/14		+PR 0EM		**24.2519-1706.3**	**040096**	Ø 19
VW - SHARAN (7M8, 7M9, 7M6) 05/95→03/10								
Guide Bolt, brake caliper								
1.8 T 20V 1.9 TDI 2.0 2.0 16V 2.0 LPG 2.8 VR6 2.8 VR6 Syncro	110 66 - 81 85 110 85 128 128	09/97→03/10 09/95→03/10 09/95→03/10 09/95→02/00 04/06→03/10 09/95→04/00 11/96→04/00	⬅	→ 7M-1-070000	2	**11.8171-0008.1**	**990049**	ATE
1.9 TDI	85	04/00→03/10	⬅	05/00→; → 7M-1-070000	2	**11.8171-0008.1**	**990049**	ATE
VW - SHARAN (7N1, 7N2) 05/10→								
Guide Bolt, brake caliper								
1.4 TSI 2.0 TDI	110 100 - 103	05/10→ 05/10→		07/10→; +PR 1LJ	2	**11.8171-0008.1**	**990049**	ATE
2.0 TDI 2.0 TDI 4motion 2.0 TFSI	85 - 130 103 147	08/10→ 05/11→11/15 12/10→11/15		+PR 1LJ	2	**11.8171-0008.1**	**990049**	ATE
Brake Disc								
1.4 TSI 2.0 TDI	110 100 - 103	05/10→ 05/10→	⬅	07/10→; +PR 1LJ		**24.0125-0158.1** **24.0325-0158.1**	**425158** **525158**	Ø 312 Brake Disc Thickness [mm] 25 Minimum thickness [mm] 22 Vented + S Ø 312 Brake Disc Thickness [mm] 25 Minimum thickness [mm] 22 Vented + S

	kW				! #			
VW - SHARAN (7N1, 7N2) 05/10→								
Brake Disc								
1.4 TSI 2.0 TDI	110 100 - 103	05/10→ 05/10→	←	07/10→; +PR 1LW / 1LX		**24.0130-0220.1**	**430220**	Ø 314 Brake Disc Thickness [mm] 30 Minimum thickness [mm] 27 Vented + S
1.4 TSI 2.0 TDI 2.0 TDI 4motion	110 110 - 135 110 - 135	05/15→ 05/15→ 05/15→	←			**24.0130-0220.1**	**430220**	Ø 314 Brake Disc Thickness [mm] 30 Minimum thickness [mm] 27 Vented + S
2.0 TSI	162	05/15→	→	+ eFSB		**24.0112-0210.1**	**412210**	Ø 300 Brake Disc Thickness [mm] 12 Minimum thickness [mm] 10 + S
2.0 TDI 2.0 TDI 4motion 2.0 TFSI	85 - 130 103 147	08/10→ 05/11→11/15 12/10→11/15	←	+PR 1LJ		**24.0125-0158.1** **24.0325-0158.1**	**425158** **525158**	Ø 312 Brake Disc Thickness [mm] 25 Minimum thickness [mm] 22 Vented + S Ø 312 Brake Disc Thickness [mm] 25 Minimum thickness [mm] 22 Vented + S
			←	+PR 1LW / 1LX		**24.0130-0220.1**	**430220**	Ø 314 Brake Disc Thickness [mm] 30 Minimum thickness [mm] 27 Vented + S
VW - SHARAN VAN (7M_) 05/95→03/10								
Guide Bolt, brake caliper								
2.8 VR6	150	08/01→05/03	←	→ 7M-1-070000	2	**11.8171-0008.1**	**990049**	ATE
VW - SHARAN VAN (7N1, 7N2) 05/10→								
Guide Bolt, brake caliper								
1.4 TSI 2.0 TDI	110 100 - 103	05/10→11/15 05/10→11/15		07/10→; +PR 1LJ	2	**11.8171-0008.1**	**990049**	ATE
2.0 TDI 2.0 TSI	85 - 125 147	08/10→11/15 12/10→11/15		+PR 1LJ	2	**11.8171-0008.1**	**990049**	ATE
Brake Disc								
1.4 TSI 2.0 TDI	110 100 - 103	05/10→11/15 05/10→11/15	←	07/10→; +PR 1LJ		**24.0125-0158.1** **24.0325-0158.1**	**425158** **525158**	Ø 312 Brake Disc Thickness [mm] 25 Minimum thickness [mm] 22 Vented + S Ø 312 Brake Disc Thickness [mm] 25 Minimum thickness [mm] 22 Vented + S
			←	07/10→; +PR 1LW / 1LX		**24.0130-0220.1**	**430220**	Ø 314 Brake Disc Thickness [mm] 30 Minimum thickness [mm] 27 Vented + S
2.0 TDI 2.0 TSI	85 - 125 147	08/10→11/15 12/10→11/15	←	+PR 1LJ		**24.0125-0158.1** **24.0325-0158.1**	**425158** **525158**	Ø 312 Brake Disc Thickness [mm] 25 Minimum thickness [mm] 22 Vented + S Ø 312 Brake Disc Thickness [mm] 25 Minimum thickness [mm] 22 Vented + S
			←	+PR 1LW / 1LX		**24.0130-0220.1**	**430220**	Ø 314 Brake Disc Thickness [mm] 30 Minimum thickness [mm] 27 Vented + S
VW - TAIGO (CS1) 09/21→								
Brake Disc								
1.0 TSI 1.5 TSI	70 - 81 110	09/21→ 09/21→	←	+PR 1ZS		**24.0124-0263.1**	**424263**	Ø 275.7 Brake Disc Thickness [mm] 24 Minimum thickness [mm] 21 Vented + S
			→	+PR 1KV		**24.0109-0123.1**	**409123**	Ø 230 Brake Disc Thickness [mm] 9 Minimum thickness [mm] 7 + S

© 2022 Continental Aftermarket & Services GmbH

	kW				! #			
VW - TAIGO (CS1) 09/21→								
Wheel Brake Cylinder								
1.0 TSI 1.5 TSI	70 - 81 110	09/21→ 09/21→	→	+PR 1KA	2	**24.3220-1757.3**	**020605**	ALU
Accessory Kit, brake shoes								
1.0 TSI 1.5 TSI	70 - 81 110	09/21→ 09/21→	→	+PR 1KA		**03.0137-9309.2**	**669309**	AP
Brake Shoe Set								
1.0 TSI 1.5 TSI	70 - 81 110	09/21→ 09/21→	→	+PR 1KA		**03.0137-0540.2**	**650540**	Ø 228 Width [mm] 42 + HEB
VW - TAOS (CL1, CQ1) 07/20→								
Brake Pad Set, disc brake								
1.4 TSI	110	10/20→	←	+PR 1ZJ		**13.0460-2785.2** **13.0470-2785.2**	**602785** **LD2785**	TRW 25683 20,4 + WE / + WK TRW 25683 20,4 + WE / + WK Ceramic
Warning Contact, brake pad wear								
1.4 TSI	110	10/20→	←		1	**24.8190-0065.2**	**620065**	
Sensor, wheel speed								
1.4 TSI	110	10/20→	←	→ 12/21; ⊞		**24.0711-5273.3**	**360303**	
			←	→ 12/21; ⊞		**24.0711-5274.3**	**360304**	
			→	⊞		**24.0711-5401.3**	**360330**	
			→	⊞		**24.0711-5402.3**	**360331**	
			→		2	**24.0711-6337.3**	**360390**	
VW - T-CROSS (C11) 12/18→								
Brake Disc								
1.0 TSi 1.0 TSI 1.5 TSI 1.6 TDi	70 - 85 81 110 70	12/18→ 06/20→ 01/20→ 12/18→	←	+PR 1ZS		**24.0124-0263.1**	**424263**	Ø 275.7 Brake Disc Thickness [mm] 24 Minimum thickness [mm] 21 Vented + S
			→	+PR 1KV		**24.0109-0123.1**	**409123**	Ø 230 Brake Disc Thickness [mm] 9 Minimum thickness [mm] 7 + S
Sensor, wheel speed								
1.0 TSi 1.6 TDi	70 - 85 70	12/18→ 12/18→	←	→ 11/19; ⊞		**24.0711-5273.3**	**360303**	
			←	→ 11/19; ⊞		**24.0711-5274.3**	**360304**	
Wheel Brake Cylinder								
1.0 TSi 1.0 TSI 1.5 TSI 1.6 TDi	70 - 85 81 110 70	12/18→ 06/20→ 01/20→ 12/18→	→	+PR 1KA	2	**24.3220-1757.3**	**020605**	ALU
Accessory Kit, brake shoes								
1.0 TSi 1.0 TSI 1.5 TSI 1.6 TDi	70 - 85 81 110 70	12/18→ 06/20→ 01/20→ 12/18→	→	+PR 1KA		**03.0137-9309.2**	**669309**	AP
Brake Shoe Set								
1.0 TSi 1.0 TSI 1.5 TSI 1.6 TDi	70 - 85 81 110 70	12/18→ 06/20→ 01/20→ 12/18→	→	+PR 1KA		**03.0137-0540.2**	**650540**	Ø 228 Width [mm] 42 + HEB
VW - TIGUAN (5N_) 09/07→07/18								
Guide Bolt, brake caliper								
1.4 TSI 1.4 TSI 4motion	90 - 118 110 - 118	05/08→07/18 09/07→07/18			2	**11.8171-0008.1**	**990049**	ATE

	kW				! #			
VW - TIGUAN (5N_) 09/07→07/18								
Guide Bolt, brake caliper								
2.0 TDI 2.0 TDI 4motion 2.0 TFSI 2.0 TFSI 4motion 2.0 TSI 4motion	81 - 110 100 - 135 147 125 132 - 155	03/08→07/18 11/07→07/18 11/07→07/18 09/07→07/18 05/11→07/18			2	**11.8171-0008.1**	**990049**	ATE
2.0 TDI 4motion	103	09/07→07/18		11/07→	2	**11.8171-0008.1**	**990049**	ATE
2.0 TDI 4motion	125	09/07→07/18		01/08→	2	**11.8171-0008.1**	**990049**	ATE
2.0 TFSI 4motion	147	09/07→07/18		02/08→	2	**11.8171-0008.1**	**990049**	ATE
Brake Disc								
1.4 TSI 1.4 TSI 4motion 2.0 TDI 2.0 TDI 4motion 2.0 TFSI 4motion 2.0 TSI 4motion	90 - 118 110 - 118 81 - 110 100 - 135 125 132 - 155	05/08→07/18 09/07→07/18 03/08→07/18 11/07→07/18 09/07→07/18 05/11→07/18	←			**24.0125-0158.1** **24.0325-0158.1**	**425158** **525158**	Ø 312 Brake Disc Thickness [mm] 25 Minimum thickness [mm] 22 Vented + S Ø 312 Brake Disc Thickness [mm] 25 Minimum thickness [mm] 22 Vented + S
2.0 TDI 4motion	103	09/07→07/18	←	11/07→		**24.0125-0158.1** **24.0325-0158.1**	**425158** **525158**	Ø 312 Brake Disc Thickness [mm] 25 Minimum thickness [mm] 22 Vented + S Ø 312 Brake Disc Thickness [mm] 25 Minimum thickness [mm] 22 Vented + S
2.0 TDI 4motion	125	09/07→07/18	←	01/08→		**24.0125-0158.1** **24.0325-0158.1**	**425158** **525158**	Ø 312 Brake Disc Thickness [mm] 25 Minimum thickness [mm] 22 Vented + S Ø 312 Brake Disc Thickness [mm] 25 Minimum thickness [mm] 22 Vented + S
2.0 TFSI	147	11/07→07/18	←			**24.0125-0158.1**	**425158**	Ø 312 Brake Disc Thickness [mm] 25 Minimum thickness [mm] 22 Vented + S
2.0 TFSI 4motion	147	09/07→07/18	←	02/08→		**24.0125-0158.1** **24.0325-0158.1**	**425158** **525158**	Ø 312 Brake Disc Thickness [mm] 25 Minimum thickness [mm] 22 Vented + S Ø 312 Brake Disc Thickness [mm] 25 Minimum thickness [mm] 22 Vented + S
Sensor, wheel speed								
1.4 TSI 4motion	110 - 118	09/07→07/18	→	+PR 7X5 / 7X6; ◪		**24.0711-5401.3**	**360330**	
2.0 TDI 4motion 2.0 TFSI 4motion 2.0 TSI 4motion	100 - 135 125 132 - 155	11/07→07/18 09/07→07/18 05/11→07/18	→	+PR 7X5 / 7X6; ◪		**24.0711-5402.3**	**360331**	
2.0 TDI 4motion	103	09/07→07/18	→	11/07→; +PR 7X5 / 7X6; ◪		**24.0711-5401.3**	**360330**	
			→	11/07→; +PR 7X5 / 7X6; ◪		**24.0711-5402.3**	**360331**	
2.0 TDI 4motion	125	09/07→07/18	→	01/08→; +PR 7X5 / 7X6; ◪		**24.0711-5401.3**	**360330**	
			→	01/08→; +PR 7X5 / 7X6; ◪		**24.0711-5402.3**	**360331**	
2.0 TFSI 4motion	147	09/07→07/18	→	02/08→; +PR 7X5 / 7X6; ◪		**24.0711-5401.3**	**360330**	
			→	02/08→; +PR 7X5 / 7X6; ◪		**24.0711-5402.3**	**360331**	
VW - TIGUAN (AD1, AX1) 01/16→								
Brake Master Cylinder								
1.4 TSI 1.4 TSI 4motion 1.5 TSI	92 - 110 110 96 - 110	01/16→07/18 05/16→07/18 07/18→		for left-hand drive vehicles; +PR 1ZA / 1ZD		**24.4123-1719.3**	**011017**	TRW Ø 23.8 without brake fluid reservoir

© 2022 Continental Aftermarket & Services GmbH

	kW				! #			
VW - TIGUAN (AD1, AX1) 01/16→								
Brake Master Cylinder								
1.6 TDI 2.0 TDI 2.0 TDI 4motion 2.0 TSI 4motion 2.0 TSI R 4motion	85 81 - 90 130 - 176 140 - 180 235	05/16→06/20 05/16→ 04/16→ 06/16→ 11/20→		for left-hand drive vehicles; +PR 1ZA / 1ZD		**24.4123-1719.3**	**011017**	TRW Ø 23.8 without brake fluid reservoir
2.0 TDI 2.0 TDI 4motion 2.0 TSI 4motion	110 110 132	01/16→07/20 01/16→07/20 01/16→		02/16→; for left-hand drive vehicles; +PR 1ZA / 1ZD		**24.4123-1719.3**	**011017**	TRW Ø 23.8 without brake fluid reservoir
Brake Caliper								
1.4 eHybrid 1.4 TSI 1.4 TSI 4motion 1.5 TSI 1.6 TDI 2.0 TDI 2.0 TDI 4motion 2.0 TSI 4motion 2.0 TSI R 4motion	110 92 110 96 - 110 85 81 - 90 130 - 176 140 - 180 235	11/20→ 01/16→07/18 05/16→07/18 07/18→ 05/16→06/20 05/16→ 04/16→ 06/16→ 11/20→	←	+PR 1ZA / 1ZD;		**24.3571-1801.5**	**241387**	without holder
			←	+PR 1ZA / 1ZD;		**24.3571-1802.5**	**241388**	without holder
			←	+PR 1LA / 1LW;		**24.3601-1727.5**	**240786**	TRW without holder
			←	+PR 1LA / 1LW;		**24.3601-1728.5**	**240787**	TRW without holder
			→	+PR 1KZ;		**24.6242-7001.5**	**241335**	ATE + EMot / without holder + eFSB
			→	+PR 1KZ;		**24.6242-7002.5**	**241336**	ATE + EMot / without holder + eFSB
			→	+PR 1KU;		**24.6242-7005.5**	**241337**	ATE + EMot / without holder + eFSB
			→	+PR 1KU;		**24.6242-7006.5**	**241338**	ATE + EMot / without holder + eFSB
1.4 TSI	110	01/16→07/18	←	05/16→; +PR 1ZA / 1ZD;		**24.3571-1801.5**	**241387**	without holder
			←	05/16→; +PR 1ZA / 1ZD;		**24.3571-1802.5**	**241388**	without holder
			←	+PR 1LA / 1LW;		**24.3601-1727.5**	**240786**	TRW without holder
			←	+PR 1LA / 1LW;		**24.3601-1728.5**	**240787**	TRW without holder
			→	05/16→; +PR 1KZ;		**24.6242-7001.5**	**241335**	ATE + EMot / without holder + eFSB
			→	05/16→; +PR 1KZ;		**24.6242-7002.5**	**241336**	ATE + EMot / without holder + eFSB
			→	05/16→; +PR 1KU;		**24.6242-7005.5**	**241337**	ATE + EMot / without holder + eFSB
			→	05/16→; +PR 1KU;		**24.6242-7006.5**	**241338**	ATE + EMot / without holder + eFSB
2.0 TDI 2.0 TDI 4motion 2.0 TSI 4motion	110 110 132	01/16→07/20 01/16→07/20 01/16→	←	02/16→; +PR 1ZA / 1ZD;		**24.3571-1801.5**	**241387**	without holder
			←	02/16→; +PR 1ZA / 1ZD;		**24.3571-1802.5**	**241388**	without holder
			←	02/16→; +PR 1LA / 1LW;		**24.3601-1727.5**	**240786**	TRW without holder
			←	02/16→; +PR 1LA / 1LW;		**24.3601-1728.5**	**240787**	TRW without holder
			→	02/16→; +PR 1KZ;		**24.6242-7001.5**	**241335**	ATE + EMot / without holder + eFSB
			→	02/16→; +PR 1KZ;		**24.6242-7002.5**	**241336**	ATE + EMot / without holder + eFSB
			→	02/16→; +PR 1KU;		**24.6242-7005.5**	**241337**	ATE + EMot / without holder + eFSB
			→	02/16→; +PR 1KU;		**24.6242-7006.5**	**241338**	ATE + EMot / without holder + eFSB
Brake Pad Set, disc brake								
1.4 eHybrid 1.4 TSI 1.4 TSI 4motion 1.5 TSI 1.6 TDI 2.0 TDI 2.0 TDI 4motion 2.0 TSI 4motion	110 92 - 110 110 96 - 110 85 81 - 90 130 - 176 140 - 180	11/20→ 01/16→07/18 05/16→07/18 07/18→ 05/16→06/20 05/16→ 04/16→ 06/16→	←	+PR 1LA / 1LW		**13.0460-2617.2** **13.0470-2617.2**	**602617** **LD2617**	TRW + WK TRW + WK Ceramic
			←	+PR 1ZA / 1ZD		**13.0460-2785.2** **13.0470-2785.2**	**602785** **LD2785**	TRW 25683 20,4 + WE / + WK TRW 25683 20,4 + WE / + WK Ceramic
			→	+PR 1KU / 1KZ; + eFSB		**13.0460-7294.2** **13.0470-7294.2**	**607294** **LD7294**	ATE 25009 16,4 - WE / - WK ATE 25009 16,4 - WE / - WK Ceramic
2.0 TDI 2.0 TDI 4motion 2.0 TSI 4motion	110 110 132	01/16→07/20 01/16→07/20 01/16→	←	02/16→; +PR 1LA / 1LW		**13.0460-2617.2** **13.0470-2617.2**	**602617** **LD2617**	TRW + WK TRW + WK Ceramic
			←	+PR 1ZA / 1ZD		**13.0460-2785.2** **13.0470-2785.2**	**602785** **LD2785**	TRW 25683 20,4 + WE / + WK TRW 25683 20,4 + WE / + WK Ceramic
			→	02/16→; +PR 1KU / 1KZ; + eFSB		**13.0460-7294.2**	**607294**	ATE 25009 16,4 - WE / - WK

	kW				! #			
VW - TIGUAN (AD1, AX1) 01/16→								
Brake Pad Set, disc brake								
2.0 TDI 2.0 TDI 4motion 2.0 TSI 4motion	110 110 132	01/16→07/20 01/16→07/20 01/16→	➡	02/16→; +PR 1KU / 1KZ; + eFSB		**13.0470-7294.2**	**LD7294**	ATE 25009 16,4 - WE / - WK Ceramic
2.0 TSI R 4motion	235	11/20→	⬅	+PR 1LA / 1LW		**13.0460-2617.2**	**602617**	TRW + WK
			⬅	+PR 1ZA / 1ZD		**13.0460-2785.2**	**602785**	TRW 25683 20,4 + WE / + WK
			➡	+PR 1KU / 1KZ; + eFSB		**13.0460-7294.2**	**607294**	ATE 25009 16,4 - WE / - WK
Warning Contact, brake pad wear								
1.4 eHybrid	110	11/20→	⬅	+PR 1ZA / 1ZD	1	**24.8190-0065.2**	**620065**	
1.4 TSI	92 - 110	01/16→07/18	⬅	+PR 1ZA / 1ZD	1	**24.8190-0065.2**	**620065**	
1.4 TSI 4motion 1.5 TSI 1.6 TDI 2.0 TDI 2.0 TDI 4motion 2.0 TSI 4motion 2.0 TSI R 4motion	110 96 - 110 85 81 - 90 130 - 176 140 - 180 235	05/16→07/18 07/18→ 05/16→06/20 05/16→ 04/16→ 06/16→ 11/20→	⬅	+PR 1LA / 1LW	1	**24.8190-0065.2**	**620065**	
2.0 TDI 2.0 TDI 4motion 2.0 TSI 4motion	110 110 132	01/16→07/20 01/16→07/20 01/16→	⬅	02/16→; +PR 1ZA / 1ZD	1	**24.8190-0065.2**	**620065**	
			⬅	02/16→; +PR 1LA / 1LW	1	**24.8190-0065.2**	**620065**	
Brake Disc								
1.4 eHybrid 1.4 TSI 1.4 TSI 4motion 1.5 TSI 1.6 TDI 2.0 TDI 2.0 TDI 4motion 2.0 TSI 4motion 2.0 TSI R 4motion	110 92 - 110 110 96 - 110 85 81 - 90 130 - 147 140 - 180 235	11/20→ 01/16→07/18 05/16→07/18 07/18→ 05/16→06/20 05/16→ 04/16→ 06/16→ 11/20→	⬅	+PR 1ZA / 1ZD		**24.0125-0158.1**	**425158**	Ø 312 Brake Disc Thickness [mm] 25 Minimum thickness [mm] 22 Vented + S
			⬅	+PR 1LW		**24.0130-0220.1**	**430220**	Ø 314 Brake Disc Thickness [mm] 30 Minimum thickness [mm] 27 Vented + S
			⬅	+PR 1LA		**24.0130-0225.1**	**430225**	Ø 340 Brake Disc Thickness [mm] 30 Minimum thickness [mm] 27 Vented + S
			➡	+PR 1KU; + eFSB		**24.0112-0210.1**	**412210**	Ø 300 Brake Disc Thickness [mm] 12 Minimum thickness [mm] 10 + S
			➡	+PR 1KZ; + eFSB		**24.0122-0219.1**	**422219**	Ø 310 Brake Disc Thickness [mm] 22 Minimum thickness [mm] 20 Vented
2.0 TDI 2.0 TDI 4motion 2.0 TSI 4motion	110 110 132	01/16→07/20 01/16→07/20 01/16→	⬅	02/16→; +PR 1ZA / 1ZD		**24.0125-0158.1**	**425158**	Ø 312 Brake Disc Thickness [mm] 25 Minimum thickness [mm] 22 Vented + S
			⬅	02/16→; +PR 1LW		**24.0130-0220.1**	**430220**	Ø 314 Brake Disc Thickness [mm] 30 Minimum thickness [mm] 27 Vented + S
			⬅	02/16→; +PR 1LA		**24.0130-0225.1**	**430225**	Ø 340 Brake Disc Thickness [mm] 30 Minimum thickness [mm] 27 Vented + S
			➡	02/16→; +PR 1KU; + eFSB		**24.0112-0210.1**	**412210**	Ø 300 Brake Disc Thickness [mm] 12 Minimum thickness [mm] 10 + S
			➡	02/16→; +PR 1KZ; + eFSB		**24.0122-0219.1**	**422219**	Ø 310 Brake Disc Thickness [mm] 22 Minimum thickness [mm] 20 Vented
2.0 TDI 4motion	176	05/16→07/20	⬅	+PR 1ZA / 1ZD		**24.0125-0158.1**	**425158**	Ø 312 Brake Disc Thickness [mm] 25 Minimum thickness [mm] 22 Vented + S
			⬅	+PR 1LA		**24.0130-0225.1**	**430225**	Ø 340 Brake Disc Thickness [mm] 30 Minimum thickness [mm] 27 Vented + S
			➡	+PR 1KU; + eFSB		**24.0112-0210.1**	**412210**	Ø 300 Brake Disc Thickness [mm] 12 Minimum thickness [mm] 10 + S

© 2022 Continental Aftermarket & Services GmbH

	kW				! #			
VW - TIGUAN (AD1, AX1) 01/16→								
Brake Disc								
2.0 TDI 4motion	176	05/16→07/20	➡	+PR 1KZ; + eFSB		**24.0122-0219.1**	**422219**	Ø 310 Brake Disc Thickness [mm] 22 Minimum thickness [mm] 20 Vented
Sensor, wheel speed								
1.4 eHybrid 1.4 TSI 1.5 TSI 1.6 TDI 2.0 TDI	110 92 - 110 96 - 110 85 81 - 90	11/20→ 01/16→07/18 07/18→ 05/16→06/20 05/16→	⬅	◪		**24.0711-5273.3**	**360303**	
			⬅	◩		**24.0711-5274.3**	**360304**	
			➡		2	**24.0711-6337.3**	**360390**	
1.4 TSI 4motion 2.0 TDI 4motion 2.0 TSI 4motion 2.0 TSI R 4motion	110 130 - 176 140 - 180 235	05/16→07/18 04/16→ 06/16→ 11/20→	⬅	◪		**24.0711-5273.3**	**360303**	
			⬅	◩		**24.0711-5274.3**	**360304**	
			➡	◪		**24.0711-5401.3**	**360330**	
			➡	◩		**24.0711-5402.3**	**360331**	
2.0 TDI	110	01/16→07/20	⬅	02/16→; ◪		**24.0711-5273.3**	**360303**	
			⬅	02/16→; ◩		**24.0711-5274.3**	**360304**	
			➡	02/16→	2	**24.0711-6337.3**	**360390**	
2.0 TDI 4motion 2.0 TSI 4motion	110 132	01/16→07/20 01/16→	⬅	02/16→; ◪		**24.0711-5273.3**	**360303**	
			⬅	02/16→; ◩		**24.0711-5274.3**	**360304**	
			➡	02/16→; ◪		**24.0711-5401.3**	**360330**	
			➡	02/16→; ◩		**24.0711-5402.3**	**360331**	
Control Element, parking brake caliper								
1.4 eHybrid 1.4 TSI 1.4 TSI 4motion 1.5 TSI 1.6 TDI 2.0 TDI 2.0 TDI 4motion 2.0 TSI 4motion 2.0 TSI R 4motion	110 92 - 110 110 96 - 110 85 81 - 110 110 - 176 132 - 180 235	11/20→ 01/16→07/18 05/16→07/18 07/18→ 05/16→06/20 01/16→ 01/16→ 01/16→ 11/20→	➡	+PR 1KU / 1KZ; ◪		**11.9282-1001.3**	**250159**	ATE
			➡	+PR 1KU / 1KZ; ◩		**11.9282-1002.3**	**250160**	ATE
VW - TIGUAN ALLSPACE (BW2, BJ2) 03/17→								
Brake Caliper								
1.4 TSI 1.4 TSI E100 Flex 1.5 TSI 2.0 TDI 2.0 TDI 4motion 2.0 TSI 2.0 TSI 4motion	110 110 110 110 110 - 176 137 132 - 180	06/17→07/21 07/17→ 09/18→ 06/17→ 06/17→ 04/17→ 03/17→	⬅	+PR 1LA / 1LB / 1LW / 1LX; ◪		**24.3601-1727.5**	**240786**	TRW without holder
			⬅	+PR 1LA / 1LB / 1LW / 1LX; ◩		**24.3601-1728.5**	**240787**	TRW without holder
			➡	+PR 1KZ; ◪		**24.6242-7001.5**	**241335**	ATE + EMot / without holder + eFSB
			➡	+PR 1KZ; ◩		**24.6242-7002.5**	**241336**	ATE + EMot / without holder + eFSB
			➡	+PR 1KU; ◪		**24.6242-7005.5**	**241337**	ATE + EMot / without holder + eFSB
			➡	+PR 1KU; ◩		**24.6242-7006.5**	**241338**	ATE + EMot / without holder + eFSB
Brake Pad Set, disc brake								
1.4 TSI 1.4 TSI E100 Flex 1.5 TSI 2.0 TDI 2.0 TDI 4motion 2.0 TSI 2.0 TSI 4motion	110 110 110 110 140 - 176 137 132 - 180	06/17→07/21 07/17→ 09/18→ 06/17→ 06/17→ 04/17→ 03/17→	⬅	+PR 1LA / 1LW		**13.0460-2617.2** **13.0470-2617.2**	**602617** **LD2617**	TRW + WK TRW + WK Ceramic
			➡	+PR 1KU / 1KZ / 2EM		**13.0460-7294.2** **13.0470-7294.2**	**607294** **LD7294**	ATE 25009 16,4 - WE / - WK ATE 25009 16,4 - WE / - WK Ceramic
2.0 TDI 4motion	110	06/17→	⬅	+PR 1LA / 1LW		**13.0460-2617.2** **13.0470-2617.2**	**602617** **LD2617**	TRW + WK TRW + WK Ceramic
			⬅	+PR 1ZA / 1ZK		**13.0460-2785.2** **13.0470-2785.2**	**602785** **LD2785**	TRW 25683 20,4 + WE / + WK TRW 25683 20,4 + WE / + WK Ceramic

	kW				! #			
VW - TIGUAN ALLSPACE (BW2, BJ2) 03/17→								
Brake Pad Set, disc brake								
2.0 TDI 4motion	110	06/17→	→	+PR 1KU / 1KZ / 2EM		**13.0460-7294.2**	**607294**	ATE 25009 16,4 - WE / - WK
						13.0470-7294.2	**LD7294**	ATE 25009 16,4 - WE / - WK Ceramic
Warning Contact, brake pad wear								
1.4 TSI 1.4 TSI E100 Flex 1.5 TSI 2.0 TDI 2.0 TDI 4motion 2.0 TSI 2.0 TSI 4motion	110 110 110 110 110 - 176 137 132 - 180	06/17→07/21 07/17→ 09/18→ 06/17→ 06/17→ 04/17→ 03/17→	←		1	**24.8190-0065.2**	**620065**	
Brake Disc								
1.4 TSI 1.4 TSI E100 Flex 1.5 TSI 2.0 TDI 2.0 TDI 4motion 2.0 TSI 2.0 TSI 4motion	110 110 110 110 140 - 176 137 132 - 180	06/17→07/21 07/17→ 09/18→ 06/17→ 06/17→ 04/17→ 03/17→	←	+PR 1LW / 1LX		**24.0130-0220.1**	**430220**	Ø 314 Brake Disc Thickness [mm] 30 Minimum thickness [mm] 27 Vented + S
			←	+PR 1LA / 1LB		**24.0130-0225.1**	**430225**	Ø 340 Brake Disc Thickness [mm] 30 Minimum thickness [mm] 27 Vented + S
			→	+PR 1KU / 2EM		**24.0112-0210.1**	**412210**	Ø 300 Brake Disc Thickness [mm] 12 Minimum thickness [mm] 10 + S
			→	+PR 1KZ		**24.0122-0219.1**	**422219**	Ø 310 Brake Disc Thickness [mm] 22 Minimum thickness [mm] 20 Vented
2.0 TDI 4motion	110	06/17→	←			**24.0125-0158.1**	**425158**	Ø 312 Brake Disc Thickness [mm] 25 Minimum thickness [mm] 22 Vented + S
			←	+PR 1LW / 1LX		**24.0130-0220.1**	**430220**	Ø 314 Brake Disc Thickness [mm] 30 Minimum thickness [mm] 27 Vented + S
			←	+PR 1LA / 1LB		**24.0130-0225.1**	**430225**	Ø 340 Brake Disc Thickness [mm] 30 Minimum thickness [mm] 27 Vented + S
			→	+PR 1KU / 2EM		**24.0112-0210.1**	**412210**	Ø 300 Brake Disc Thickness [mm] 12 Minimum thickness [mm] 10 + S
			→	+PR 1KZ		**24.0122-0219.1**	**422219**	Ø 310 Brake Disc Thickness [mm] 22 Minimum thickness [mm] 20 Vented
Sensor, wheel speed								
1.4 TSI 1.4 TSI E100 Flex 1.5 TSI 2.0 TDI 2.0 TDI 4motion 2.0 TSI 2.0 TSI 4motion	110 110 110 110 110 - 176 137 132 - 180	06/17→07/21 07/17→ 09/18→ 06/17→ 06/17→ 04/17→ 03/17→	←	◪		**24.0711-5273.3**	**360303**	
			←	◪		**24.0711-5274.3**	**360304**	
			→	◪		**24.0711-5401.3**	**360330**	
			→	◪		**24.0711-5402.3**	**360331**	
Control Element, parking brake caliper								
1.4 TSI 1.4 TSI E100 Flex 1.5 TSI 2.0 TDI 2.0 TDI 4motion 2.0 TSI 2.0 TSI 4motion	110 110 110 110 110 - 176 137 132 - 180	06/17→07/21 07/17→ 09/18→ 06/17→ 06/17→ 04/17→ 03/17→	→	+PR 1KU / 1KZ; ◪		**11.9282-1001.3**	**250159**	ATE
			→	+PR 1KU / 1KZ; ◪		**11.9282-1002.3**	**250160**	ATE
VW - TIGUAN SUV Van (AD1) 07/15→								
Brake Master Cylinder								
TDI BlueMotion	140	01/16→07/20		for left-hand drive vehicles; +PR 1ZA / 1ZD		**24.4123-1719.3**	**011017**	TRW Ø 23.8 without brake fluid reservoir

© 2022 Continental Aftermarket & Services GmbH

	kW				! #			
VW - TIGUAN SUV Van (AD1) 07/15→								
Brake Caliper								
TDI BlueMotion	140	01/16→07/20	←	+PR 1ZA / 1ZD;		**24.3571-1801.5**	**241387**	without holder
			←	+PR 1ZA / 1ZD;		**24.3571-1802.5**	**241388**	without holder
			←	+PR 1LA / 1LW;		**24.3601-1727.5**	**240786**	TRW without holder
			←	+PR 1LA / 1LW;		**24.3601-1728.5**	**240787**	TRW without holder
			→	+PR 1KZ;		**24.6242-7001.5**	**241335**	ATE + EMot / without holder + eFSB
			→	+PR 1KZ;		**24.6242-7002.5**	**241336**	ATE + EMot / without holder + eFSB
			→	+PR 1KU;		**24.6242-7005.5**	**241337**	ATE + EMot / without holder + eFSB
			→	+PR 1KU;		**24.6242-7006.5**	**241338**	ATE + EMot / without holder + eFSB
Brake Pad Set, disc brake								
TDI BlueMotion	140	01/16→07/20	←	+PR 1LA / 1LW		**13.0460-2617.2** **13.0470-2617.2**	**602617** **LD2617**	TRW + WK TRW + WK Ceramic
			←	+PR 1ZA / 1ZD		**13.0460-2785.2** **13.0470-2785.2**	**602785** **LD2785**	TRW 25683 20,4 + WE / + WK TRW 25683 20,4 + WE / + WK Ceramic
			→	+PR 1KU / 1KZ; + eFSB		**13.0460-7294.2** **13.0470-7294.2**	**607294** **LD7294**	ATE 25009 16,4 - WE / - WK ATE 25009 16,4 - WE / - WK Ceramic
Warning Contact, brake pad wear								
TDI BlueMotion	140	01/16→07/20	←	+PR 1LA / 1LW	1	**24.8190-0065.2**	**620065**	
			←	+PR 1ZA / 1ZD	1	**24.8190-0065.2**	**620065**	
Brake Disc								
TDI BlueMotion	140	01/16→07/20	←	+PR 1ZA / 1ZD		**24.0125-0158.1** **24.0325-0158.1**	**425158** **525158**	Ø 312 Brake Disc Thickness [mm] 25 Minimum thickness [mm] 22 Vented + S Ø 312 Brake Disc Thickness [mm] 25 Minimum thickness [mm] 22 Vented + S
			←	+PR 1LW		**24.0130-0220.1**	**430220**	Ø 314 Brake Disc Thickness [mm] 30 Minimum thickness [mm] 27 Vented + S
			←	+PR 1LA		**24.0130-0225.1**	**430225**	Ø 340 Brake Disc Thickness [mm] 30 Minimum thickness [mm] 27 Vented + S
			→	+PR 1KU; + eFSB		**24.0112-0210.1**	**412210**	Ø 300 Brake Disc Thickness [mm] 12 Minimum thickness [mm] 10 + S
			→	+PR 1KZ; + eFSB		**24.0122-0219.1**	**422219**	Ø 310 Brake Disc Thickness [mm] 22 Minimum thickness [mm] 20 Vented
Sensor, wheel speed								
TDI BlueMotion	140	01/16→07/20	←			**24.0711-5273.3**	**360303**	
			←			**24.0711-5274.3**	**360304**	
			→			**24.0711-5401.3**	**360330**	
			→			**24.0711-5402.3**	**360331**	
Control Element, parking brake caliper								
TDI BlueMotion	140	01/16→07/20	→	+PR 1KU / 1KZ;		**11.9282-1001.3**	**250159**	ATE
			→	+PR 1KU / 1KZ;		**11.9282-1002.3**	**250160**	ATE
VW - TIGUAN VAN (5N_) 09/07→07/18								
Guide Bolt, brake caliper								
1.4 TSI 1.4 TSI 4motion 2.0 TDI	90 - 118 118 81 - 103	05/08→07/18 09/12→07/18 11/09→07/18			2	**11.8171-0008.1**	**990049**	ATE

	kW				! #			
VW - TIGUAN VAN (5N_) 09/07→07/18								
Guide Bolt, brake caliper								
2.0 TDI 4motion 2.0 TSI 4motion	103 - 130 125 - 155	11/07→07/18 11/09→07/18			2	**11.8171-0008.1**	**990049**	ATE
Brake Disc								
1.4 TSI 1.4 TSI 4motion 2.0 TDI 2.0 TDI 4motion 2.0 TSI 4motion	90 - 118 118 81 - 103 103 - 130 125 - 155	05/08→07/18 09/12→07/18 11/09→07/18 11/07→07/18 11/09→07/18	←			**24.0125-0158.1** **24.0325-0158.1**	**425158** **525158**	Ø 312 Brake Disc Thickness [mm] 25 Minimum thickness [mm] 22 Vented + S Ø 312 Brake Disc Thickness [mm] 25 Minimum thickness [mm] 22 Vented + S
Sensor, wheel speed								
1.4 TSI 4motion 2.0 TDI 4motion 2.0 TSI 4motion	118 103 - 130 125 - 155	09/12→07/18 11/07→07/18 11/09→07/18	→ →	+PR 7X5 / 7X6; ◪ +PR 7X5 / 7X6; ◪		**24.0711-5401.3** **24.0711-5402.3**	**360330** **360331**	
VW - TOUAREG (7LA, 7L6, 7L7) 10/02→01/13								
Guide Bolt, brake caliper								
2.5 R5 TDI 3.0 TDI 3.0 V6 TDI	120 - 128 155 165 - 176	01/03→05/10 04/06→05/10 11/04→05/10		+PR 1KE; → 03/10	2	**11.8171-0008.1**	**990049**	ATE
3.2 V6	162	10/02→11/06		11/02→; +PR 1KE; → 12/05	2	**11.8171-0008.1**	**990049**	ATE
3.2 V6	177	11/04→11/06		+PR 1KE; → 12/05	2	**11.8171-0008.1**	**990049**	ATE
3.6 V6 FSI	206	10/05→05/10		01/06→ 03/10; +PR 1KE	2	**11.8171-0008.1**	**990049**	ATE
4.2 V8	228	12/02→11/06		+PR 1KE	2	**11.8171-0008.1**	**990049**	ATE
4.2 V8 FSI	257	06/06→05/10		12/06→ 03/10; +PR 1KE	2	**11.8171-0008.1**	**990049**	ATE
5.0 R50 TDI	257	08/07→05/10		01/08→ 03/10; +PR 1KE	2	**11.8171-0008.1**	**990049**	ATE
5.0 V10 TDI	230	10/02→05/10		11/02→; +PR 1KE; → 03/10	2	**11.8171-0008.1**	**990049**	ATE
6.0 W12	331	08/04→05/10		+PR 1KE; → 11/06	2	**11.8171-0008.1**	**990049**	ATE
Sensor, wheel speed								
2.5 R5 TDI 3.0 TDI 3.0 V6 TDI	120 - 128 155 165 - 176	01/03→05/10 04/06→05/10 11/04→05/10	← ← → →	→ 03/10; ◪ → 03/10; ◪ → 03/10; ◪ → 03/10; ◪		**24.0711-5401.3** **24.0711-5402.3** **24.0711-5401.3** **24.0711-5402.3**	**360330** **360331** **360330** **360331**	
3.2 V6	162	10/02→11/06	← ← → →	11/02→ 12/05; ◪ 11/02→ 12/05; ◪ 11/02→ 12/05; ◪ 11/02→ 12/05; ◪		**24.0711-5401.3** **24.0711-5402.3** **24.0711-5401.3** **24.0711-5402.3**	**360330** **360331** **360330** **360331**	
3.2 V6	177	11/04→11/06	← ← → →	→ 12/05; ◪ → 12/05; ◪ → 12/05; ◪ → 12/05; ◪		**24.0711-5401.3** **24.0711-5402.3** **24.0711-5401.3** **24.0711-5402.3**	**360330** **360331** **360330** **360331**	
3.6 V6 FSI	206	10/05→05/10	← ← → →	01/06→ 03/10; ◪ 01/06→ 03/10; ◪ 01/06→ 03/10; ◪ 01/06→ 03/10; ◪		**24.0711-5401.3** **24.0711-5402.3** **24.0711-5401.3** **24.0711-5402.3**	**360330** **360331** **360330** **360331**	
4.2 V8	228	12/02→11/06	← ← → →	◪ ◪ ◪ ◪		**24.0711-5401.3** **24.0711-5402.3** **24.0711-5401.3** **24.0711-5402.3**	**360330** **360331** **360330** **360331**	
4.2 V8 FSI	257	06/06→05/10	← ← → →	12/06→ 03/10; ◪ 12/06→ 03/10; ◪ 12/06→ 03/10; ◪ 12/06→ 03/10; ◪		**24.0711-5401.3** **24.0711-5402.3** **24.0711-5401.3** **24.0711-5402.3**	**360330** **360331** **360330** **360331**	

© 2022 Continental Aftermarket & Services GmbH

	kW				! #			
VW - TOUAREG (7LA, 7L6, 7L7) 10/02→01/13								
Sensor, wheel speed								
5.0 R50 TDI	257	08/07→05/10	←	01/08→ 03/10;		**24.0711-5401.3**	**360330**	
			←	01/08→ 03/10;		**24.0711-5402.3**	**360331**	
			→	01/08→ 03/10;		**24.0711-5401.3**	**360330**	
			→	01/08→ 03/10;		**24.0711-5402.3**	**360331**	
5.0 V10 TDI	230	10/02→05/10	←	11/02→ 03/10;		**24.0711-5401.3**	**360330**	
			←	11/02→ 03/10;		**24.0711-5402.3**	**360331**	
			→	11/02→ 03/10;		**24.0711-5401.3**	**360330**	
			→	11/02→ 03/10;		**24.0711-5402.3**	**360331**	
6.0 W12	331	08/04→05/10	←	→ 11/06;		**24.0711-5401.3**	**360330**	
			←	→ 11/06;		**24.0711-5402.3**	**360331**	
			→	→ 11/06;		**24.0711-5401.3**	**360330**	
			→	→ 11/06;		**24.0711-5402.3**	**360331**	
Accessory Kit, parking brake shoes								
2.5 R5 TDI	120 - 128	01/03→05/10		+PR 1KF / 1KQ / 2ED; → 03/10		**03.0137-9700.2**	**669700**	
3.0 TDI 3.0 V6 TDI	155 165 - 176	04/06→05/10 11/04→05/10		+PR 1KE; → 03/10		**03.0137-9700.2**	**669700**	
3.2 V6	162	10/02→11/06		11/02→; +PR 1KF / 1KQ / 2ED; → 12/05		**03.0137-9700.2**	**669700**	
				11/02→; +PR 1KE; → 12/05		**03.0137-9700.2**	**669700**	
3.2 V6	177	11/04→11/06		+PR 1KF / 1KQ / 2ED; → 12/05		**03.0137-9700.2**	**669700**	
				+PR 1KE; → 12/05		**03.0137-9700.2**	**669700**	
3.6 V6 FSI	206	10/05→05/10		01/06→ 03/10; +PR 1KF / 1KQ / 2ED		**03.0137-9700.2**	**669700**	
				01/06→ 03/10; +PR 1KE		**03.0137-9700.2**	**669700**	
4.2 V8	228	12/02→11/06		+PR 1KF / 1KQ / 2ED		**03.0137-9700.2**	**669700**	
				+PR 1KE		**03.0137-9700.2**	**669700**	
4.2 V8 FSI	257	06/06→05/10		12/06→ 03/10; +PR 1KF / 1KQ / 2ED		**03.0137-9700.2**	**669700**	
				12/06→ 03/10; +PR 1KE		**03.0137-9700.2**	**669700**	
5.0 R50 TDI	257	08/07→05/10		01/08→ 03/10; +PR 1KE		**03.0137-9700.2**	**669700**	
				01/08→ 03/10; +PR 1KF / 1KQ / 2ED		**03.0137-9700.2**	**669700**	
5.0 V10 TDI	230	10/02→05/10		11/02→; +PR 1KF / 1KQ / 2ED; → 03/10		**03.0137-9700.2**	**669700**	
				11/02→; +PR 1KE; → 03/10		**03.0137-9700.2**	**669700**	
6.0 W12	331	08/04→05/10		+PR 1KF / 1KQ / 2ED; → 11/06		**03.0137-9700.2**	**669700**	
				+PR 1KE; → 11/06		**03.0137-9700.2**	**669700**	
VW - TOUAREG (7P5, 7P6) 01/10→12/18								
Accessory Kit, parking brake shoes								
3.0 V6 TDI	150 - 176	01/10→03/18	→	04/10→		**03.0137-9354.2**	**669354**	
4.2 V8 TDI	250	01/10→03/18						
3.0 V6 TDI	165 - 193	06/10→03/18	→			**03.0137-9354.2**	**669354**	
3.0 V6 TSI	213	08/10→03/18						
3.0 V6 TSI Hybrid	245	04/10→03/18						
3.6 V6 FSI	183 - 206	04/10→03/18						
4.2 V8 FSI	265	01/11→03/18						
VW - TOUAREG VAN (7P5) 01/10→12/18								
Accessory Kit, parking brake shoes								
3.0 TDI 4motion	180	05/11→12/14	→			**03.0137-9354.2**	**669354**	
VW - TOURAN (1T1, 1T2) 02/03→05/10								
Guide Bolt, brake caliper								
1.4 TSI	103	02/06→05/10		09/06→; +PR 1ZE / 1ZP	2	**11.8171-0008.1**	**990049**	ATE
				09/06→; +PR 1LJ / 1ZA / 1ZD	2	**11.8171-0008.1**	**990049**	ATE
1.4 TSI	125	11/06→05/10		+PR 1ZE / 1ZP	2	**11.8171-0008.1**	**990049**	ATE
1.4 TSI EcoFuel	110	05/09→05/10		+PR 1LJ / 1ZA / 1ZD	2	**11.8171-0008.1**	**990049**	ATE
1.6	75	07/03→05/10						
1.6 BiFuel	75	11/06→05/10						
1.6 FSI	85	02/03→01/07						
1.9 TDI	66 - 77	02/03→05/10						
2.0 EcoFuel	80	02/06→05/09						
2.0 FSI	110	10/03→01/07						
2.0 TDI	103	12/05→05/10						

VW - TOURAN (1T1, 1T2) 02/03→05/10

Guide Bolt, brake caliper

	kW				! #			
2.0 TDI 16V	103	08/03→05/10		+PR 1ZE / 1ZP	2	**11.8171-0008.1**	**990049**	ATE
				+PR 1LJ / 1ZA / 1ZD	2	**11.8171-0008.1**	**990049**	ATE
2.0 TDI	100	02/03→05/10		08/03→; +PR 1ZE / 1ZP	2	**11.8171-0008.1**	**990049**	ATE
				08/03→; +PR 1LJ / 1ZA / 1ZD	2	**11.8171-0008.1**	**990049**	ATE
2.0 TDI	125	12/05→05/10		02/06→; +PR 1ZE / 1ZP	2	**11.8171-0008.1**	**990049**	ATE
				02/06→; +PR 1LJ / 1ZA / 1ZD	2	**11.8171-0008.1**	**990049**	ATE

Brake Disc

1.4 TSI	103	02/06→05/10	←	09/06→; +PR 1ZE / 1ZP		**24.0125-0145.1**	**425145**	Ø 288 Brake Disc Thickness [mm] 25 Minimum thickness [mm] 22 Vented + S
			←	09/06→; +PR 1LJ / 1ZA / 1ZD		**24.0125-0158.1**	**425158**	Ø 312 Brake Disc Thickness [mm] 25 Minimum thickness [mm] 22 Vented + S
						24.0325-0158.1	**525158**	Ø 312 Brake Disc Thickness [mm] 25 Minimum thickness [mm] 22 Vented + S
			→	09/06→; +PR 1KS		**24.0110-0356.1**	**410356**	Ø 272 Brake Disc Thickness [mm] 9.7 Minimum thickness [mm] 8 + S
1.4 TSI 1.4 TSI EcoFuel 1.6 1.6 FSI 1.9 TDI 2.0 EcoFuel 2.0 FSI 2.0 TDI 2.0 TDI 16V	125 110 75 85 66 - 77 80 110 103 103	11/06→05/10 05/09→05/10 07/03→05/10 02/03→01/07 02/03→05/10 02/06→05/09 10/03→01/07 12/05→05/10 08/03→05/10	←	+PR 1ZE / 1ZP		**24.0125-0145.1**	**425145**	Ø 288 Brake Disc Thickness [mm] 25 Minimum thickness [mm] 22 Vented + S
			←	+PR 1LJ / 1ZA / 1ZD		**24.0125-0158.1**	**425158**	Ø 312 Brake Disc Thickness [mm] 25 Minimum thickness [mm] 22 Vented + S
						24.0325-0158.1	**525158**	Ø 312 Brake Disc Thickness [mm] 25 Minimum thickness [mm] 22 Vented + S
			→	+PR 1KS		**24.0110-0356.1**	**410356**	Ø 272 Brake Disc Thickness [mm] 9.7 Minimum thickness [mm] 8 + S
1.6 BiFuel	75	11/06→05/10	←	+PR 1ZE / 1ZP		**24.0125-0145.1**	**425145**	Ø 288 Brake Disc Thickness [mm] 25 Minimum thickness [mm] 22 Vented + S
			←	+PR 1LJ / 1ZA / 1ZD		**24.0125-0158.1**	**425158**	Ø 312 Brake Disc Thickness [mm] 25 Minimum thickness [mm] 22 Vented + S
			→	+PR 1KS		**24.0110-0356.1**	**410356**	Ø 272 Brake Disc Thickness [mm] 9.7 Minimum thickness [mm] 8 + S
2.0 TDI	100	02/03→05/10	←	08/03→; +PR 1ZE / 1ZP		**24.0125-0145.1**	**425145**	Ø 288 Brake Disc Thickness [mm] 25 Minimum thickness [mm] 22 Vented + S
			←	08/03→; +PR 1LJ / 1ZA / 1ZD		**24.0125-0158.1**	**425158**	Ø 312 Brake Disc Thickness [mm] 25 Minimum thickness [mm] 22 Vented + S
						24.0325-0158.1	**525158**	Ø 312 Brake Disc Thickness [mm] 25 Minimum thickness [mm] 22 Vented + S
			→	08/03→; +PR 1KS		**24.0110-0356.1**	**410356**	Ø 272 Brake Disc Thickness [mm] 9.7 Minimum thickness [mm] 8 + S
2.0 TDI	125	12/05→05/10	←	02/06→; +PR 1ZE / 1ZP		**24.0125-0145.1**	**425145**	Ø 288 Brake Disc Thickness [mm] 25 Minimum thickness [mm] 22 Vented + S
			←	02/06→; +PR 1LJ / 1ZA / 1ZD		**24.0125-0158.1**	**425158**	Ø 312 Brake Disc Thickness [mm] 25 Minimum thickness [mm] 22 Vented + S

© 2022 Continental Aftermarket & Services GmbH

	kW				! #			
VW - TOURAN (1T1, 1T2) 02/03→05/10								
Brake Disc								
2.0 TDI	125	12/05→05/10	←	02/06→; +PR 1LJ / 1ZA / 1ZD		**24.0325-0158.1**	**525158**	Ø 312 Brake Disc Thickness [mm] 25 Minimum thickness [mm] 22 Vented + S
			→	02/06→; +PR 1KS		**24.0110-0356.1**	**410356**	Ø 272 Brake Disc Thickness [mm] 9.7 Minimum thickness [mm] 8 + S
Slave Cylinder, clutch								
1.4 TSI	103 - 125	02/06→05/10		11/09→; +PR 0EM		**24.2519-1706.3**	**040096**	Ø 19
1.4 TSI EcoFuel	110	05/09→05/10						
1.6	75	07/03→05/10						
1.6 BiFuel	75	11/06→05/10						
1.9 TDI	66 - 77	08/03→05/10						
2.0 TDI	100 - 125	02/03→05/10						
2.0 TDI 16V	103	08/03→05/10						
VW - TOURAN (1T3) 05/10→05/15								
Guide Bolt, brake caliper								
1.2 TSI	77	05/10→05/15		+PR 1ZE / 1ZP	2	**11.8171-0008.1**	**990049**	ATE
1.4 TSI	103 - 125	05/10→05/15		+PR 1LJ / 1ZA / 1ZD	2	**11.8171-0008.1**	**990049**	ATE
1.4 TSI EcoFuel	110	05/10→05/15						
1.6 TDI	66 - 77	05/10→05/15						
2.0 TDI	81 - 130	05/10→05/15						
Brake Disc								
1.2 TSI	77	05/10→05/15	←	+PR 1ZE / 1ZP		**24.0125-0145.1**	**425145**	Ø 288 Brake Disc Thickness [mm] 25 Minimum thickness [mm] 22 Vented + S
1.4 TSI	103 - 125	05/10→05/15						
1.4 TSI EcoFuel	110	05/10→05/15						
1.6 TDI	66 - 77	05/10→05/15	←	+PR 1LJ / 1ZA / 1ZD		**24.0125-0158.1**	**425158**	Ø 312 Brake Disc Thickness [mm] 25 Minimum thickness [mm] 22 Vented + S
2.0 TDI	81 - 130	05/10→05/15				**24.0325-0158.1**	**525158**	Ø 312 Brake Disc Thickness [mm] 25 Minimum thickness [mm] 22 Vented + S
			→			**24.0110-0356.1**	**410356**	Ø 272 Brake Disc Thickness [mm] 9.7 Minimum thickness [mm] 8 + S
Slave Cylinder, clutch								
1.2 TSI	77	05/10→05/15		+PR 0EM		**24.2519-1706.3**	**040096**	Ø 19
1.4 TSI	103 - 125	05/10→05/15						
1.4 TSI EcoFuel	110	05/10→05/15						
1.6 TDI	66 - 77	05/10→05/15						
2.0 TDI	81 - 130	05/10→05/15						
VW - TOURAN (5T1) 05/15→								
Brake Master Cylinder								
1.0 TSI	85	12/18→		for left-hand drive vehicles		**24.4123-1719.3**	**011017**	TRW Ø 23.8 without brake fluid reservoir
1.2 TSI	81	05/15→						
1.4 TSI	110	05/15→						
1.5 TSI	110	11/18→						
1.6 TDI	81 - 85	05/15→						
1.8 TSI	132	11/15→						
2.0 TDI	81 - 140	05/15→						
Brake Caliper								
1.0 TSI	85	12/18→	←	+PR 1ZA / 1ZD / 1ZK / 1ZL; ◪		**24.3571-1801.5**	**241387**	without holder
1.2 TSI	81	05/15→						
1.4 TSI	110	05/15→	←	+PR 1ZA / 1ZD / 1ZK / 1ZL; ◪		**24.3571-1802.5**	**241388**	without holder
1.5 TSI	110	11/18→	→	+PR 1KE / 1KR; ◪		**24.6238-7023.5**	**241241**	ATE without holder + eFSB
1.6 TDI	81 - 85	05/15→				**24.6238-7047.5**	**241181**	ATE without holder + eFSB
1.8 TSI	132	11/15→	→	+PR 1KE / 1KR; ◪		**24.6238-7024.5**	**241242**	ATE without holder + eFSB

VW - TOURAN (5T1) 05/15→

	kW				! #			
Brake Caliper								
2.0 TDI	81 - 140	05/15→	➡	+PR 1KE / 1KR;		**24.6238-7048.5**	**241182**	ATE without holder + eFSB
			➡	+PR 2EM;		**24.6242-7005.5**	**241337**	ATE + EMot / without holder + eFSB
			➡	+PR 2EM;		**24.6242-7006.5**	**241338**	ATE + EMot / without holder + eFSB
Brake Pad Set, disc brake								
1.0 TSI 1.2 TSI 1.4 TSI 1.5 TSI 1.6 TDI 1.8 TSI 2.0 TDI	85 81 110 110 81 - 85 132 81 - 140	12/18→ 05/15→ 05/15→ 11/18→ 05/15→ 11/15→ 05/15→	⬅	+PR 1ZK / 1ZL		**13.0460-2785.2** **13.0470-2785.2**	**602785** **LD2785**	TRW 25683 20,4 + WE / + WK TRW 25683 20,4 + WE / + WK Ceramic
			➡	+ eFSB; +PR 2EG / 2EJ		**13.0460-7293.2** **13.0470-7293.2**	**607293** **LD7293**	ATE 25008 16,3 - WE / - WK ATE 25008 16,3 - WE / - WK Ceramic
			➡	+ eFSB; +PR 2EM		**13.0460-7294.2** **13.0470-7294.2**	**607294** **LD7294**	ATE 25009 16,4 - WE / - WK ATE 25009 16,4 - WE / - WK Ceramic
Warning Contact, brake pad wear								
1.0 TSI 1.2 TSI 1.4 TSI 1.5 TSI 1.6 TDI 1.8 TSI 2.0 TDI	85 81 110 110 81 - 85 132 81 - 140	12/18→ 05/15→ 05/15→ 11/18→ 05/15→ 11/15→ 05/15→	⬅	+PR 1ZA / 1ZD;	1	**24.8190-0065.2**	**620065**	
Brake Disc								
1.0 TSI 1.2 TSI 1.4 TSI 1.5 TSI 1.6 TDI 1.8 TSI 2.0 TDI	85 81 110 110 81 - 85 132 81 - 140	12/18→ 05/15→ 05/15→ 11/18→ 05/15→ 11/15→ 05/15→	⬅	+PR 1ZK / 1ZL		**24.0125-0158.1**	**425158**	Ø 312 Brake Disc Thickness [mm] 25 Minimum thickness [mm] 22 Vented + S
			➡	+PR 2EG / 2EJ		**24.0110-0356.1**	**410356**	Ø 272 Brake Disc Thickness [mm] 9.7 Minimum thickness [mm] 8 + S
			➡	+ eFSB; +PR 2EI / 2EM		**24.0112-0210.1**	**412210**	Ø 300 Brake Disc Thickness [mm] 12 Minimum thickness [mm] 10 + S
Sensor, wheel speed								
1.0 TSI 1.2 TSI 1.4 TSI 1.5 TSI 1.6 TDI 1.8 TSI 2.0 TDI	85 81 110 110 81 - 85 132 81 - 140	12/18→ 05/15→ 05/15→ 11/18→ 05/15→ 11/15→ 05/15→	⬅			**24.0711-5273.3**	**360303**	
			⬅			**24.0711-5274.3**	**360304**	
			➡		2	**24.0711-6337.3**	**360390**	
Slave Cylinder, clutch								
1.0 TSI 1.2 TSI 1.4 TSI 1.5 TSI 1.6 TDI 1.8 TSI 2.0 TDI	85 81 110 110 81 - 85 132 81 - 140	12/18→ 05/15→ 05/15→ 11/18→ 05/15→ 11/15→ 05/15→		+PR 0EC		**24.2519-1706.3**	**040096**	Ø 19
Control Element, parking brake caliper								
1.0 TSI 1.2 TSI 1.4 TSI 1.5 TSI 1.6 TDI 1.8 TSI 2.0 TDI	85 81 110 110 81 - 85 132 81 - 140	12/18→ 05/15→ 05/15→ 11/18→ 05/15→ 11/15→ 05/15→	➡			**11.9282-1001.3**	**250159**	ATE
			➡			**11.9282-1002.3**	**250160**	ATE

© 2022 Continental Aftermarket & Services GmbH

	kW				! #			
VW - TOURAN VAN (1T1, 1T2) 02/03→05/10								
Guide Bolt, brake caliper								
1.9 TDI	66 - 77	08/03→05/10		+PR 1ZE / 1ZP	2	**11.8171-0008.1**	**990049**	ATE
2.0 EcoFuel 2.0 FSI 2.0 TDi FSI	80 110 103 85	02/06→11/06 05/04→01/07 08/03→05/10 02/03→11/06		+PR 1LJ / 1ZA / 1ZD	2	**11.8171-0008.1**	**990049**	ATE
2.0 TDI	100	02/03→05/10		08/03→; +PR 1ZE / 1ZP	2	**11.8171-0008.1**	**990049**	ATE
				08/03→; +PR 1LJ / 1ZA / 1ZD	2	**11.8171-0008.1**	**990049**	ATE
Brake Disc								
1.9 TDI	66 - 77	08/03→05/10	←	+PR 1ZE / 1ZP		**24.0125-0145.1**	**425145**	Ø 288 Brake Disc Thickness [mm] 25 Minimum thickness [mm] 22 Vented + S
2.0 EcoFuel 2.0 FSI 2.0 TDi FSI	80 110 103 85	02/06→11/06 05/04→01/07 08/03→05/10 02/03→11/06	←	+PR 1LJ / 1ZA / 1ZD		**24.0125-0158.1** **24.0325-0158.1**	**425158** **525158**	Ø 312 Brake Disc Thickness [mm] 25 Minimum thickness [mm] 22 Vented + S Ø 312 Brake Disc Thickness [mm] 25 Minimum thickness [mm] 22 Vented + S
			→	+PR 1KS		**24.0110-0356.1**	**410356**	Ø 272 Brake Disc Thickness [mm] 9.7 Minimum thickness [mm] 8 + S
2.0 TDI	100	02/03→05/10	←	08/03→; +PR 1ZE / 1ZP		**24.0125-0145.1**	**425145**	Ø 288 Brake Disc Thickness [mm] 25 Minimum thickness [mm] 22 Vented + S
			←	08/03→; +PR 1LJ / 1ZA / 1ZD		**24.0125-0158.1** **24.0325-0158.1**	**425158** **525158**	Ø 312 Brake Disc Thickness [mm] 25 Minimum thickness [mm] 22 Vented + S Ø 312 Brake Disc Thickness [mm] 25 Minimum thickness [mm] 22 Vented + S
			→	08/03→; +PR 1KS		**24.0110-0356.1**	**410356**	Ø 272 Brake Disc Thickness [mm] 9.7 Minimum thickness [mm] 8 + S
Slave Cylinder, clutch								
1.9 TDI 2.0 TDi 2.0 TDI	66 103 100	11/04→05/10 08/03→05/10 02/03→05/10		11/09→; +PR 0EM		**24.2519-1706.3**	**040096**	Ø 19
1.9 TDI	77	08/03→11/06		+PR 0EM		**24.2519-1706.3**	**040096**	Ø 19
VW - TOURAN VAN (1T3) 05/10→05/15								
Guide Bolt, brake caliper								
1.2 TSI	77	05/10→05/15		+PR 1ZE / 1ZP	2	**11.8171-0008.1**	**990049**	ATE
1.4 TSI 1.4 TSi EcoFuel 1.6 TDI 2.0 TDi 2.0 TDI	103 - 125 110 66 - 77 125 103	05/10→05/15 05/10→05/15 05/10→05/15 05/10→01/13 05/10→05/15		+PR 1LJ / 1ZA / 1ZD	2	**11.8171-0008.1**	**990049**	ATE
Brake Disc								
1.2 TSI	77	05/10→05/15	←	+PR 1ZE / 1ZP		**24.0125-0145.1**	**425145**	Ø 288 Brake Disc Thickness [mm] 25 Minimum thickness [mm] 22 Vented + S
1.4 TSI 1.4 TSi EcoFuel 1.6 TDI 2.0 TDi 2.0 TDI	103 - 125 110 66 - 77 125 103	05/10→05/15 05/10→05/15 05/10→05/15 05/10→01/13 05/10→05/15	←	+PR 1LJ / 1ZA / 1ZD		**24.0125-0158.1** **24.0325-0158.1**	**425158** **525158**	Ø 312 Brake Disc Thickness [mm] 25 Minimum thickness [mm] 22 Vented + S Ø 312 Brake Disc Thickness [mm] 25 Minimum thickness [mm] 22 Vented + S
			→			**24.0110-0356.1**	**410356**	Ø 272 Brake Disc Thickness [mm] 9.7 Minimum thickness [mm] 8 + S

	kW				! #			
VW - TOURAN VAN (1T3) 05/10→05/15								
Slave Cylinder, clutch								
1.2 TSI 1.4 TSI 1.4 TSi EcoFuel 1.6 TDI 2.0 TDi 2.0 TDI	77 103 - 125 110 66 - 77 125 103	05/10→05/15 05/10→05/15 05/10→05/15 05/10→05/15 05/10→01/13 05/10→05/15		+PR 0EM		**24.2519-1706.3**	**040096**	Ø 19
VW - TOURAN VAN (5T1) 05/15→								
Brake Master Cylinder								
2.0 TDI	90 - 110	11/20→		for left-hand drive vehicles		**24.4123-1719.3**	**011017**	TRW Ø 23.8 without brake fluid reservoir
Brake Caliper								
2.0 TDI	90 - 110	11/20→	←	+PR 1ZA / 1ZD / 1ZK / 1ZL; ⊞		**24.3571-1801.5**	**241387**	without holder
			←	+PR 1ZA / 1ZD / 1ZK / 1ZL; ⊟		**24.3571-1802.5**	**241388**	without holder
			→	+PR 1KE / 1KR; ⊞		**24.6238-7023.5** **24.6238-7047.5**	**241241** **241181**	ATE without holder + eFSB ATE without holder + eFSB
			→	+PR 1KE / 1KR; ⊟		**24.6238-7024.5** **24.6238-7048.5**	**241242** **241182**	ATE without holder + eFSB ATE without holder + eFSB
			→	+PR 2EM; ⊞		**24.6242-7005.5**	**241337**	ATE + EMot / without holder + eFSB
			→	+PR 2EM; ⊟		**24.6242-7006.5**	**241338**	ATE + EMot / without holder + eFSB
Brake Pad Set, disc brake								
2.0 TDI	90 - 110	11/20→	←	+PR 1ZK / 1ZL		**13.0460-2785.2** **13.0470-2785.2**	**602785** **LD2785**	TRW 25683 20,4 + WE / + WK TRW 25683 20,4 + WE / + WK Ceramic
			→	+ eFSB; +PR 2EG / 2EJ		**13.0460-7293.2** **13.0470-7293.2**	**607293** **LD7293**	ATE 25008 16,3 - WE / - WK ATE 25008 16,3 - WE / - WK Ceramic
			→	+ eFSB; +PR 2EM		**13.0460-7294.2** **13.0470-7294.2**	**607294** **LD7294**	ATE 25009 16,4 - WE / - WK ATE 25009 16,4 - WE / - WK Ceramic
Warning Contact, brake pad wear								
2.0 TDI	90 - 110	11/20→	←	+PR 1ZA / 1ZD; ⊞	1	**24.8190-0065.2**	**620065**	
Brake Disc								
2.0 TDI	90 - 110	11/20→	←	+PR 1ZK / 1ZL		**24.0125-0158.1**	**425158**	Ø 312 Brake Disc Thickness [mm] 25 Minimum thickness [mm] 22 Vented + S
			→	+PR 2EG / 2EJ		**24.0110-0356.1**	**410356**	Ø 272 Brake Disc Thickness [mm] 9.7 Minimum thickness [mm] 8 + S
			→	+ eFSB; +PR 2EI / 2EM		**24.0112-0210.1**	**412210**	Ø 300 Brake Disc Thickness [mm] 12 Minimum thickness [mm] 10 + S
Sensor, wheel speed								
2.0 TDI	90 - 110	11/20→	←	⊞		**24.0711-5273.3**	**360303**	
			←	⊟		**24.0711-5274.3**	**360304**	
			→		2	**24.0711-6337.3**	**360390**	
Slave Cylinder, clutch								
2.0 TDI	90 - 110	11/20→		+PR 0EC		**24.2519-1706.3**	**040096**	Ø 19
Control Element, parking brake caliper								
2.0 TDI	90 - 110	11/20→	→	⊞		**11.9282-1001.3**	**250159**	ATE
			→	⊟		**11.9282-1002.3**	**250160**	ATE
VW - TRANSPORTER III Bus 05/79→07/92								
Guide Bolt, brake caliper								
1.6 TD	51	08/84→07/92	←	24-K-000001→	2	**11.8171-0008.1**	**990049**	ATE

© 2022 Continental Aftermarket & Services GmbH

	kW				! #			
VW - TRANSPORTER III Bus 05/79→07/92								
Guide Bolt, brake caliper								
1.7 D 1.9 2.1 2.1 Cat 2.1 i	42 44 - 66 64 - 82 70 68	10/86→07/92 08/82→07/92 08/84→07/92 06/89→07/92 07/89→07/92	←	24-K-000001→	2	**11.8171-0008.1**	**990049**	ATE
1.6 TD Syncro 1.9 Syncro 2.1 Syncro	51 57 64 - 82	03/86→07/92 02/85→07/92 08/85→07/92	←	24-J-105001→	2	**11.8171-0008.1**	**990049**	ATE
VW - TRANSPORTER III Platform/Chassis 05/79→12/92								
Guide Bolt, brake caliper								
1.6 TD 1.7 D 1.9 2.1 2.1 i	51 42 44 - 61 70 - 82 68	10/84→07/92 08/85→07/92 08/82→07/92 08/85→07/92 07/89→07/92	←	24-K-000001→	2	**11.8171-0008.1**	**990049**	ATE
1.6 TD Syncro 1.9 Syncro 2.1 Syncro	51 57 70 - 82	03/86→07/92 12/84→07/92 08/85→07/92	←	24-J-105001→	2	**11.8171-0008.1**	**990049**	ATE
VW - TRANSPORTER III Van 05/79→12/92								
Guide Bolt, brake caliper								
1.6 TD 1.7 D 1.9 2.1 2.1 i	51 42 44 - 66 70 - 82 68	10/84→07/92 08/84→07/92 10/82→07/92 08/85→07/92 07/89→07/92	←	24-K-000001→	2	**11.8171-0008.1**	**990049**	ATE
1.6 TD Syncro 1.9 Syncro 2.1 Syncro	51 57 70 - 82	03/86→07/92 11/84→07/92 08/85→07/92	←	24-J-105001→	2	**11.8171-0008.1**	**990049**	ATE
VW - TRANSPORTER IV Bus (70B, 70C, 7DB, 7DK, 70J, 70K, 7DC, 7DJ) 09/90→08/04								
Guide Bolt, brake caliper								
1.9 TD 2.0 2.4 D 2.5 2.5 TDI	50 62 57 81 75	10/92→04/03 09/90→04/03 09/90→04/98 09/90→06/03 09/95→04/03	←	05/96→; +PR 1LU	2	**11.8171-0008.1**	**990049**	ATE
			←	05/97→; → 70-1-000954; +PR 1LB	2	**11.8171-0008.1**	**990049**	ATE
2.4 D 2.5 TDI 2.8 VR6	55 65 - 111 150	08/97→04/03 05/98→04/03 04/00→04/03	←	→ 70-1-000954; +PR 1LB	2	**11.8171-0008.1**	**990049**	ATE
			←	+PR 1LU	2	**11.8171-0008.1**	**990049**	ATE
2.4 D Syncro 2.5 Syncro	57 81	10/92→09/98 08/92→04/03	←	07/95→; +PR 1LU	2	**11.8171-0008.1**	**990049**	ATE
2.5 2.8 VR 6	85 103	08/96→04/03 11/95→04/00	←	+PR 1LU	2	**11.8171-0008.1**	**990049**	ATE
			←	05/97→; → 70-1-000954; +PR 1LB	2	**11.8171-0008.1**	**990049**	ATE
2.5 Syncro 2.5 TDI Syncro	85 75	07/96→04/03 01/96→04/03	←	+PR 1LU	2	**11.8171-0008.1**	**990049**	ATE
VW - TRANSPORTER IV Platform/Chassis (70E, 70L, 70M, 7DE, 7DL, 7D 07/90→04/03								
Guide Bolt, brake caliper								
1.9 TD 2.0 2.4 D 2.5 2.5 TDI	50 62 57 81 75	10/92→04/03 07/90→04/03 09/90→04/98 11/90→04/03 09/95→04/03	←	05/96→; +PR 1LU	2	**11.8171-0008.1**	**990049**	ATE
			←	05/97→; → 70-1-000954; +PR 1LB	2	**11.8171-0008.1**	**990049**	ATE
2.4 D 2.5 TDI	55 65	08/97→04/03 05/98→04/03	←	→ 70-1-000954; +PR 1LB	2	**11.8171-0008.1**	**990049**	ATE
			←	+PR 1LU	2	**11.8171-0008.1**	**990049**	ATE
2.4 D Syncro 2.5 Syncro	57 81	10/92→09/98 11/92→11/01	←	07/95→; +PR 1LU	2	**11.8171-0008.1**	**990049**	ATE
2.5	85	08/96→04/03	←	+PR 1LU	2	**11.8171-0008.1**	**990049**	ATE
			←	05/97→; → 70-1-000954; +PR 1LB	2	**11.8171-0008.1**	**990049**	ATE
2.5 Syncro 2.5 TDI Syncro	85 75	08/96→04/03 05/98→04/03	←	+PR 1LU	2	**11.8171-0008.1**	**990049**	ATE

	kW				! #			
VW - TRANSPORTER IV Van (70A, 70H, 7DA, 7DH) 07/90→04/03								
Guide Bolt, brake caliper								
1.9 TD	50	10/92→04/03		05/96→; +PR 1LU	2	**11.8171-0008.1**	**990049**	ATE
2.0	62	07/90→04/03						
2.4 D	57	07/90→04/98		05/97→; → 70-1-000954; +PR 1LB	2	**11.8171-0008.1**	**990049**	ATE
2.5	81	11/90→04/03						
2.5 TDI	75	09/95→04/03						
2.4 D	55	08/97→04/03		→ 70-1-000954; +PR 1LB	2	**11.8171-0008.1**	**990049**	ATE
2.5 TDI	65 - 111	12/98→04/03		+PR 1LU	2	**11.8171-0008.1**	**990049**	ATE
2.8 VR6	150	06/00→04/03						
2.4 D Syncro	57	10/92→09/98		07/95→; +PR 1LU	2	**11.8171-0008.1**	**990049**	ATE
2.5	85	08/96→04/03		+PR 1LU	2	**11.8171-0008.1**	**990049**	ATE
2.8 VR6	103	05/96→05/00		05/97→; → 70-1-000954; +PR 1LB	2	**11.8171-0008.1**	**990049**	ATE
2.5 Syncro	81 - 85	01/96→04/03		+PR 1LU	2	**11.8171-0008.1**	**990049**	ATE
2.5 TDI Syncro	75	09/95→04/03						
VW - TRANSPORTER V Bus (7HB, 7HJ, 7EB, 7EJ) 04/03→08/15								
Guide Bolt, brake caliper								
1.9 TDI	62 - 77	04/03→11/09		+PR 0WR; → 7H-8-027999	2	**11.8171-0008.1**	**990049**	ATE
2.0	85	11/03→08/15						
2.0 CNG	85	01/06→08/15						
2.5 TDi	120	11/03→11/09						
2.5 TDI	96 - 128	04/03→11/09						
2.5 TDI 4motion	96 - 128	07/04→11/09						
3.2 V6	170 - 173	02/04→11/09						
3.2 V6 4motion	170 - 173	11/03→12/09		07/04→; +PR 0WR; → 7H-8-027999	2	**11.8171-0008.1**	**990049**	ATE
Accessory Kit, parking brake shoes								
1.9 TDI	62 - 77	04/03→11/09				**03.0137-9700.2**	**669700**	
2.0	85	11/03→08/15						
2.0 BiTDI	132	09/09→08/15						
2.0 BiTDI 4motion	132	09/09→08/15						
2.0 CNG	85	01/06→08/15						
2.0 TDI	62 - 103	09/09→08/15						
2.0 TDI 4motion	100 - 103	09/09→08/15						
2.5 TDi	120	11/03→11/09						
2.5 TDI	96 - 128	04/03→11/09						
2.5 TDI 4motion	96 - 128	07/04→11/09						
3.2 V6	170 - 173	02/04→11/09						
3.2 V6 4motion	170 - 173	11/03→12/09		07/04→		**03.0137-9700.2**	**669700**	
VW - TRANSPORTER V Platform/Chassis (7JD, 7JE, 7JL, 7JY, 7JZ, 7FD 04/03→08/15								
Guide Bolt, brake caliper								
1.9 TDI	62 - 77	04/03→11/09		→ 7J-8-000788; +PR 0WR / 0E0 / 0E9	2	**11.8171-0008.1**	**990049**	ATE
2.0	85	11/03→05/13						
2.0 CNG	85	11/03→05/11						
2.5 TDI	96 - 128	04/03→11/09						
2.5 TDI 4motion	96	07/04→11/09						
3.2 V6	170 - 173	08/03→11/09						
2.5 TDI 4motion	128	04/04→11/09		07/04→; → 7J-8-000788; +PR 0WR / 0E0 / 0E9	2	**11.8171-0008.1**	**990049**	ATE
3.2 4motion	170	11/03→11/09		07/04→; +PR 0WR; → 7H-8-027999	2	**11.8171-0008.1**	**990049**	ATE
Accessory Kit, parking brake shoes								
1.9 TDI	62 - 77	04/03→11/09		+PR 0WR / 0E0 / 0E9		**03.0137-9700.2**	**669700**	
2.0	85	11/03→05/13						
2.0 BiTDI	132	09/09→08/15						
2.0 BiTDI 4motion	132	09/09→08/15						
2.0 CNG	85	11/03→05/11						
2.0 TDI	62 - 103	09/09→08/15						
2.0 TDI 4motion	100 - 103	09/09→08/15						

© 2022 Continental Aftermarket & Services GmbH

	kW				! #			
VW - TRANSPORTER V Platform/Chassis (7JD, 7JE, 7JL, 7JY, 7JZ, 7FD 04/03→08/15								
Accessory Kit, parking brake shoes								
2.5 TDI	96 - 128	04/03→11/09		+PR 0WR / 0E0 / 0E9		**03.0137-9700.2**	**669700**	
2.5 TDI 4motion	96	07/04→11/09						
3.2 V6	170 - 173	08/03→11/09						
2.5 TDI 4motion	128	04/04→11/09		07/04→; +PR 0WR / 0E0 / 0E9		**03.0137-9700.2**	**669700**	
3.2 4motion	170	11/03→11/09		07/04→		**03.0137-9700.2**	**669700**	
VW - TRANSPORTER V Van (7HA, 7HH, 7EA, 7EH) 04/03→								
Guide Bolt, brake caliper								
1.9 TDI	62 - 77	04/03→11/09		+PR 0WR; → 7H-8-027999	2	**11.8171-0008.1**	**990049**	ATE
2.0	85	11/03→08/15						
2.0 BiFuel	85	05/11→08/15						
2.5 TDI	96 - 128	04/03→11/09						
2.5 TDI 4motion	96 - 128	07/04→11/09						
3.2 V6	170 - 173	04/03→11/09						
3.2 4motion	173	11/03→11/09		07/04→; +PR 0WR; → 7H-8-027999	2	**11.8171-0008.1**	**990049**	ATE
3.2 V6 4motion	170	04/03→06/05						
Accessory Kit, parking brake shoes								
1.9 TDI	62 - 77	04/03→11/09				**03.0137-9700.2**	**669700**	
2.0	85	11/03→08/15						
2.0 BiFuel	85	05/11→08/15						
2.0 BiTDI	132	09/09→08/15						
2.0 BiTDI 4motion	132	09/09→08/15						
2.0 TDI	62 - 103	09/09→08/15						
2.0 TDI 4motion	100 - 103	09/09→08/15						
2.5 TDI	96 - 128	04/03→11/09						
2.5 TDI 4motion	96 - 128	07/04→11/09						
3.2 V6	170 - 173	04/03→11/09						
3.2 4motion	173	11/03→11/09		07/04→		**03.0137-9700.2**	**669700**	
3.2 V6 4motion	170	04/03→06/05						
VW - T-ROC (A11) 07/17→								
Brake Caliper								
1.0 TSI	81	09/20→	←	+PR 1ZA / 1ZK / 1ZL;		**24.3571-1801.5**	**241387**	without holder
1.5 TSI	110	11/17→						
1.5 TSI 4motion	110	05/18→	←	+PR 1ZA / 1ZK / 1ZL;		**24.3571-1802.5**	**241388**	without holder
1.6 TDI	85	03/18→						
2.0 R 4motion	221	09/19→	→	+PR 1KE;		**24.6238-7023.5**	**241241**	ATE without holder + eFSB
2.0 TDI	110	03/18→				**24.6238-7047.5**	**241181**	ATE without holder + eFSB
2.0 TDI 4motion	110 - 140	09/17→	→	+PR 1KE;		**24.6238-7024.5**	**241242**	ATE without holder + eFSB
2.0 TDI SCR	85	11/20→				**24.6238-7048.5**	**241182**	ATE without holder + eFSB
1.0 TSI	85	07/17→	←	+PR 1ZA / 1ZK / 1ZL;		**24.3571-1801.5**	**241387**	without holder
2.0 TSI 4motion	140	07/17→						
			←	+PR 1ZA / 1ZK / 1ZL;		**24.3571-1802.5**	**241388**	without holder
			→	09/17→; +PR 1KE;		**24.6238-7023.5**	**241241**	ATE without holder + eFSB
			→	09/17→; +PR 1KE;		**24.6238-7024.5**	**241242**	ATE without holder + eFSB
						24.6238-7048.5	**241182**	ATE without holder + eFSB
			→	+PR 1KE;		**24.6238-7047.5**	**241181**	ATE without holder + eFSB
Brake Pad Set, disc brake								
1.0 TSI	81 - 85	07/17→	←	+PR 1LQ		**13.0460-2617.2**	**602617**	TRW + WK
						13.0470-2617.2	**LD2617**	TRW + WK Ceramic
1.5 TSI	110	11/17→						
1.5 TSI 4motion	110	05/18→	←	+PR 1ZA / 1ZB / 1ZE / 1ZJ / 1ZQ / 1ZK / 1ZL / 1ZU		**13.0460-2785.2**	**602785**	TRW 25683 20,4 + WE / + WK
1.6 TDI	85	03/18→				**13.0470-2785.2**	**LD2785**	TRW 25683 20,4 + WE / + WK Ceramic
2.0 R 4motion	221	09/19→						
2.0 TDI	110	03/18→						
2.0 TDI 4motion	110 - 140	09/17→	←	+PR 1ZJ / 9U0		**13.0470-2609.2**	**LD2609**	TRW + WE / - WK Ceramic
			→	+PR 1KE / 2EC / 2EG / 2EJ / 2EL		**13.0460-7293.2**	**607293**	ATE 25008 16,3 - WE / - WK
2.0 TDI SCR	85	11/20→				**13.0470-7293.2**	**LD7293**	ATE 25008 16,3 - WE / - WK Ceramic
2.0 TSI 4motion	140	07/17→						
Warning Contact, brake pad wear								
1.0 TSI	81 - 85	07/17→	←		1	**24.8190-0065.2**	**620065**	

	kW				! #			
VW - T-ROC (A11) 07/17→								
Warning Contact, brake pad wear								
1.5 TSI 1.5 TSI 4motion 1.6 TDI 2.0 R 4motion 2.0 TDI 2.0 TDI 4motion 2.0 TDI SCR 2.0 TSI 4motion	110 110 85 221 110 110 - 140 85 140	11/17→ 05/18→ 03/18→ 09/19→ 03/18→ 09/17→ 11/20→ 07/17→	←		1	**24.8190-0065.2**	**620065**	
Brake Disc								
1.0 TSI 1.5 TSI 1.5 TSI 4motion 1.6 TDI 2.0 R 4motion 2.0 TDI 2.0 TDI 4motion 2.0 TDI SCR 2.0 TSI 4motion	81 - 85 110 110 85 221 110 110 - 140 85 140	07/17→ 11/17→ 05/18→ 03/18→ 09/19→ 03/18→ 09/17→ 11/20→ 07/17→	←	+PR 1ZE / 1ZJ / 1ZQ		**24.0125-0145.1**	**425145**	Ø 288 Brake Disc Thickness [mm] 25 Minimum thickness [mm] 22 Vented + S
			←	+PR 1ZA / 1ZB / 1ZK / 1ZL / 1ZU		**24.0125-0158.1**	**425158**	Ø 312 Brake Disc Thickness [mm] 25 Minimum thickness [mm] 22 Vented + S
			→	+PR 1KE / 2EC / 2EG / 2EJ / 2EL / 0N4		**24.0110-0356.1**	**410356**	Ø 272 Brake Disc Thickness [mm] 9.7 Minimum thickness [mm] 8 + S
			→	+PR 1KE / 2EC / 2EG / 2EJ / 2EL / 0N1		**24.0110-0409.1**	**410409**	Ø 272 Brake Disc Thickness [mm] 10 Minimum thickness [mm] 8 + S
			→	+PR 2EF		**24.0122-0219.1**	**422219**	Ø 310 Brake Disc Thickness [mm] 22 Minimum thickness [mm] 20 Vented
Sensor, wheel speed								
1.0 TSI 2.0 TDI SCR	81 85	09/20→ 11/20→	←			**24.0711-5273.3**	**360303**	
			←			**24.0711-5274.3**	**360304**	
			→	+PR 0N4	2	**24.0711-5402.3**	**360331**	
1.0 TSI 1.5 TSI 1.6 TDI 2.0 TDI	85 110 85 110	07/17→ 11/17→ 03/18→ 03/18→	←			**24.0711-5273.3**	**360303**	
			←			**24.0711-5274.3**	**360304**	
			→	+PR 0N4; 11/19→	2	**24.0711-5402.3**	**360331**	
			→	+PR 0N4	2	**24.0711-6337.3**	**360390**	
1.5 TSI 4motion 2.0 R 4motion 2.0 TDI 4motion 2.0 TSI 4motion	110 221 110 - 140 140	05/18→ 09/19→ 09/17→ 07/17→	←			**24.0711-5273.3**	**360303**	
			←			**24.0711-5274.3**	**360304**	
			→	+PR 0N4;		**24.0711-5401.3**	**360330**	
			→	+PR 0N4; 12/19→;		**24.0711-5401.3**	**360330**	
			→	+PR 0N4; 12/19→;		**24.0711-5402.3**	**360331**	
			→	+PR 0N4;		**24.0711-5402.3**	**360331**	
Control Element, parking brake caliper								
1.0 TSI 1.5 TSI 1.5 TSI 4motion 1.6 TDI 2.0 R 4motion 2.0 TDI 2.0 TDI 4motion 2.0 TDI SCR 2.0 TSI 4motion	81 - 85 110 110 85 221 110 110 - 140 85 140	07/17→ 11/17→ 05/18→ 03/18→ 09/19→ 03/18→ 09/17→ 11/20→ 07/17→	→	+PR 1KE / 2EC / 2EG / 2EJ / 2EL;		**11.9282-1001.3**	**250159**	ATE
			→	+PR 1KE / 2EC / 2EG / 2EJ / 2EL;		**11.9282-1002.3**	**250160**	ATE
VW - T-ROC Convertible (AC7) 12/19→								
Brake Caliper								
1.0 TSI 1.5 TSI	81 - 85 110	12/19→ 12/19→	←	+PR 1ZK;		**24.3571-1801.5**	**241387**	without holder
			←	+PR 1ZK;		**24.3571-1802.5**	**241388**	without holder
Brake Pad Set, disc brake								
1.0 TSI 1.5 TSI	81 - 85 110	12/19→ 12/19→	←	+PR 1ZJ / 1ZK		**13.0460-2785.2** **13.0470-2785.2**	**602785** **LD2785**	TRW 25683 20,4 + WE / + WK TRW 25683 20,4 + WE / + WK Ceramic
			→	+PR 2EJ; + eFSB		**13.0460-7293.2** **13.0470-7293.2**	**607293** **LD7293**	ATE 25008 16,3 - WE / - WK ATE 25008 16,3 - WE / - WK Ceramic

© 2022 Continental Aftermarket & Services GmbH

	kW				! #			
VW - T-ROC Convertible (AC7) 12/19→								
Warning Contact, brake pad wear								
1.0 TSI 1.5 TSI	81 - 85 110	12/19→ 12/19→	←		1	**24.8190-0065.2**	**620065**	
Brake Disc								
1.0 TSI 1.5 TSI	81 - 85 110	12/19→ 12/19→	←	+PR 1ZJ		**24.0125-0145.1**	**425145**	Ø 288 Brake Disc Thickness [mm] 25 Minimum thickness [mm] 22 Vented + S
			←	+PR 1ZK		**24.0125-0158.1**	**425158**	Ø 312 Brake Disc Thickness [mm] 25 Minimum thickness [mm] 22 Vented + S
			→	+PR 2EJ; + eFSB		**24.0110-0356.1**	**410356**	Ø 272 Brake Disc Thickness [mm] 9.7 Minimum thickness [mm] 8 + S
Sensor, wheel speed								
1.0 TSI 1.5 TSI	81 - 85 110	12/19→ 12/19→	←			**24.0711-5273.3**	**360303**	
			←			**24.0711-5274.3**	**360304**	
			→		2	**24.0711-6337.3**	**360390**	
Control Element, parking brake caliper								
1.0 TSI 1.5 TSI	81 - 85 110	12/19→ 12/19→	→			**11.9282-1001.3**	**250159**	ATE
			→			**11.9282-1002.3**	**250160**	ATE
VW - UP! (121, 122, BL1, BL2, BL3, 123) 08/11→								
Guide Bolt, brake caliper								
1.0	44 - 55	08/11→08/20		12/11→; +PR 1LA / 1ZQ	2	**11.8171-0008.1**	**990049**	ATE
1.0 1.0 EcoFuel 1.0 GTI 1.0 TSI	48 50 85 66	08/20→ 11/12→ 11/17→ 05/16→09/18		+PR 1LA / 1ZQ	2	**11.8171-0008.1**	**990049**	ATE
e-Up	60 - 61	07/13→		09/13→; +PR 1LA / 1ZQ	2	**11.8171-0008.1**	**990049**	ATE
Brake Pad Set, disc brake								
1.0 1.0 EcoFuel e-Up	44 - 55 50 60 - 61	08/11→08/20 11/12→ 07/13→	←	+PR 1ZE; 05/16→		**13.0460-2785.2** **13.0470-2609.2** **13.0470-2785.2**	**602785** **LD2609** **LD2785**	TRW 25683 20,4 + WE / + WK TRW + WE / - WK Ceramic TRW 25683 20,4 + WE / + WK Ceramic
1.0 1.0 GTI 1.0 TSI	48 85 66	08/20→ 11/17→ 05/16→09/18	←	+PR 1ZE		**13.0460-2785.2** **13.0470-2609.2** **13.0470-2785.2**	**602785** **LD2609** **LD2785**	TRW 25683 20,4 + WE / + WK TRW + WE / - WK Ceramic TRW 25683 20,4 + WE / + WK Ceramic
Sensor, wheel speed								
1.0	44 - 55	08/11→08/20	←	12/11→;		**24.0711-5273.3**	**360303**	
			←	12/11→;		**24.0711-5274.3**	**360304**	
1.0 1.0 EcoFuel 1.0 GTI 1.0 TSI	48 50 85 66	08/20→ 11/12→ 11/17→ 05/16→09/18	←			**24.0711-5273.3**	**360303**	
			←			**24.0711-5274.3**	**360304**	
e-Up	60 - 61	07/13→	←	09/13→;		**24.0711-5273.3**	**360303**	
			←	09/13→;		**24.0711-5274.3**	**360304**	
VW - VENTO (1H2) 11/91→09/98								
Guide Bolt, brake caliper								
2.0	85	11/91→09/98	←	05/96→	2	**11.8171-0008.1**	**990049**	ATE
2.0 GL	79	05/96→12/97	←		2	**11.8171-0008.1**	**990049**	ATE
2.8 VR6	128	01/92→09/98	←	1H-S-560001→	2	**11.8171-0008.1**	**990049**	ATE

EN Technical translations

DE Technische Übersetzungen

ES Traducciones tecnicas

FR Traductions techniques

IT Traduzioni tecniche

12/2021

© 2022 Continental Aftermarket & Services GmbH

Technical translations

Technische Übersetzungen - Traducciones tecnicas - Traductions techniques - Traduzioni tecniche

EN	
	Brake Master Cylinder
	Slave Cylinder, clutch
	Brake Hose
	Cable Pull, parking brake
	Brake Shoe Set, parking brake
	Brake Caliper
	Brake Pad Set, disc brake
	Brake Disc
	Wheel Brake Cylinder
	Sensor, wheel speed
	Brake Shoe Set
	Rear Axle Left
	Rear Axle Right
	Left Rear
	Right Rear
	Front Axle Left
	Front Axle Right
→ for DAM number up to	for DAM number up to
+ ABS	for vehicles with ABS
+ AUT	with automatic adjustment
+ eFSB	Brake caliper with adjusting element for electr. handbrake for vehicles with electric parking brake

EN	
+ EMot	with electric motor
+ ESP	for vehicles with ESP
+ EU	Europe
+ FSB	Brake Caliper with integrated parking brake
+ HEB	with lever
+ H mm	Overall Height [mm]
+ Perform-ance Parts	for vehicles with Performance brakes
+POC	for POC
+PR	for PR number
+ RUS	Russia
+ RZ	with wheel brake cylinder
+ S	with bolts/screws
+ TR	Turkey
+ WE	prepared for wear indicator
+ WK	incl. wear warning contact with acoustic wear warning
+ Zub	with accessories
14"	14"
15"	15"
16"	16"
17"	17"
18"	18"
19"	19"
20"	20"
4-Speed Automatic Transmission	4-Speed Automatic Transmission
6-Speed Manual Transmission	6-Speed Manual Transmission
- ABS	for vehicles without ABS
adjusting nut	additional article information, adjusting nut
ADV	Brake System, Advics
AKE	Brake System, Akebono
ALU	Aluminium
AP	Brake System, AP Lockheed

© 2022 Continental Aftermarket & Services GmbH

Technical translations

Technische Übersetzungen - Traducciones tecnicas - Traductions techniques - Traduzioni tecniche

EN	
ATE Ceramic	additional article information, ATE Ceramic
Automatic Transmission	Automatic Transmission
B	Coated
B1=	Width 1 [mm]
B2=	Width 2 [mm]
BDX	Brake System, Bendix
Black	Black
Bolt Hole Circle Ø [mm]	Bolt Hole Circle Ø [mm]
Bore Ø [mm]	Bore Ø [mm]
BOS	Brake System, Bosch
Brake Caliper Colour	Brake Caliper Colour
Brake Disc Thickness [mm]	Brake Disc Thickness [mm]
Brake Size	Brake Size
BRE	Brake System, Brembo
Cast Aluminium	Cast Aluminium
CB compatible package	CB compatible package
Centering Diameter [mm]	Centering Diameter [mm]
Codes of set object definitions	Codes of set object definitions
Country specific package and status data	Country specific package and status data
Czech Republic	Czech Republic
Disc Brake	Disc Brake
- eFSB	for vehicles without electric parking brake
Electric	Electric
Engine Code	Engine Code
- ESP	for vehicles without ESP

EN	
Flange Hole Diameter [mm]	Flange Hole Diameter [mm]
for article number	for article number
for brake disc diameter [mm]	for brake disc diameter [mm]
for brake disc thickness [mm]	for brake disc thickness [mm]
for cruise control system	for cruise control system
for dual tyres	for dual tyres
for extended wheelbase	for extended wheelbase
for facelift	for facelift
for government vehicles	for government vehicles
for increased payload	for increased payload
for individual equipment ID	for individual equipment ID
for left-hand drive vehicles	for left-hand drive vehicles
for police vehicles	for police vehicles
for right-hand drive vehicles	for right-hand drive vehicles
for shortened wheelbase	for shortened wheelbase
for taxis	for taxis
for vehicles with 3rd seating row	for vehicles with 3rd seating row
for vehicles with active steering	for vehicles with active steering
for vehicles with aerodynamic pack	for vehicles with aerodynamic pack

© 2022 Continental Aftermarket & Services GmbH

Technical translations

Technische Übersetzungen - Traducciones tecnicas - Traductions techniques - Traduzioni tecniche

EN	
for vehicles with air conditioning	for vehicles with air conditioning
for vehicles with AMG Sports Package	for vehicles with AMG Sports Package
for vehicles with autom. distance control	for vehicles with autom. distance control
for vehicles with disc brakes on the rear axle	for vehicles with disc brakes on the rear axle
for vehicles with drum brakes on the rear axle	for vehicles with drum brakes on the rear axle
for vehicles with heavy duty suspen-sion	for vehicles with heavy duty suspension
for vehicles with height-adjustable suspension	for vehicles with height-adjustable suspension
for vehicles with M-sport brakes	for vehicles with M-sport brakes
for vehicles with M-tech-nology	for vehicles with M-technology
for vehicles without 3rd seating row	for vehicles without 3rd seating row
for vehicles without aero-dynamic pack	for vehicles without aerodynamic pack
for vehicles without AMG sports package	for vehicles without AMG sports package
for vehicles without ceramic brakes	for vehicles without ceramic brakes

EN	
for vehicles without four wheel steering	for vehicles without four wheel steering
for vehicles without heavy duty suspension	for vehicles without heavy duty suspen-sion
for vehicles without M-sport brakes	for vehicles without M-sport brakes
for vehicles without M-technology	for vehicles without M-technology
for vehicles without sports brake system	for vehicles without sports brake system
for vehicles without sports package	for vehicles without sports package
for vehicles without sports suspension	for vehicles without sports suspension
for vehicles without start-stop function	for vehicles without start-stop function
for vehicles without tech-nology package	for vehicles without technology package
for vehicles without towbar	for vehicles without towbar
for vehicles with parking assistant system	for vehicles with parking assistant system
for vehicles with rein-forced brakes	for vehicles with reinforced brakes
for vehicles with single rear axle	for vehicles with single rear axle
for vehicles with sports brake system	for vehicles with sports brake system

© 2022 Continental Aftermarket & Services GmbH

Technical translations

Technische Übersetzungen - Traducciones tecnicas - Traductions techniques - Traduzioni tecniche

EN	
for vehicles with sports package	for vehicles with sports package
for vehicles with sports suspension	for vehicles with sports suspension
for vehicles with start-stop function	for vehicles with start-stop function
for vehicles with technology package	for vehicles with technology package
for vehicles with towbar	for vehicles with towbar
France	France
GG	Cast iron brake caliper Grey Cast Iron
Grey	Grey
HC	High-carbon
HC L	Alloyed / High-carbon
- HEB	without lever
Height [mm]	Height [mm]
Height 1 [mm]	Height 1 [mm]
Height 2 [mm]	Height 2 [mm]
Hub Diameter [mm]	Hub Diameter [mm]
Inner Br. Drum Diam. [in]	Inner Br. Drum Diam. [in]
Japan	Japan
L=	Length [mm]
L=	Overall Length [mm] Cable Length [mm] Warning Contact Length [mm]
L1=	Length 1 [mm]
L2=	Length 2 [mm]
Machining	Machining
MAN	Brake System, Mando
Manual Transmission	Manual Transmission

EN	
Minimum thickness [mm]	Minimum thickness [mm]
not for equipment variant	not for equipment variant
not for government vehicles	not for government vehicles
not for increased payload	not for increased payload
not for motor home	not for motor home
not for police vehicles	not for police vehicles
not for rim size [in]	not for rim size [in]
not for special-purpose vehicles	not for special-purpose vehicles
not for taxis	not for taxis
not for vehicles with reinforced brakes	not for vehicles with reinforced brakes
Number of Doors	Number of Doors
Number of Holes	Number of Holes
Observe dimensions	Observe dimensions
Orga →	for organisation number from
Outer	Outer
Part number of recommended accessories	Part number of recommended accessories
Payload [kg]	Payload [kg]
Payload from [kg]	Payload from [kg]
Payload to [kg]	Payload to [kg]
- Performance Parts	for vehicles without Performance brakes

© 2022 Continental Aftermarket & Services GmbH

Technical translations

Technische Übersetzungen - Traducciones tecnicas - Traductions techniques - Traduzioni tecniche

EN	
Piston Diameter [mm]	Piston Diameter [mm]
Plastic	Plastic
Plug Type ID	Plug Type ID
PowerDisc	additional article information, PowerDisc
-PR	not for PR number
Pre-assembled	Pre-assembled
Red	Red
replacement part	replacement part
Rigid Axle	Rigid Axle
Rim Hole Number	Rim Hole Number
Rim Size [in]	Rim Size [in]
Service exchange part	Service exchange part
Silver	Silver
Slovakia	Slovakia
Spanner size 1 [mm]	Spanner size 1 [mm]
Spanner size 2 [mm]	Spanner size 2 [mm]
SUM	Brake System, Sumitomo
Surface	Surface
Thickness [mm]	Thickness [mm]
Thickness 1 [mm]	Thickness 1 [mm]
Thickness 2 [mm]	Thickness 2 [mm]
TopKit original ATE	additional article information, Original ATE TopKit
Transmission Type	Transmission Type
TRW	Brake System, Lucas / TRW
Type	Type
Ultra Marine Blue	Ultra Marine Blue
usage number	usage number

EN	
Vehicle Production Country	Vehicle Production Country
- WE	not prepared for wear indicator
Wheelbase [mm]	Wheelbase [mm]
Width [mm]	Width [mm]
with anti-squeak plate	with anti-squeak plate
with brake caliper screws	with brake caliper screws
with hollow screw	with hollow screw
without brake fluid reservoir	without brake fluid reservoir
without brake pads	without brake pads
without cable	without cable
with seal	with seal
- WK	excl. wear warning contact
x	Number of wear indicators [per axle] Number of connectors
Yes	Yes
Ø	Diameter [mm] Inner diameter [mm] Outer diameter [mm] Inner Br. Drum Diam. [mm]
Ø1	Diameter 1 [mm]
Ø2	Diameter 2 [mm]
→	Construction year from Vehicle Identification Number from
→	Construction year to Vehicle Identification Number to
→**Orga**	for organisation number up to

© 2022 Continental Aftermarket & Services GmbH

Technical translations

Technische Übersetzungen - Traducciones tecnicas - Traductions techniques - Traduzioni tecniche

DE	
	Hauptbremszylinder
	Nehmerzylinder, Kupplung
	Bremsschlauch
	Seilzug, Feststellbremse
	Bremsbackensatz, Feststellbremse
	Bremssattel
	Bremsbelagsatz, Scheibenbremse
	Bremsscheibe
	Radbremszylinder
	Sensor, Raddrehzahl
	Bremsbackensatz
	Hinterachse links
	Hinterachse rechts
	hinten links
	hinten rechts
	Vorderachse links
	Vorderachse rechts
→ for DAM number up to	für DAM-Nummer bis
+ ABS	für Fahrzeuge mit ABS
+ AUT	mit automatischer Nachstellung

DE	
+ eFSB	Bremssattel mit Stellelement für elektr. Feststellbremse für Fahrzeuge mit elektrischer Feststell-bremse
+ EMot	mit Elektromotor
+ ESP	für Fahrzeuge mit ESP
+ EU	Europa
+ FSB	Bremssattel m. integr. Feststellbremse
+ HEB	mit Hebel
+ H mm	Bauhöhe [mm]
+ Perform-ance Parts	für Fahrzeuge mit Performance Bremse
+POC	für POC
+PR	für PR-Nummer
+ RUS	Russland
+ RZ	mit Radbremszylinder
+ S	mit Schrauben
+ TR	Türkei
+ WE	für Verschleißwarnanzeiger vorbereitet
+ WK	inkl. Verschleißwarnkontakt mit akustischer Verschleißwarnung
+ Zub	mit Zubehör
14"	14"
15"	15"
16"	16"
17"	17"
18"	18"
19"	19"
20"	20"
4-Speed Automatic Transmission	Getriebeautomatik 4 Gang
6-Speed Manual Transmission	Schaltgetriebe 6 Gang
- ABS	für Fahrzeuge ohne ABS
adjusting nut	Artikelzusatzbezeichnung, Nachstell-mutter
ADV	Bremssystem, Advics
AKE	Bremssystem, Akebono
ALU	Aluminium

© 2022 Continental Aftermarket & Services GmbH

Technical translations

Technische Übersetzungen - Traducciones tecnicas - Traductions techniques - Traduzioni tecniche

DE	
AP	Bremssystem, AP Lockheed
ATE Ceramic	Artikelzusatzbezeichnung, ATE Ceramic
Automatic Transmission	Automatikgetriebe
B	beschichtet
B1=	Breite 1 [mm]
B2=	Breite 2 [mm]
BDX	Bremssystem, Bendix
Black	schwarz
Bolt Hole Circle Ø [mm]	Lochkreis-Ø [mm]
Bore Ø [mm]	Bohrung-Ø [mm]
BOS	Bremssystem, Bosch
Brake Caliper Colour	Bremssattelfarbe
Brake Disc Thickness [mm]	Bremsscheibendicke [mm]
Brake Size	Bremsengröße
BRE	Bremssystem, Brembo
Cast Aluminium	Aluguss
CB compatible package	SB gerechte Verpackung
Centering Diameter [mm]	Zentrierungsdurchmesser [mm]
Codes of set object definitions	Codes der gesetzten Objektdefinitionen
Country specific package and status data	Länderspezifische Verpackungs- und Status-Informationen
Czech Republic	Tschechische Republik
Disc Brake	Scheibenbremse
- eFSB	für Fahrzeuge ohne elektrische Feststellbremse
Electric	elektrisch
Engine Code	Motorcode

DE	
- ESP	für Fahrzeuge ohne ESP
Flange Hole Diameter [mm]	Flanschlochdurchmesser [mm]
for article number	für Artikelnummer
for brake disc diameter [mm]	für Bremsscheibendurchmesser [mm]
for brake disc thickness [mm]	für Bremsscheibendicke [mm]
for cruise control system	für Geschwindigkeitsregelanlage
for dual tyres	für Doppelbereifung
for extended wheelbase	für verlängerten Radstand
for facelift	für Facelift
for government vehicles	für Behördenfahrzeuge
for increased payload	für erhöhte Nutzlast
for individual equipment ID	für Individualausstattungs-ID
for left-hand drive vehicles	für Linkslenker
for police vehicles	für Polizeifahrzeuge
for right-hand drive vehicles	für Rechtslenker
for shortened wheelbase	für verkürzten Radstand
for taxis	für Taxifahrzeuge
for vehicles with 3rd seating row	für Fahrzeuge mit 3. Sitzreihe
for vehicles with active steering	für Fahrzeuge mit Aktivlenkung
for vehicles with aerodynamic pack	für Fahrzeuge mit Aerodynamikpaket

© 2022 Continental Aftermarket & Services GmbH

Technical translations

Technische Übersetzungen - Traducciones tecnicas - Traductions techniques - Traduzioni tecniche

DE	
for vehicles with air conditioning	für Fahrzeuge mit Klimaanlage
for vehicles with AMG Sports Package	für Fahrzeuge mit AMG-Sportpaket
for vehicles with autom. distance control	für Fahrzeuge mit autom. Distanzregelung
for vehicles with disc brakes on the rear axle	für Fahrzeuge mit Scheibenbremse an der Hinterachse
for vehicles with drum brakes on the rear axle	für Fahrzeuge mit Trommelbremse an der Hinterachse
for vehicles with heavy duty suspension	für Fahrzeuge mit verstärktem Fahrwerk
for vehicles with height-adjustable suspension	für Fahrzeuge mit höhenverstellbarem Fahrwerk
for vehicles with M-sport brakes	für Fahrzeuge mit M-Sportbremse
for vehicles with M-technology	für Fahrzeuge mit M-Technik
for vehicles without 3rd seating row	für Fahrzeuge ohne 3. Sitzreihe
for vehicles without aerodynamic pack	für Fahrzeuge ohne Aerodynamikpaket
for vehicles without AMG sports package	für Fahrzeuge ohne AMG-Sportpaket
for vehicles without ceramic brakes	für Fahrzeuge ohne Keramikbremse

DE	
for vehicles without four wheel steering	für Fahrzeuge ohne Vierradlenkung
for vehicles without heavy duty suspension	für Fahrzeuge ohne verstärktes Fahrwerk
for vehicles without M-sport brakes	für Fahrzeuge ohne M-Sportbremse
for vehicles without M-technology	für Fahrzeuge ohne M-Technik
for vehicles without sports brake system	für Fahrzeuge ohne Sportbremsanlage
for vehicles without sports package	für Fahrzeuge ohne Sportpaket
for vehicles without sports suspension	für Fahrzeuge ohne Sportfahrwerk
for vehicles without start-stop function	für Fahrzeuge ohne Start-Stopp-Funktion
for vehicles without technology package	für Fahrzeuge ohne Technik-Paket
for vehicles without towbar	für Fahrzeuge ohne Anhängevorrichtung
for vehicles with parking assistant system	für Fahrzeuge mit Parkassistenzsystem
for vehicles with reinforced brakes	für Fahrzeuge mit verstärkter Bremse
for vehicles with single rear axle	für Fahrzeuge mit Einfachbereifung hinten
for vehicles with sports brake system	für Fahrzeuge mit Sportbremsanlage

© 2022 Continental Aftermarket & Services GmbH

Technical translations

Technische Übersetzungen - Traducciones tecnicas - Traductions techniques - Traduzioni tecniche

DE	
for vehicles with sports package	für Fahrzeuge mit Sportpaket
for vehicles with sports suspension	für Fahrzeuge mit Sportfahrwerk
for vehicles with start-stop function	für Fahrzeuge mit Start-Stopp-Funktion
for vehicles with technology package	für Fahrzeuge mit Technik-Paket
for vehicles with towbar	für Fahrzeuge mit Anhängevorrichtung
France	Frankreich
GG	Bremssattel aus Gusseisen Grauguss
Grey	grau
HC	hochgekohlt
HC L	legiert/hochgekohlt
- HEB	ohne Hebel
Height [mm]	Höhe [mm]
Height 1 [mm]	Höhe 1 [mm]
Height 2 [mm]	Höhe 2 [mm]
Hub Diameter [mm]	Nabendurchmesser [mm]
Inner Br. Drum Diam. [in]	Br.trommeldurchm.innen [Zoll]
Japan	Japan
L=	Länge [mm]
L=	Länge über Alles [mm] Kabellänge [mm] Warnkontaktlänge [mm]
L1=	Länge 1 [mm]
L2=	Länge 2 [mm]
Machining	Bearbeitung
MAN	Bremssystem, Mando
Manual Transmission	Schaltgetriebe

DE	
Minimum thickness [mm]	Mindestdicke [mm]
not for equipment variant	nicht für Ausstattungsvariante
not for government vehicles	nicht für Behördenfahrzeuge
not for increased payload	nicht für erhöhte Nutzlast
not for motor home	nicht für Wohnmobile
not for police vehicles	nicht für Polizeifahrzeuge
not for rim size [in]	nicht für Felgengröße [Zoll]
not for special-purpose vehicles	nicht für Sonderfahrzeuge
not for taxis	nicht für Taxifahrzeuge
not for vehicles with reinforced brakes	nicht für Fahrzeuge mit verstärkter Bremse
Number of Doors	Türenanzahl
Number of Holes	Lochanzahl
Observe dimensions	Abmessungen beachten
Orga →	für Organisationsnummer ab
Outer	außen
Part number of recommended accessories	Artikelnummer des empfohlenen Zubehörs
Payload [kg]	Nutzlast [kg]
Payload from [kg]	Nutzlast ab [kg]
Payload to [kg]	Nutzlast bis [kg]
- Performance Parts	für Fahrzeuge ohne Performance Bremse

© 2022 Continental Aftermarket & Services GmbH

Technical translations

Technische Übersetzungen - Traducciones tecnicas - Traductions techniques - Traduzioni tecniche

DE	
Piston Diameter [mm]	Kolbendurchmesser [mm]
Plastic	Kunststoff
Plug Type ID	Steckerausführung-ID
PowerDisc	Artikelzusatzbezeichnung, PowerDisc
-PR	nicht für PR-Nummer
Pre-assembled	vormontiert
Red	rot
replacement part	Austauschteil
Rigid Axle	Starrachse
Rim Hole Number	Felge Lochzahl
Rim Size [in]	Felgengröße [Zoll]
Service exchange part	Austauschteil
Silver	silber
Slovakia	Slowakische Republik
Spanner size 1 [mm]	Schlüsselweite 1 [mm]
Spanner size 2 [mm]	Schlüsselweite 2 [mm]
SUM	Bremssystem, Sumitomo
Surface	Oberfläche
Thickness [mm]	Dicke/Stärke [mm]
Thickness 1 [mm]	Dicke/Stärke 1 [mm]
Thickness 2 [mm]	Dicke/Stärke 2 [mm]
TopKit original ATE	Artikelzusatzbezeichnung, Original ATE TopKit
Transmission Type	Getriebetyp
TRW	Bremssystem, Lucas / TRW
Type	Baumuster
Ultra Marine Blue	ultramarineblau
usage number	Gebrauchsnummer

DE	
Vehicle Production Country	Fahrzeugproduktionsland
- WE	nicht für Verschleißwarnanzeiger vorbereitet
Wheelbase [mm]	Radstand [mm]
Width [mm]	Breite [mm]
with anti-squeak plate	mit Anti-Quietsch-Blech
with brake caliper screws	mit Bremssattelschrauben
with hollow screw	mit Hohlschraube
without brake fluid reservoir	ohne Bremsflüssigkeitsbehälter
without brake pads	ohne Bremsbeläge
without cable	ohne Kabel
with seal	mit Dichtung
- WK	exkl. Verschleißwarnkontakt
x	Anzahl Verschleißanzeiger [pro Achse] Anschlussanzahl
Yes	Ja
Ø	Durchmesser [mm] Innendurchmesser [mm] Außendurchmesser [mm] Br.trommeldurchm.innen [mm]
Ø1	Durchmesser 1 [mm]
Ø2	Durchmesser 2 [mm]
→	Baujahr ab Fahrgestellnummer ab
→	Baujahr bis Fahrgestellnummer bis
→**Orga**	für Organisationsnummer bis

© 2022 Continental Aftermarket & Services GmbH

Technical translations

Technische Übersetzungen - Traducciones tecnicas - Traductions techniques - Traduzioni tecniche

ES	
	Cilindro principal de freno
	Cilindro receptor, embrague
	Tubo flexible de frenos
	Cable de accionamiento, freno de estacionamiento
	Juego de zapatas de frenos, freno de estacionamiento
	Pinza de freno
	Juego de pastillas de freno
	Disco de freno
	Cilindro de freno de rueda
	Sensor, revoluciones de la rueda
	Juego de zapatas de frenos
	Eje trasero izquierda
	Eje trasero, derecha
	Atrás izquierda
	Atrás derecha
	Eje delantero, izquierda
	Eje delantero, derecha
→ for DAM number up to	para número DAM hasta
+ ABS	para vehículos con ABS
+ AUT	con reajuste automático

ES	
+ eFSB	Pinza del freno con accionador con freno de detención electr para vehículos con freno de estacionamiento electrónico
+ EMot	con electromotor
+ ESP	para vehículos con ESP
+ EU	Europa
+ FSB	Pinza con freno estacionamiento integrado
+ HEB	con palanca
+ H mm	Altura de construcción [mm]
+ Performance Parts	para vehículos con frenos alto rendimiento
+POC	para POC
+PR	Número de PR
+ RUS	Rusia
+ RZ	con cilindro de freno de rueda
+ S	con tornillos
+ TR	Turquía
+ WE	preparado para indicador desgaste
+ WK	con contacto avisador de desgaste con avisador acústico de desgaste
+ Zub	con accesorios
14"	14"
15"	15"
16"	16"
17"	17"
18"	18"
19"	19"
20"	20"
4-Speed Automatic Transmission	Automática, 4 vel.
6-Speed Manual Transmission	Manual, 6 vel.
- ABS	para vehículos sin ABS
adjusting nut	Denominación adicional del artículo, tuerca de ajuste
ADV	Sistema de frenos, Advics
AKE	Sistema de frenos, Akebono

© 2022 Continental Aftermarket & Services GmbH

Technical translations

Technische Übersetzungen - Traducciones tecnicas - Traductions techniques - Traduzioni tecniche

ES	
ALU	Aluminio
AP	Sistema de frenos, AP Lockheed
ATE Ceramic	Denominación adicional del artículo, ATE Ceramic
Automatic Transmission	Transmisión automática
B	revestido
B1=	Ancho 1 [mm]
B2=	Ancho 2 [mm]
BDX	Sistema de frenos, Bendix
Black	negro
Bolt Hole Circle Ø [mm]	corona de agujeros - Ø [mm]
Bore Ø [mm]	Taladro Ø [mm]
BOS	Sistema de frenos, Bosch
Brake Caliper Colour	Color pinza freno
Brake Disc Thickness [mm]	Espesor de disco de frenos [mm]
Brake Size	Tamaño freno
BRE	Sistema de frenos, Brembo
Cast Aluminium	Fundición de aluminio
CB compatible package	Embalaje apto para autoservicio
Centering Diameter [mm]	Diámetro de centrado [mm]
Codes of set object definitions	Codes der gesetzten Objektdefinitionen
Country specific package and status data	Información específica del país sobre el embalaje y sobre el estado
Czech Republic	República Checa
Disc Brake	Discos
- eFSB	para vehículos sin freno de estacionamiento electrónico
Electric	eléctrico

ES	
Engine Code	Código de motor
- ESP	para vehículos sin ESP
Flange Hole Diameter [mm]	Diám. taladro brida [mm]
for article number	para artículo nr.
for brake disc diameter [mm]	para diámetro disco de freno [mm]
for brake disc thickness [mm]	para espesor de disco [mm]
for cruise control system	para instalación reguladora de velocidad
for dual tyres	para neumáticos gemelos
for extended wheelbase	para distancia entre ejesprolongada
for facelift	para facelift
for government vehicles	para vehículos admon. pública
for increased payload	para carga útil aumentada
for individual equipment ID	para ID equiüpamiento individual
for left-hand drive vehicles	para vehic. dirección izquierda
for police vehicles	para vehículo de policía
for right-hand drive vehicles	para vehíc. dirección a la derecha
for shortened wheelbase	para distancia entre ejes acortada
for taxis	para taxis
for vehicles with 3rd seating row	para vehículos con 3 hileras de asientos
for vehicles with active steering	para vehículos con dirección activa

© 2022 Continental Aftermarket & Services GmbH

Technical translations

Technische Übersetzungen - Traducciones tecnicas - Traductions techniques - Traduzioni tecniche

ES	
for vehicles with aerodynamic pack	para vehículos con paquete aerodinámico
for vehicles with air conditioning	para vehículos con climatizador
for vehicles with AMG Sports Package	para vehículos con paquete sport AMG
for vehicles with autom. distance control	para vehículos con regulación automática de distancia
for vehicles with disc brakes on the rear axle	para vehículos con freno de disco en eje trasero
for vehicles with drum brakes on the rear axle	para vehículos con freno de tambor en eje trasero
for vehicles with heavy duty suspension	para vehículos con chasis reforzado
for vehicles with height-adjustable suspension	para vehículos con chasis de altura ajustable
for vehicles with M-sport brakes	Para vehículos con frenos deportivos M
for vehicles with M-technology	para vehículos con técnica M
for vehicles without 3rd seating row	para vehículoos sin 3 hileras de asientos
for vehicles without aerodynamic pack	para vehículos sin paquete aerodinámico
for vehicles without AMG sports package	para vehículos sin paquete deportivo AMG

ES	
for vehicles without ceramic brakes	para vehículos sin frenos de cerámica
for vehicles without four wheel steering	para vehículos sin dirección en las 4 ruedas
for vehicles without heavy duty suspension	para vehículos sin chasis reforzado
for vehicles without M-sport brakes	Para vehículos sin frenos deportivos M
for vehicles without M-technology	para vehículos sin técnica M
for vehicles without sports brake system	para vehículos sin sistema de frenos deportivos
for vehicles without sports package	para vehículos sin paquete sport
for vehicles without sports suspension	para vehículos sin chasis deportivo
for vehicles without start-stop function	para vehículos sin sistema Start&Stop
for vehicles without technology package	para vehículos sin paquete técnico
for vehicles without towbar	para vehículos si enganche de remolque
for vehicles with parking assistant system	para vehículos con auxiliar de aparcamiento
for vehicles with reinforced brakes	para vehículos con freno reforzado

© 2022 Continental Aftermarket & Services GmbH

Technical translations

Technische Übersetzungen - Traducciones tecnicas - Traductions techniques - Traduzioni tecniche

ES	
for vehicles with single rear axle	para vehículos con neumático simple trasero
for vehicles with sports brake system	para vehículos con sistema de frenos deportivos
for vehicles with sports package	para vehículos con paquete sport
for vehicles with sports suspension	para vehículos con chasis deportivo
for vehicles with start-stop function	para vehículos con sistema Start&Stop
for vehicles with tech-nology package	para vehículos con paquete técnico
for vehicles with towbar	para vehículos con enganche de remolque
France	Francia
GG	Pinza de frenos de hierro fundido Fundición gris
Grey	gris
HC	altamente carbonizado
HC L	aleado/alt. carburado
- HEB	sin palanca
Height [mm]	Altura [mm]
Height 1 [mm]	Altura 1 [mm]
Height 2 [mm]	Altura 2 [mm]
Hub Diameter [mm]	Diamétro cubo[mm]
Inner Br. Drum Diam. [in]	Diám. tambor freno int [inch]
Japan	Japón
L=	Longitud [mm]
L=	Longitud total [mm] Longitud de cable [mm] Longitud contacto de aviso
L1=	Longitud 1 [mm]
L2=	Longitud 2 [mm]

ES	
Machining	Procesamiento
MAN	Sistema de frenos, Mando
Manual Transmission	Caja de cambios manual
Minimum thickness [mm]	Espesor mínimo [mm]
not for equip-ment variant	no para variante de equipamiento
not for government vehicles	no para veh. admon. pública
not for increased payload	no para carga útil aumentada
not for motor home	no para autocaravana
not for police vehicles	no para veh.policía
not for rim size [in]	no para dimensión de llantas
not for special-purpose vehicles	no para veh. especiales
not for taxis	no para taxis
not for vehi-cles with reinforced brakes	no para vehículos con frenos refor-zados
Number of Doors	Número de puertas
Number of Holes	Número de orificios
Observe dimensions	Observar dimensiones
Orga →	para números de organización desde
Outer	exterior
Part number of recom-mended accessories	Nº art. de accesorio recomendado
Payload [kg]	Carga útil [kg]
Payload from [kg]	carga útil desde [kg]

© 2022 Continental Aftermarket & Services GmbH

Technical translations

Technische Übersetzungen - Traducciones tecnicas - Traductions techniques - Traduzioni tecniche

ES	
Payload to [kg]	carga útil hasta [kg]
- Performance Parts	para vehículos sin frenos alto rendimiento
Piston Diameter [mm]	Diámetro del pistón [mm]
Plastic	Plástico
Plug Type ID	ID del modelo de conector
PowerDisc	Denominación adicional del artículo, PowerDisc
-PR	no para el numero PR
Pre-assembled	premontado
Red	rojo
replacement part	Recambio
Rigid Axle	Eje rígido
Rim Hole Number	Llanta, nº de taladros
Rim Size [in]	Tamaño de llanta [in]
Service exchange part	Pieza de intercambio
Silver	plateado
Slovakia	República eslovaca
Spanner size 1 [mm]	Ancho de llave 1 [mm]
Spanner size 2 [mm]	Ancho de llave 2 [mm]
SUM	Sistema de frenos, Sumitomo
Surface	Superficie
Thickness [mm]	Espesor [mm]
Thickness 1 [mm]	Espesor/grosor 1 [mm]
Thickness 2 [mm]	Espesor/grosor 2 [mm]
TopKit original ATE	Denominación adicional del artículo, TopKit original ATE
Transmission Type	Tipo de caja de cambios
TRW	Sistema de frenos, Lucas / TRW
Type	Tipo

ES	
Ultra Marine Blue	azul ultramar
usage number	Número de uso
Vehicle Production Country	País producción vehículo
- WE	no preparado para indicador de desgaste
Wheelbase [mm]	Distancia entre ejes [mm]
Width [mm]	Ancho [mm]
with anti-squeak plate	Chapa antichirridos
with brake caliper screws	con tornillos pinza freno
with hollow screw	con tornillo hueco
without brake fluid reservoir	sin depósito líquido frenos
without brake pads	sin forro de frenos
without cable	sin cable
with seal	con junta
- WK	excl. contacto de avisador de desgaste
x	cantidad indicadores de desgaste [por eje] Número de conexiones
Yes	sí
Ø	Diámetro [mm] Diámetro interior [mm] Diámetro exterior [mm] Diám. int. tambor freno [mm]
Ø1	Diámetro 1 [mm]
Ø2	Diámetro 2 [mm]
→	año construcción desde nº de chasis desde
→	año construcción hasta nº de chasis hasta
→**Orga**	para n.º de org. hasta

© 2022 Continental Aftermarket & Services GmbH

Technical translations

Technische Übersetzungen - Traducciones tecnicas - Traductions techniques - Traduzioni tecniche

FR	
	Maître-cylindre de frein
	Cylindre récepteur, embrayage
	Flexible de frein
	Tirette à câble, frein de stationnement
	Jeu de mâchoires de frein, frein de stationnement
	Étrier de frein
	Kit de plaquettes de frein, frein à disque
	Disque de frein
	Cylindre de roue
	Capteur, vitesse de roue
	Jeu de mâchoires de frein
	Essieu arrière gauche
	Essieu arrière droit
	arrière gauche
	arrière droite
	Essieu avant gauche
	Essieu avant droit
→ for DAM number up to	pour numéro DAM jusqu'à
+ ABS	pour véhicules avec système antiblocage
+ AUT	avec réglage automatique

FR	
+ eFSB	Étrier de frein + élément d'ajustage pr frein de stationnemt pour véhicules avec frein d'arrêt électrique
+ EMot	avec moteur électrique
+ ESP	pour véhicules avec ESP
+ EU	Europe
+ FSB	Étrier de frein avec frein de stationnement intégré
+ HEB	avec levier
+ H mm	Hauteur de construction [mm]
+ Performance Parts	pour véhicule avec frein Performance
+POC	pour POC
+PR	pour numéro PR
+ RUS	Russie
+ RZ	avec cylindre de roue
+ S	avec vis/boulons
+ TR	Turquie
+ WE	préparé pour indicateur d'usure
+ WK	contact de signal d'usure inclu avec indicateur d'usure
+ Zub	avec accessoires
14"	14"
15"	15"
16"	16"
17"	17"
18"	18"
19"	19"
20"	20"
4-Speed Automatic Transmission	Boîte automatique à 4 vitesses
6-Speed Manual Transmission	Boîte de vitesses manuelle à 6 vitesses
- ABS	pour véhicules sans système antiblocage
adjusting nut	Designation d'article complémentaire, écrou de réglage
ADV	Système de freinage, Advics

© 2022 Continental Aftermarket & Services GmbH

Technical translations

Technische Übersetzungen - Traducciones tecnicas - Traductions techniques - Traduzioni tecniche

FR	
AKE	Système de freinage, Akebono
ALU	Aluminium
AP	Système de freinage, AP Lockheed
ATE Ceramic	Designation d'article complémentaire, ATE Ceramic
Automatic Transmission	Boîte automatique
B	revêtu
B1=	Largeur 1 [mm]
B2=	Largeur 2 [mm]
BDX	Système de freinage, Bendix
Black	noir
Bolt Hole Circle Ø [mm]	Cercle de percage -Ø [mm]
Bore Ø [mm]	Alésage-Ø
BOS	Système de freinage, Bosch
Brake Caliper Colour	Couleur de l'étrier
Brake Disc Thickness [mm]	Épaisseur du disque de frein [mm]
Brake Size	Dimension des freins
BRE	Système de freinage, Brembo
Cast Aluminium	Fonte d'aluminium
CB compatible package	Emballage LS
Centering Diameter [mm]	Diamètre du centrage [mm]
Codes of set object definitions	Codes der gesetzten Objektdefinitionen
Country specific package and status data	Informations d'emballage et d'état spécifiques aux pays
Czech Republic	République tchèque
Disc Brake	Frein à disque
- eFSB	pour véhicules sans frein d'arrêt électrique

FR	
Electric	électrique
Engine Code	Code moteur
- ESP	pour véhicules sans ESP
Flange Hole Diameter [mm]	Diamètre du trou de bride [mm]
for article number	pour référence
for brake disc diameter [mm]	pour diamètre du disque de frein [mm]
for brake disc thickness [mm]	pour epaisseur de disque de frein [mm]
for cruise control system	pour régulateur de vitesse
for dual tyres	pour pneus doubles
for extended wheelbase	pour empattement rallongé
for facelift	pour facelift
for government vehicles	pour véhicules d'administration
for increased payload	pour charge utile surélevée
for individual equipment ID	pour ID d'équipement individuel
for left-hand drive vehicles	pour véhicules avec direction à gauche
for police vehicles	pour voitures de police
for right-hand drive vehicles	pour véhicules avec direction à droite
for shortened wheelbase	pour empattement raccourci
for taxis	pour taxis
for vehicles with 3rd seating row	pour véhicules avec 3ième rangée de sièges
for vehicles with active steering	pour véhicules avec direction active

© 2022 Continental Aftermarket & Services GmbH

Technical translations

Technische Übersetzungen - Traducciones tecnicas - Traductions techniques - Traduzioni tecniche

FR	
for vehicles with aerodynamic pack	pour véhicules avec un emballage d'aérodynamique
for vehicles with air conditioning	pour véhicules avec système de climatisation
for vehicles with AMG Sports Package	pour véhicules avec équipement-sport AMG
for vehicles with autom. distance control	pour véhicules avec régulation de distance autom.
for vehicles with disc brakes on the rear axle	pour véhicules avec frein à disques à l'essieu arrière
for vehicles with drum brakes on the rear axle	pour véhicules avec frein à tambour à l'essieu arrière
for vehicles with heavy duty suspension	pour véhicules avec châssis renforcé
for vehicles with height-adjustable suspension	pour véhicules avec suspension réglable en hauteur
for vehicles with M-sport brakes	pour véhicules avec système de freinage sport M
for vehicles with M-technology	pour véhicules avec la technique M
for vehicles without 3rd seating row	pour véhicules sans 3ième rangée de sièges
for vehicles without aerodynamic pack	pour véhicules sans emballage d'aérodynamique
for vehicles without AMG sports package	pour véhicules sans paquet-sport AMG

FR	
for vehicles without ceramic brakes	pour véhicules sans frein en céramique
for vehicles without four wheel steering	pour véhicules sans direction par quatre roues
for vehicles without heavy duty suspension	pour véhicules sans châssis renforcé
for vehicles without M-sport brakes	pour véhicules sans système de freinage sport M
for vehicles without M-technology	pour véhicules sans la technique M
for vehicles without sports brake system	pour véhicules sans système de freinage sport
for vehicles without sports package	pour véhicules sans équipement sport
for vehicles without sports suspension	pour véhicules sans châssis sportif
for vehicles without start-stop function	pour véhicules sans fonction Stop/Start
for vehicles without technology package	pour véhicules sans pack Technik
for vehicles without towbar	pour véhicules sans attelage de remorque
for vehicles with parking assistant system	pour véhicules avec assistance parctronic
for vehicles with reinforced brakes	pour véhicules avec frein assisté

© 2022 Continental Aftermarket & Services GmbH

Technical translations

Technische Übersetzungen - Traducciones tecnicas - Traductions techniques - Traduzioni tecniche

FR	
for vehicles with single rear axle	pour véhicules avec pneus simples à l'arrière
for vehicles with sports brake system	pour véhicules avec système de freinage sport
for vehicles with sports package	pour véhicules avec équipement sport
for vehicles with sports suspension	pour véhicules avec châssis sportif
for vehicles with start-stop function	pour véhicules avec fonction Stop/Start
for vehicles with tech-nology package	pour véhicules avec pack Technik
for vehicles with towbar	pour véhicules avec attelage de remorque
France	France
GG	Étrier de frein en fonte Fonte grise
Grey	gris
HC	à haute teneur en carbone
HC L	allié/carbonisé
- HEB	sans levier
Height [mm]	Hauteur [mm]
Height 1 [mm]	Hauteur 1 [mm]
Height 2 [mm]	Hauteur 2 [mm]
Hub Diameter [mm]	Diamètre du moyeu [mm]
Inner Br. Drum Diam. [in]	Diamètre int. tambour frein [pouce]
Japan	Japon
L=	Longueur [mm]
L=	Longueur globale Longueur de câble [mm] Longeur de contacts d'avertissment [mm]
L1=	Longueur 1 [mm]

FR	
L2=	Longueur 2 [mm]
Machining	Traitement
MAN	Système de freinage, Mando
Manual Transmission	boîte de vitesses manuelle
Minimum thickness [mm]	Épaisseur minimum [mm]
not for equip-ment variant	pas pour version d'équipement
not for government vehicles	pas pour véhicules de l'administration
not for increased payload	non pour charge utile surélevée
not for motor home	pas pour camping-cars
not for police vehicles	pas pour voitures de police
not for rim size [in]	pas pour dimension de jante [pouce]
not for special-purpose vehicles	pas pour véhicules spéciaux
not for taxis	pas pour taxis
not for vehi-cles with reinforced brakes	pas pour véhicules avec frein assisté
Number of Doors	Nombre de portes
Number of Holes	Nombre de trous
Observe dimensions	Respecter les dimensions
Orga →	pour numéro d'organisation à partir de
Outer	extérieur
Part number of recom-mended accessories	Référence de l'accessoire recommandé
Payload [kg]	Charge utile [kg]
Payload from [kg]	Charge utile à partir de [kg]

© 2022 Continental Aftermarket & Services GmbH

Technical translations

Technische Übersetzungen - Traducciones tecnicas - Traductions techniques - Traduzioni tecniche

FR	
Payload to [kg]	Charge utile jusqu'à [lb]
- Performance Parts	pour véhicules sans frein Performance
Piston Diameter [mm]	Diamètre du piston [mm]
Plastic	Matière plastique
Plug Type ID	ID de la version de la fiche
PowerDisc	Designation d'article complémentaire, PowerDisc
-PR	pas pour numéro PR
Pre-assembled	prémonté
Red	rouge
replacement part	Pièce de rechange
Rigid Axle	Essieu rigide
Rim Hole Number	Jante, nombre de trous
Rim Size [in]	Dimension de la jante [pouces]
Service exchange part	Echange standard
Silver	argent
Slovakia	République slovaque
Spanner size 1 [mm]	Largeur de clé 1 [mm]
Spanner size 2 [mm]	Largeur de clé 2 [mm]
SUM	Système de freinage, Sumitomo
Surface	Surface
Thickness [mm]	Épaisseur [mm]
Thickness 1 [mm]	Épaisseur 1 [mm]
Thickness 2 [mm]	Épaisseur 2 [mm]
TopKit original ATE	Designation d'article complémentaire, TopKit d'origine ATE
Transmission Type	Type de boîte de vitesses
TRW	Système de freinage, Lucas / TRW
Type	Modèle

FR	
Ultra Marine Blue	bleu ultra-marin (foncé)
usage number	Numéro d'utilisation
Vehicle Production Country	Pays constructeur du véhicule
- WE	non préparé pour indicateur d'usure
Wheelbase [mm]	Empattement [mm]
Width [mm]	Largeur [mm]
with anti-squeak plate	avec tôle anti-bruit
with brake caliper screws	avec vis d'étrier de frein
with hollow screw	avec vis creuse
without brake fluid reservoir	sans réservoir du liquide de frein
without brake pads	sans plaquettes de freins
without cable	sans câble
with seal	avec joint d'étanchéite
- WK	contact de signal d'usure exclu
x	Nombre d'indicateurs d'usure [par essieu] Nombre de connexions
Yes	Oui
Ø	Diamètre [mm] Diamètre intérieur [mm] Diamètre extérieur [mm] Diam. int. tambour frein [mm]
Ø1	Diamètre 1 [mm]
Ø2	Diamètre 2[mm]
→	Année à partir de Nº de châssis à partir de
→	Année jusqu'à Nº de châssis jusqu'à
→**Orga**	pour numéro d'organisation jusqu'à

© 2022 Continental Aftermarket & Services GmbH

Technical translations

Technische Übersetzungen - Traducciones tecnicas - Traductions techniques - Traduzioni tecniche

IT	
	Cilindro maestro del freno
	Cilindro secondario, Frizione
	Flessibile del freno
	Cavo comando, Freno stazionamento
	Kit ganasce, Freno stazionamento
	Pinza freno
	Kit pastiglie freno, Freno a disco
	Discofreno
	Cilindretto freno
	Sensore, N° giri ruota
	Kit ganasce freno
	Assale posteriore Sx
	Assale posteriore Dx
	posteriore Sx
	posteriore Dx
	Assale anteriore Sx
	Assale anteriore Dx
→ for DAM number up to	per numero DAM fino a
+ ABS	per veicoli con ABS
+ AUT	con regolazione automatica

IT	
+ eFSB	Pinza freno con regolatore per freno stazionamento elettrico per veicoli con freno stazionamento elettrico
+ EMot	con motore elettrico
+ ESP	per veicoli con ESP
+ EU	Europa
+ FSB	Pinza freno con freno-stazionamento integrato
+ HEB	con leva
+ H mm	Altezza da terra [mm]
+ Perform-ance Parts	per veicoli con freno Performance
+POC	per POC
+PR	per N° PR
+ RUS	Russia
+ RZ	con cilindretto freno
+ S	con bulloni/viti
+ TR	Turchia
+ WE	Predisposto per contatto segnalazione usura
+ WK	Con contatto segnalazione usura con segnalatore acustico usura
+ Zub	con accessori
14"	14"
15"	15"
16"	16"
17"	17"
18"	18"
19"	19"
20"	20"
4-Speed Automatic Transmission	Cambio automatico a 4 marce
6-Speed Manual Transmission	Cambio manuale a 6 marce
- ABS	per veicoli senza ABS
adjusting nut	Denominazione aggiuntiva dell'articolo, dado di regolazione
ADV	Sistema frenante, Advics

© 2022 Continental Aftermarket & Services GmbH

Technical translations

Technische Übersetzungen - Traducciones tecnicas - Traductions techniques - Traduzioni tecniche

IT	
AKE	Sistema frenante, Akebono
ALU	Alluminio
AP	Sistema frenante, AP Lockheed
ATE Ceramic	Denominazione aggiuntiva dell'articolo, ATE Ceramic
Automatic Transmission	Trasmissione automatica
B	rivestito
B1=	Larghezza 1 [mm]
B2=	Larghezza 2 [mm]
BDX	Sistema frenante, Bendix
Black	nero
Bolt Hole Circle Ø [mm]	Cerchio foro-Ø [mm]
Bore Ø [mm]	Alesaggio-Ø [mm]
BOS	Sistema frenante, Bosch
Brake Caliper Colour	Colore pinza freno
Brake Disc Thickness [mm]	Spessore disco freno [mm]
Brake Size	Misura freno
BRE	Sistema frenante, Brembo
Cast Aluminium	Alluminio pressofuso
CB compatible package	Imballaggio self-service
Centering Diameter [mm]	Diametro centraggio [mm]
Codes of set object definitions	Codes der gesetzten Objektdefinitionen
Country specific package and status data	Informazioni di imballaggio e di stato specifiche per i diversi Paesi
Czech Republic	Repubblica ceca
Disc Brake	Freno a disco
- eFSB	per veicoli senza freno stazionamento elettrico

IT	
Electric	elettrico
Engine Code	Codice motore
- ESP	per veicoli senza ESP
Flange Hole Diameter [mm]	Diametro foro flangia [mm]
for article number	per n° articolo
for brake disc diameter [mm]	per diametro disco freno [mm]
for brake disc thickness [mm]	per spessore disco freno [mm]
for cruise control system	per impianto regolazione velocità
for dual tyres	per pneumatici gemellati
for extended wheelbase	per passo allungato
for facelift	per Facelift
for government vehicles	per veicoli dell'amministrazione pubblica
for increased payload	per elevata portata utile
for individual equipment ID	per ID-equipaggiamento individuale
for left-hand drive vehicles	per veicolo con guida a Sx
for police vehicles	per veicoli della polizia
for right-hand drive vehicles	per veicolo con guida a Dx
for shortened wheelbase	per passo accorciato
for taxis	per taxi
for vehicles with 3rd seating row	per veicoli con 3ª fila sedili
for vehicles with active steering	per veicoli con meccanismo sterzo attivo

© 2022 Continental Aftermarket & Services GmbH

Technical translations

Technische Übersetzungen - Traducciones tecnicas - Traductions techniques - Traduzioni tecniche

IT	
for vehicles with aerodynamic pack	per veicoli con pacchetto aerodinamica
for vehicles with air conditioning	per veicoli con aria condizionata
for vehicles with AMG Sports Package	per veicoli con pacchetto sportivo AMG
for vehicles with autom. distance control	per veicoli con regolatore automatico distanza
for vehicles with disc brakes on the rear axle	per veicoli con freni a disco ad assale posteriore
for vehicles with drum brakes on the rear axle	per veicoli con freni a tamburo ad assale posteriore
for vehicles with heavy duty suspension	per veicoli con autotelaio rinforzato
for vehicles with height-adjustable suspension	per veicoli con autotelaio regolabile in altezza
for vehicles with M-sport brakes	per veicoli con freni sportivi M
for vehicles with M-technology	per veicoli con M-Technik
for vehicles without 3rd seating row	per veicoli senza 3ª fila sedili
for vehicles without aerodynamic pack	per veicoli senza pacchetto aerodinamica
for vehicles without AMG sports package	per veicoli senza pacchetto sportivo AMG

IT	
for vehicles without ceramic brakes	per veicoli senza freni in ceramica
for vehicles without four wheel steering	per veicoli senza quattro ruote sterzanti
for vehicles without heavy duty suspension	per veicoli senza autotelaio rinforzato
for vehicles without M-sport brakes	per veicoli senza freni sportivi M
for vehicles without M-technology	per veicoli senza M-Technik
for vehicles without sports brake system	per veicoli senza impianti frenante sportivo
for vehicles without sports package	per veicoli senza pacchetto sportivo
for vehicles without sports suspension	per veicoli senza autotelaio sportivo
for vehicles without start-stop function	per veicoli senza funzione di start-stop
for vehicles without technology package	per veicoli senza pacchetto Technik
for vehicles without towbar	per veicoli senza gancio traino
for vehicles with parking assistant system	per veicoli con sistema assistenza parcheggio
for vehicles with reinforced brakes	per veicoli con freno rinforzato

© 2022 Continental Aftermarket & Services GmbH

Technical translations

Technische Übersetzungen - Traducciones tecnicas - Traductions techniques - Traduzioni tecniche

IT	
for vehicles with single rear axle	per veicoli con pneumatico in singolo posteriore
for vehicles with sports brake system	per veicoli con impianto frenante sportivo
for vehicles with sports package	per veicoli con pacchetto sportivo
for vehicles with sports suspension	per veicoli con autotelaio sportivo
for vehicles with start-stop function	per veicoli con funzione di start-stop
for vehicles with technology package	per veicoli con pacchetto Technik
for vehicles with towbar	per veicoli con gancio traino
France	Francia
GG	Pinza freno in ghisa Ghisa grigia
Grey	grigio
HC	ad alto tenore di carbonio
HC L	legato /ad alto tenore di carbonio
- HEB	senza leva
Height [mm]	Altezza [mm]
Height 1 [mm]	Altezza 1 [mm]
Height 2 [mm]	Altezza 2 [mm]
Hub Diameter [mm]	Diametro mozzo [mm]
Inner Br. Drum Diam. [in]	Diam. int. tamburo freno [pollici]
Japan	Giappone
L=	Lunghezza [mm]
L=	Lunghezza totale [mm] Lunghezza cavo [mm] Lunghezza contatti di segnalazione [mm]
L1=	Lunghezza 1 [mm]

IT	
L2=	Lunghezza 2 [mm]
Machining	Lavorazione/Trattamento
MAN	Sistema frenante, Mando
Manual Transmission	Cambio manuale
Minimum thickness [mm]	Spessore min. [mm]
not for equipment variant	non per tipo equipaggiamento
not for government vehicles	Non per veicoli dell'amministrazione pubbl.
not for increased payload	Non per elevata portata utile
not for motor home	Non per camper
not for police vehicles	Non per mezzi della polizia
not for rim size [in]	non per misura cerchione [pollici]
not for special-purpose vehicles	Non per veicoli speciali
not for taxis	Non per taxi
not for vehicles with reinforced brakes	Non per veicoli con freno rinforzato
Number of Doors	N° portiere
Number of Holes	N° fori
Observe dimensions	Osservare le misure
Orga →	per numero organizzazione da
Outer	Esterno
Part number of recommended accessories	N° articolo accessorio consigliato
Payload [kg]	Portatautile [kg]
Payload from [kg]	Portata utile da [kg]

© 2022 Continental Aftermarket & Services GmbH

Technical translations

Technische Übersetzungen - Traducciones tecnicas - Traductions techniques - Traduzioni tecniche

IT	
Payload to [kg]	Portata utile fino a [kg]
- Performance Parts	per veicoli senza freno Performance
Piston Diameter [mm]	Diametro pistone [mm]
Plastic	Plastica
Plug Type ID	ID Tipo di spina
PowerDisc	Denominazione aggiuntiva dell'articolo, PowerDisc
-PR	non per n° PR
Pre-assembled	premontato
Red	rosso
replacement part	Ricambio di rotazione
Rigid Axle	Assale rigido
Rim Hole Number	Cerchione, N° fori
Rim Size [in]	Misura cerchione [pollici]
Service exchange part	Ricambio di rotazione
Silver	argento
Slovakia	Repubblica slovacca
Spanner size 1 [mm]	Apertura chiave 1 [mm]
Spanner size 2 [mm]	Apertura chiave 2 [mm]
SUM	Sistema frenante, Sumitomo
Surface	Superficie
Thickness [mm]	Spessore [mm]
Thickness 1 [mm]	Spessore 1 [mm]
Thickness 2 [mm]	Spessore 2 [mm]
TopKit original ATE	Denominazione aggiuntiva dell'articolo, TopKit originali ATE
Transmission Type	Tipo di trasmissione
TRW	Sistema frenante, Lucas / TRW
Type	Modello

IT	
Ultra Marine Blue	blu ultramarino
usage number	Codice d'uso
Vehicle Production Country	Paese produzione veicolo
- WE	Non predisposto per contatto segnalazione usura
Wheelbase [mm]	Passo ruote [mm]
Width [mm]	Larghezza [mm]
with anti-squeak plate	con lamierino anticigolío
with brake caliper screws	con bulloni pinza freno
with hollow screw	con vite cava
without brake fluid reservoir	senza serbatoio liquido freni
without brake pads	senza materiale d'attrito
without cable	senza cavo
with seal	con guarnizione
- WK	senza contatto segnalazione usura
x	N° indicatori usura [per asse] N° raccordi
Yes	Sì
Ø	Diametro [mm] Diametro interno [mm] Diametro esterno [mm] Diam. int. tamburo freno [mm]
Ø1	Diametro 1 [mm]
Ø2	Diametro 2 [mm]
→	Anno da N° telaio da
→	Anno fino a N° telaio fino a
→Orga	per numero organizzazione fino a

© 2022 Continental Aftermarket & Services GmbH

Notes

© 2022 Continental Aftermarket & Services GmbH

ATE – A Trademark of the Continental Corporation

Continental Aftermarket & Services GmbH

Sodener Straße 9
D-65824 Schwalbach
Tel. +49 (0) 6196 87 0
Fax +49 (0) 6196 865 71

www.ate.de

Continental Automotive Trading Italia S.r.l.

Via Matteotti, 62
I-20092 Cinisello Balsamo (MI)
Tel. +39 02 35680 1
Fax +39 02 35680 325
E-Mail: supporto@ continental-corporation.com

www.ate-freni.it

Continental Automotive France SAS

1 rue de Clairefontaine
F-78120 Rambouillet
Tél. +33 (0)1 34 57 40 19
Fax +33 (0)1 34 57 40 72

www.ate-freinage.fr

Continental Automotive Spain, S.A.

C/ Sepúlveda, 11
E-28108 Alcobendas (Madrid) Phone
+34 (0) 657 21 21
Fax +34 (0)91 657 21 49

www.frenos-ate.es